查询AT1454供应商

捷多邦，专业PCB打样工厂，24小时加急出货

Aimtron
圓創科技股份有限公司

AT1454/AT1454A/AT1454B

Preliminary Product Information

Photoflash Capacitor Charger for DSC

Feature

- 2.5V to 5.5V Supply Voltage Operating Range.
- Low Current Consumption:1mA in operation.
- Adjustable Output Voltage.
- Adjustable Switch On-Time.
- Charge Complete Indicator.
- Built-in IGBT Driver.
- Soft-Start Circuitry.
- Thermal Protection
- Charges Any Size Photoflash Capacitor.
- AT1454 with Auto-Refresh Function.
- AT1454A/B without Auto-Refresh Function.
- Small 10-lead MSOP Package.

Application

- Digital / Film Camera Flash
- PDA / Cell Phone Flash.

Description

The AT1454 series is a charger IC for Photoflash capacitor with soft-start function, an IGBT driver for igniting flash tube, adjustable output voltage and adjustable switch on-time to perform energy transition on each charge cycle. The output voltage can be adjusted by simply changing the turn ratio of transformer. AT1454B is sensed by voltage divider connecting to the anode of the rectifying diode. The voltage sensing path is cut off when charging function to be completed to maintain minimum output voltage decay.

The device allows user to control automatic refresh rate on Charge pin. While the Ready pin signals that the capacitor is fully charged.

AT1454/AT1454A/AT1454B is available in MSOP-10 package.

Block Diagram

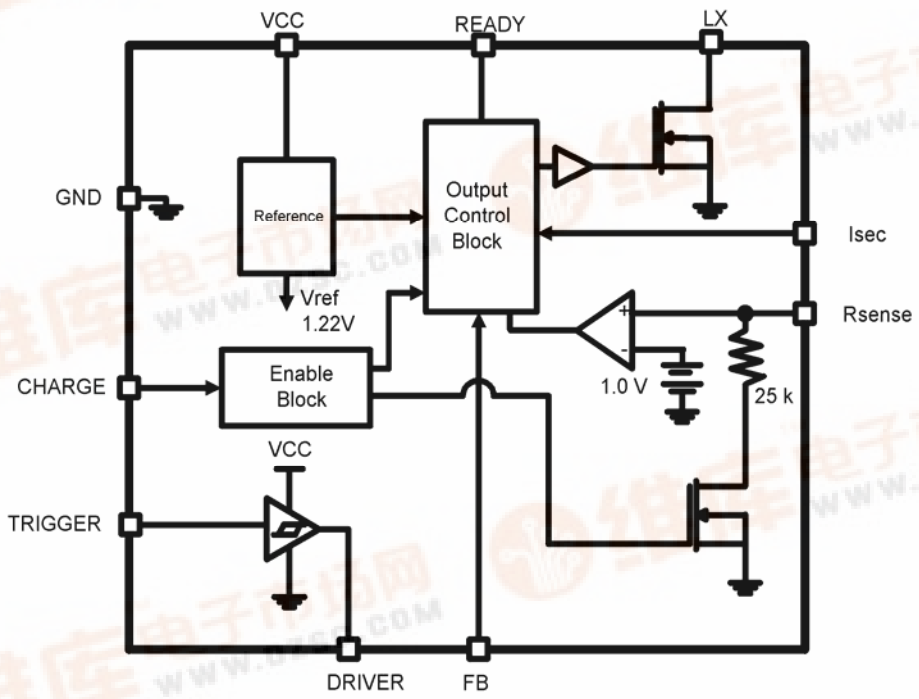

Aimtron reserves the right without notice to change this circuitry and specifications.

7F, No.9,PARK AVENUE. II, Science-Based Industrial Park, Hsinchu 300,Taiwan, R.O.C.
Tel: 886-3-563-0878 Fax: 886-3-563-0879 WWW: http://www.aimtron.com.tw
Email: service@aimtron.com.tw

找PDF 维库一下 pdf.dzsc.com

Pin Configuration

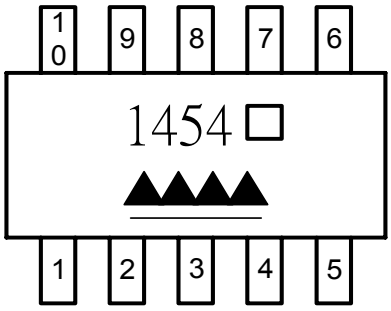

Ordering Information

Part number	Package	Marking
AT1454M_GRE	**MSOP-10 , Green**	**AT1454, Date code with one bottom line**
AT1454AM_GRE	**MSOP-10 , Green**	**AT1454A, Date code with one bottom line**
AT1454BM_GRE	**MSOP-10 , Green**	**AT1454B, Date code with one bottom line**

**For more marking information, contact our sales representative directly*

Pin Description

Pin N0.	Symbol	I / O	Description
1	CHARGE	I	Charge enable input
2	FB	I	Comparator input
3	TRIGGER	I	IGBT Trigger signal input.
4	I_{SEC}	I	Detecting transformer secondary current. Take care to use the correct phasing of the transformer.
5	GND	P	Ground
6	LX	I	Power MOSFET N-channel Drain. Connect Primary transformer. Take care to use the correct phasing of the transformer.
7	DRIVER	O	IGBT Driver output.
8	VCC	P	Power supply.
9	READY	O	Charge ready open drain output.
10	Rsense	I	A resistor from Rsense to VCC or V_{BAT} sets the constant On-time.

Absolute Maximum Ratings*1

Parameter		Rated Value	Unit
VCC , TRIGGER , DRIVER , CHARGE , FB and READY voltage		-0.3 to +6.0	V
LX voltage		+30	V
SEC Current		±300	mA
Continuous power dissipation (MSOP-10,Ta=+25°C)		555	mW
Junction Temperature		125	℃
Lead Temperature (Soldering 10 sec)		260	℃
Storage Temperature		-40~125	℃
ESD Susceptibility*2	HBM	2	KV
	MM	200	V

1. **Stresses beyond those listed under "Absolute Maximum Ratings" may cause permanent damage to the device. These are stress ratings only, and functional operation of the device at these or any other conditions beyond those indicated in the operational sections of the specifications is not implied. Exposure to absolute maximum rating conditions for extended periods may affect device reliability.**
2. **Device are ESD sensitive. Handling precaution recommended. The Human Body model is a 100pF capacitor discharged through a 1.5KΩ resistor into each pin.**

Recommended Operation Conditions

Parameter	Symbol	Values			Unit
		Min.	Typ.	Max.	
Power supply voltage	VCC	2.5	—	+5.5	V
Operating temperature	Top	-30	+25	+85	℃
LX voltage	V_{LX}	VCC	—	28	V

Electrical Characteristics

(VCC=3.3V, Ta=+25℃, unless otherwise noted)

Parameter	Symbol	Test Condition	Min.	Typ.	Max.	Units
Input operating voltage	VCC		2.5	—	5.5	V
Input under-voltage threshold	V_{UVLO}	VCC falling	—	2.1	—	V
VCC UVLO hysteresis			—	100	—	mV
Feedback voltage	V_{FB}	Ta=+25℃	1.08	1.10	1.12	V
Shutdown current	I_{OFF}	CHARGE pin=GND	—	0.01	1	μA
Quiescent Current	Icc	No Switching , FB=1.2V	—	40	60	μA
Primary side current limit	$I_{LX(MAX)}$		—	2.5	—	A
Secondary side transit current	Isec		—	5	—	mA
LX Switch On-Resistance	$R_{LX(ON)}$	I_{LX}=2A	—	0.17	—	Ω
LX Leakage Current	I_{LC}	V_{LX}=28V	—	0.01	6	μA
IGBT Driver Rising time	tr	VCC=3.3V, C_L=3900pF	—	55	—	ns
		VCC=3.3V, C_L=8200pF	—	90	—	ns
IGBT Driver Falling time	tf	VCC=3.3V, C_L=3900pF	—	55	—	ns
		VCC=3.3V, C_L=8200pF	—	90	—	ns
IGBT Trigger signal high			0.45Vcc	—	—	V
IGBT Trigger signal low			—	—	0.3Vcc	V
Charge input voltage high	V_{ON}	0.1V hysteresis	0.9	—	—	V
Charge input voltage low	V_{OFF}		—	—	0.8	V
Charge pin Bias current		V_{CHARGE}=3.3V	—	3	—	μA
Ready output signal high		100kΩ from Vcc to Ready pin	—	3.27	—	V
Ready output signal low		33μA into Ready pin	—	1.0	0	mV
Thermal Shutdown			—	140	—	℃

Timing Chart

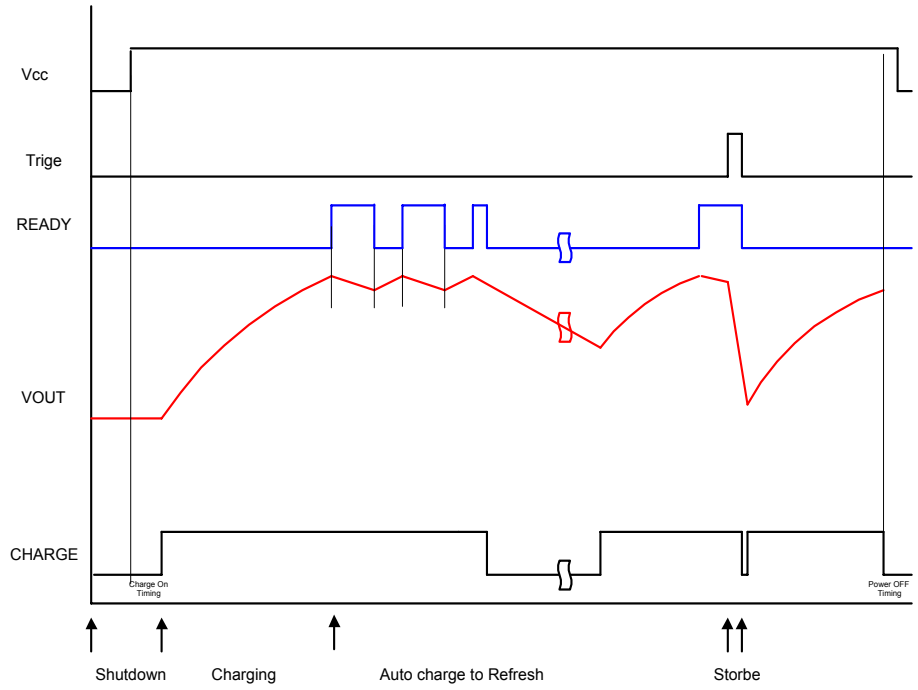

AT1454 Auto-Refresh Mode

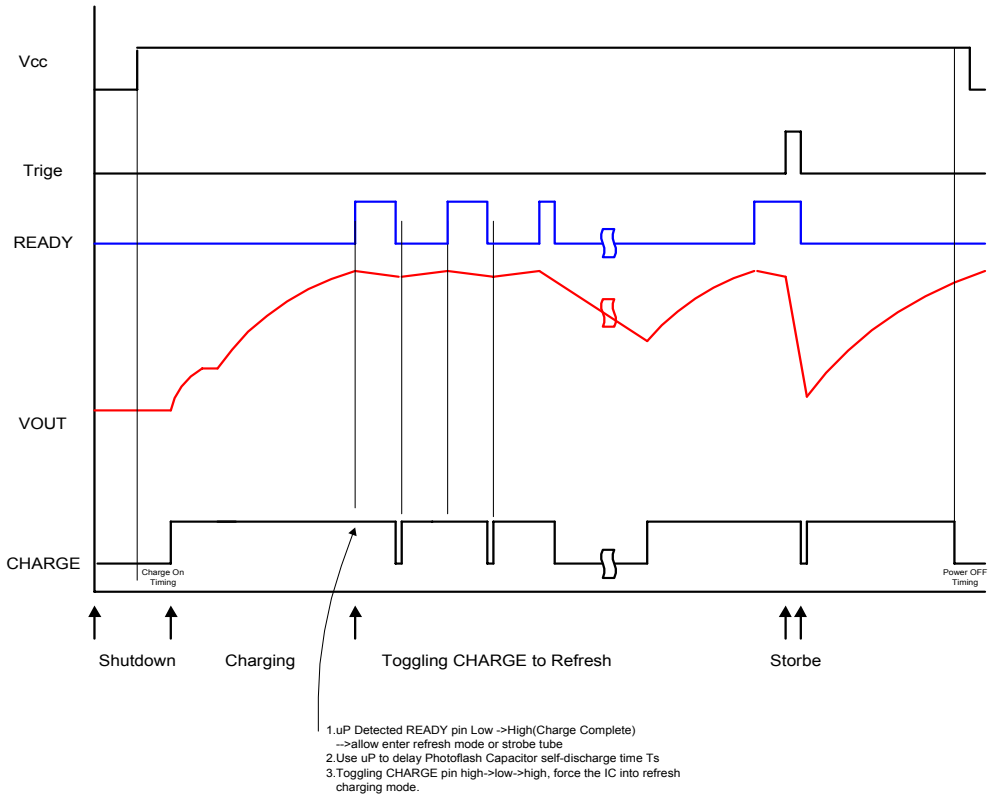

AT1454A/B Charge Toggle-Refresh (Soft-ware control)Mode

Typical Operating Characteristics

V_{LX} & Primary Current ，Time(1us/Div) [CH2:V_{LX}; CH4:I_{PRI}]

V_{LX}(5V/Div)

I_{PRI}(1A/Div)

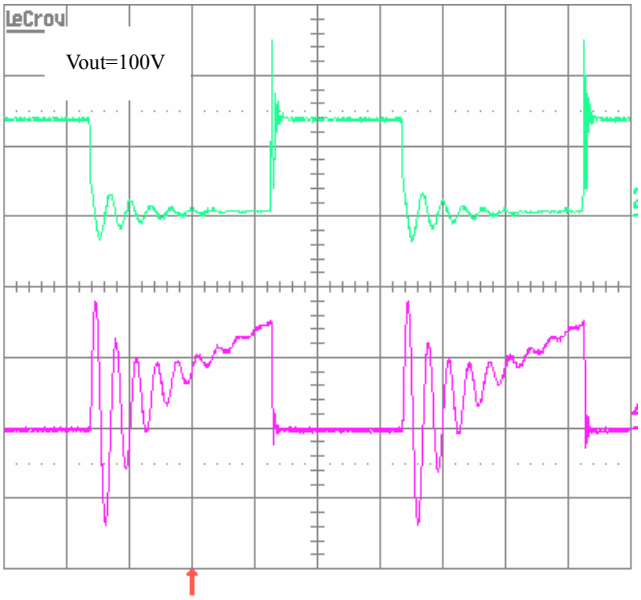

V_{LX} & Primary Current ，Time(1us/Div) [CH2:V_{LX}; CH4:I_{PRI}]

V_{LX}(10V/Div)

I_{PRI}(1A/Div)

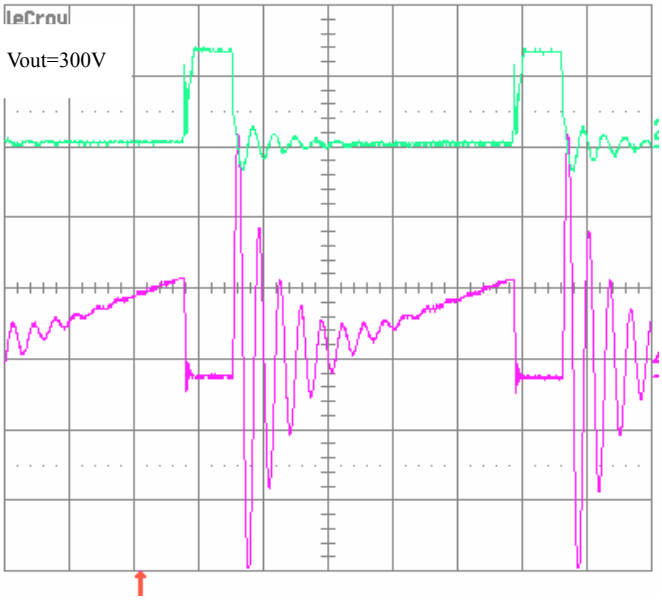

V_{LX} & Secondary Current ，Time(1us/Div) [CH2:V_{LX}; CH4:I_{SEC}]

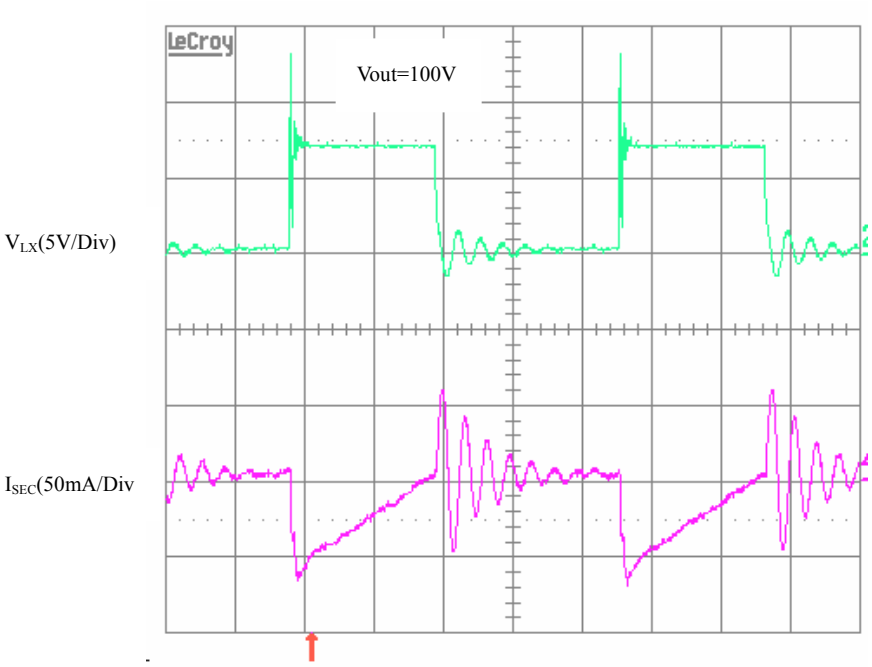

Charging waveform without auto-refresh function , Time(1 s/Div)
VCC=3.3V, V_{BAT}=4.2V, C=120uF

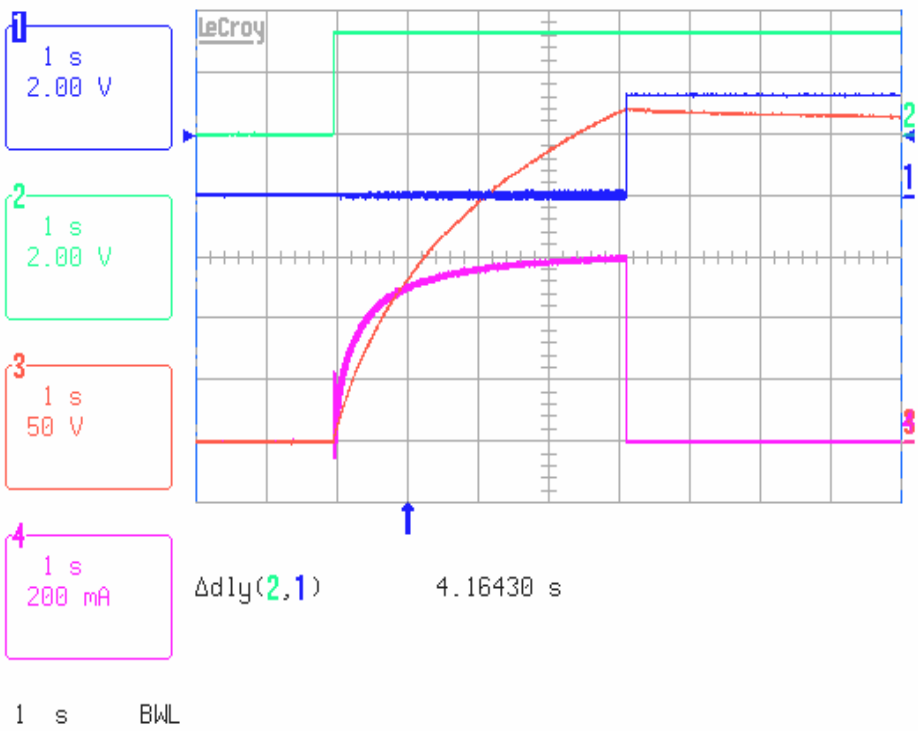

CH1:READY CH2:CHARGE CH3:Output Voltage CH4:Input Current

Charging waveform with auto-refresh function , Time(1 s/Div)

VCC=3.3V, V_{BAT}=3.0V, C=47uF

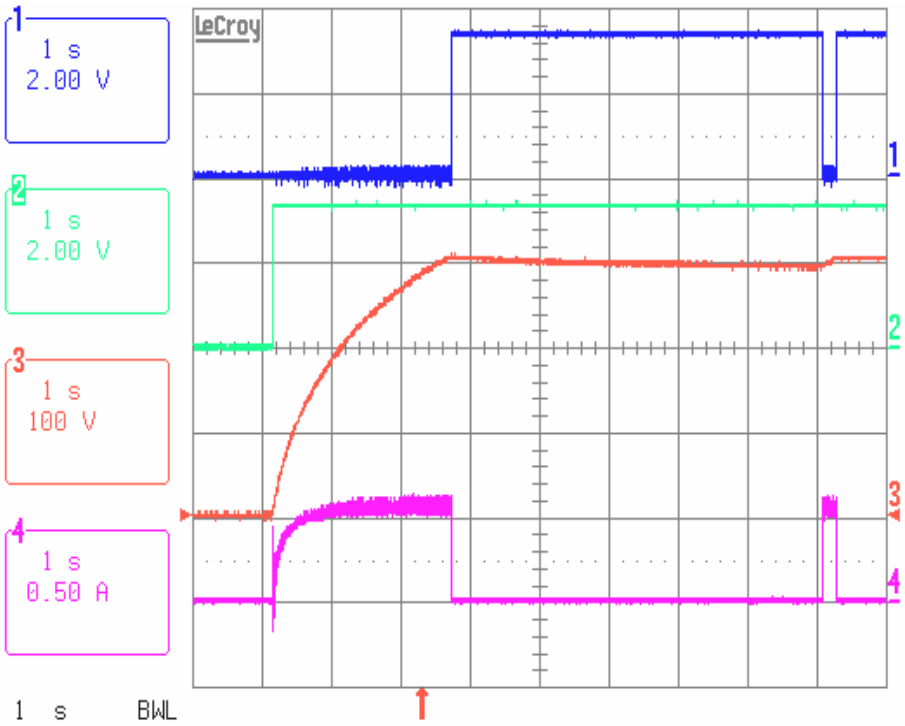

CH1:READY CH2:CHARGE CH3:Output Voltage CH4:Input Current

Application Circuit

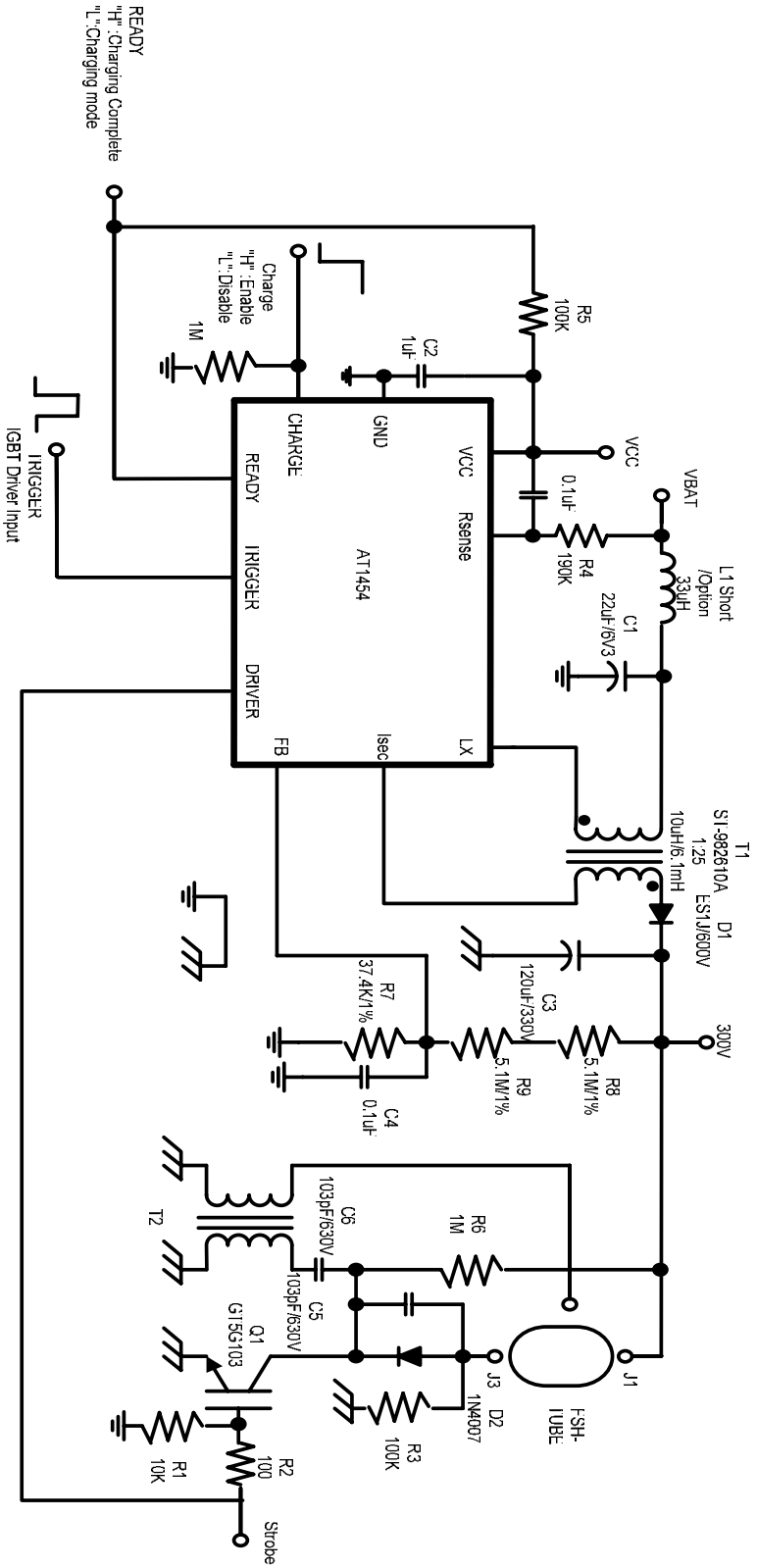

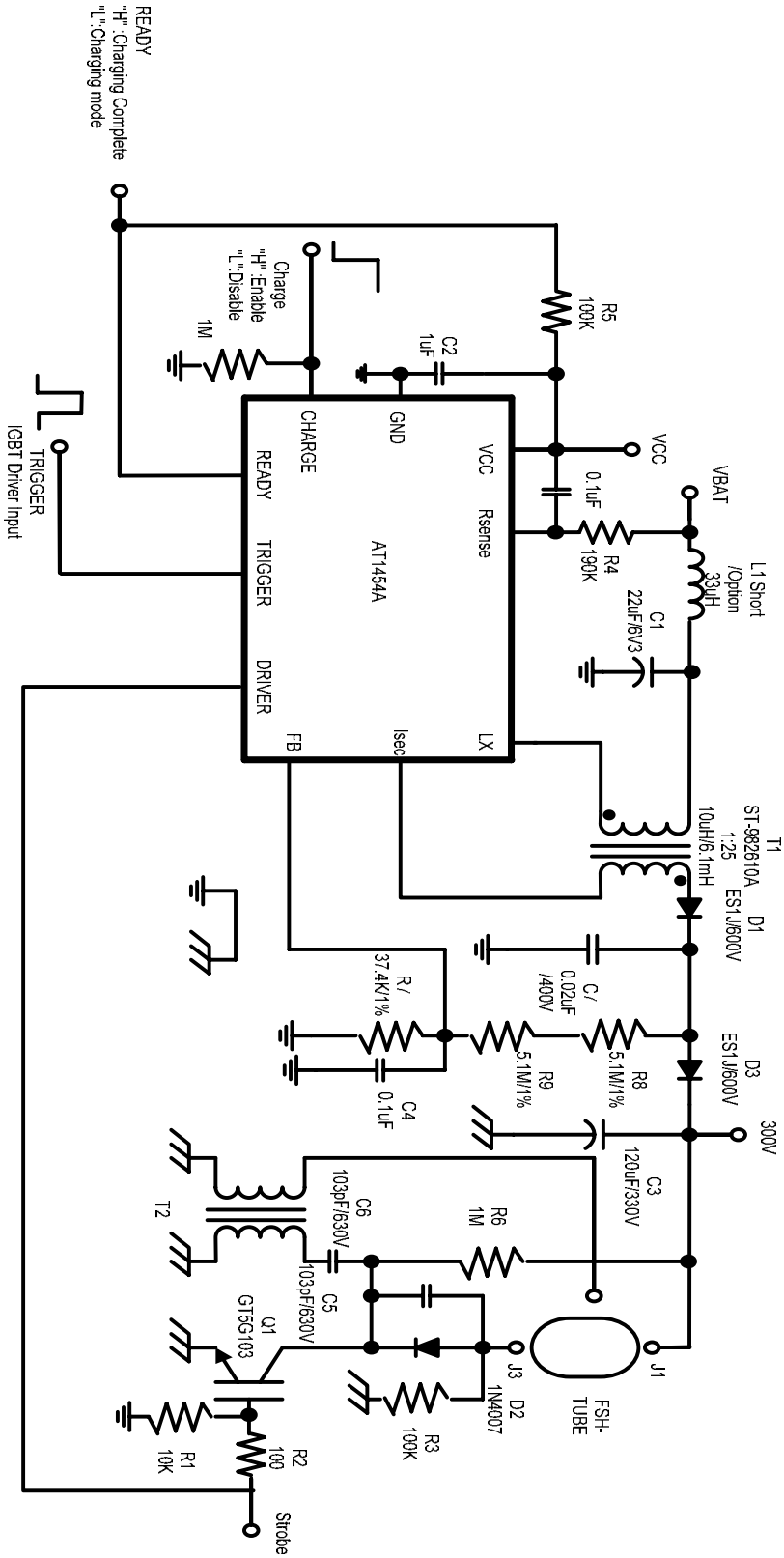
READY
"H" :Charging Complete
"L":Charging mode
Charge
"H" :Enable
"L":Disable
1M
R5
100K
C2
1uF
TRIGGER
IGBT Driver Input
CHARGE
GND
VCC
READY
TRIGGER
DRIVER
FB
AT1454A
Rsense
Isec
LX
VCC
0.1uF
R4
190K
VBAT
L1 Short
/Option
33uH
C1
22uF/6V3
T1
ST-982610A
1:25
10uH/6.1mH
D1
ES1J/600V
R/
37.4K/1%
C/
0.02uF
/400V
R9
5.1M/1%
R8
5.1M/1%
D3
ES1J/600V
C4
0.1uF
300V
C3
120uF/330V
T2
C6
103pF/630V
R6
1M
C5
103pF/630V
Q1
GT5G103
J3
D2
1N4007
J1
FSH-
TUBE
R3
100K
R1
10K
R2
100
Strobe

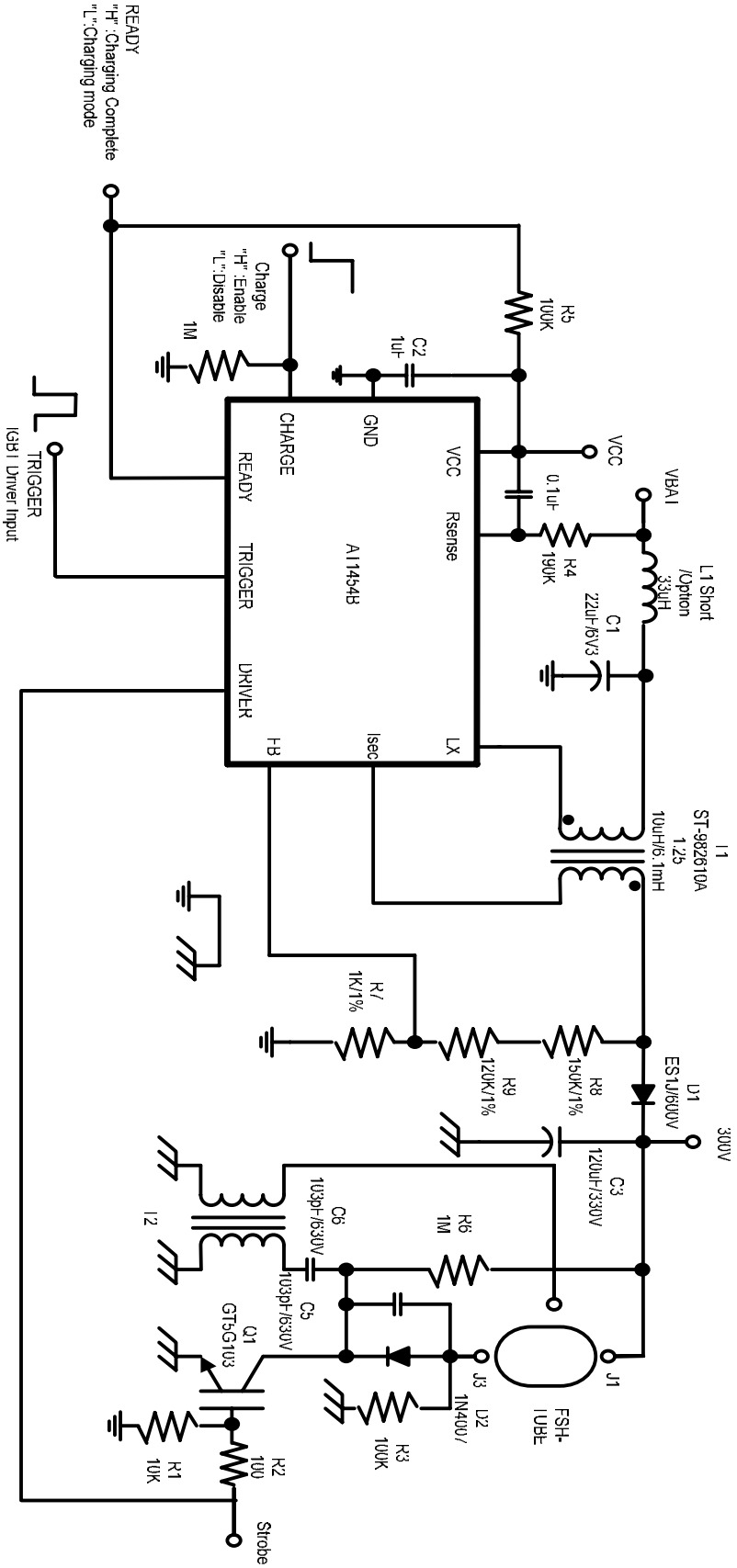
VCC
VBAT
L1 Short
/Option
33uH
C1
22uF/6V3
R4
190K
0.1uF
R5
100K
C2
1uF
GND
Rsense
VCC
CHARGE
READY
TRIGGER
DRIVER
AT1454B
FB
Isec
LX
Charge
"H":Enable
"L":Disable
1M
READY
"H":Charging Complete
"L":Charging mode
TRIGGER
(GB) Driver Input
T1
ST-982610A
1:25
10uH/6.1mH
R7
1K/1%
R9
120K/1%
R8
150K/1%
D1
ES1J/600V
300V
C3
120uF/330V
C6
103pF/630V
R6
1M
T2
C5
103pF/630V
Q1
GT5G103
J3
D2
1N4007
J1
FSH-
TUBE
R3
100K
R1
10K
R2
100
Strobe

Application Information

AT1454 series is designed to precise control of switching current to charge photoflash capacitors quickly and efficiently. When the Charge pin is first driven high, a one shot set SR latches in the correct state. The built-in power MOSFET turns on and primary current ramps up linearly according to V_{BAT} and primary inductance. Comparator monitors the switch On-time and when the switch on-time reaches limit value, MOSFET is turned off. During this phase, stored energy of primary transformer is delivered to the photoflash capacitor via the secondary and diode. The secondary current is decreased linearly at a rate determined by the secondary inductance. The secondary current is monitored by the Isec pin. When the secondary current drops below 10mA, the fires a one shot will turn on MOSFET. The charging cycle repeats to deliver power to the output.

AT1454 series can adjust external resistance R_{SENSE} to set N-MOS switch on-time, but switch on-time value must match with electrical characteristic of transformer. It is usually equal to or less than saturation current of transformer otherwise transformer will be saturated. Therefore, efficiency will be reduced.

The output voltage is detected by a voltage divider connecting to output capacitor. When the output voltage reaches the desired voltage set by resistive voltage-divider, comparator output goes high which resets the master latch and disable the charging block. The N-channel MOSFET is turned off pulling the Ready pin high, indicating that the part has finished charging. Power delivery can be restarted automatically when feedback voltage is less than 90% of reference voltage. Power delivery can only be restarted by toggling the Charge pin. The Charge pin gives full control of the part to the user. The IGBT buffer will provide a sufficient current to drive IGBT to ignite flash tube.

Transformer Design

The Fly-back transformer is a key element for AT1454 series. It must be designed carefully and checked that it does not cause excessive current or voltage on any pin of the part. The first transformer parameter that needs to be set is the turns ratio N, should be high enough so that the absolute maximum voltage rating for the NMOS drain to source voltage is not exceeded. Choose the minimum turns ratio according to following formula:

$$N_{MIN} \geq \frac{V_{OUT}}{V_{DS(MAX)} - V_{BAT}}$$

Vout: Target Output Voltage

$V_{DS(MAX)}$:Maximum drain to source voltage of NMOS.

Adjustable Output Voltage

The AT1454/1454A/B senses output voltage by a voltage divider connecting to output terminal. R7 to (R8+R9) ratio determines the output voltage as shown in the application circuit Figure 1. The feedback reference voltage is 1.1V. Calculate the remaining resistors with following equations:

$$V_{OUT} = V_{FB} \times (1 + \frac{R_8 + R_9}{R_7})$$

R8and R9 must be greater than 0805 size resistor for enduring secondary HV.

Rectifying Diode

The rectifying diode should be low capacitance type with sufficient reverse recovery-voltage and forward current ratings. The peak reverse recovery-voltage that diode is approximately:

$V_{PK-R} \cong V_{OUT} + (N \times V_{CC})$

The peak current of the diode is simply:

$I_{PK-SEC} = I_{PK-PRI} / N$

Primary Inductance

A fly-back transformer needs to store substantial amounts of energy in the core during each switching cycle. The transformer will generally require an air gap. The use of an air gap in the core makes the energy storage. While the power switch is off, energy transferred to the output capacitor is proportional to the primary inductance for a constant primary current. The primary inductance needs to be equal or larger than a certain minimum value to ensure that AT1454 series has adequate time to respond to the fly-back waveform. The switch off time should be 500ns or larger for the AT1454 series. The minimum inductance can be calculated with the following formula:

$$L_{PRI} \geq \frac{500 \times 10^{-9} \times V_{OUT}}{N \times I_{PK-PRI}}$$

Vout: Target Output Voltage

N: Transformer Turns Ratio

I_{PK-PRI}: Primary Peak Current

Leakage Inductance and Parasitic Capacitance

The leakage inductance on the primary of the transformer results in the first spike voltage when NMOS turns off. The spike voltage is proportional to the leakage inductance. The spike voltage must not exceed the dynamic rating of the NMOS drain to source voltage. It is important not to minimize the leakage inductance to a very low level. Although this would result in a very low leakage spike, the parasitic capacitance of the transformer will be high between windings. This will result in the initial spike of current in the primary becoming excessively high while the NMOS turns on. Therefore, trade off is necessary between leakage inductance and parasitic capacitance.

Spike Voltage @Switching，Time(1us/Div)

V_{LX}(5V/Div) , I_{PRI}(1A/Div)

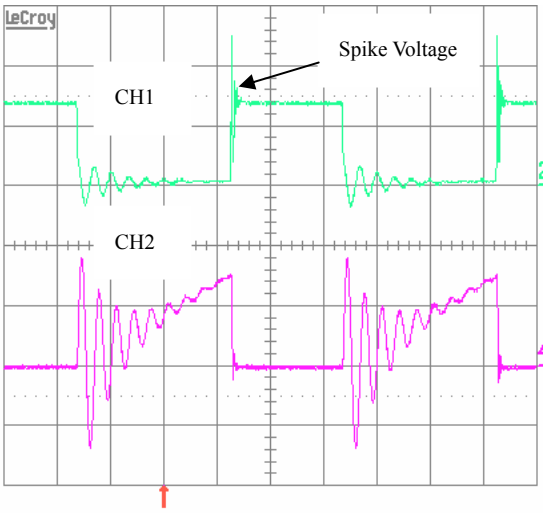

Swing Current @Switching，Time(1us/Div)

V_{LX}(10V/Div) , I_{PRI}(1A/Div)

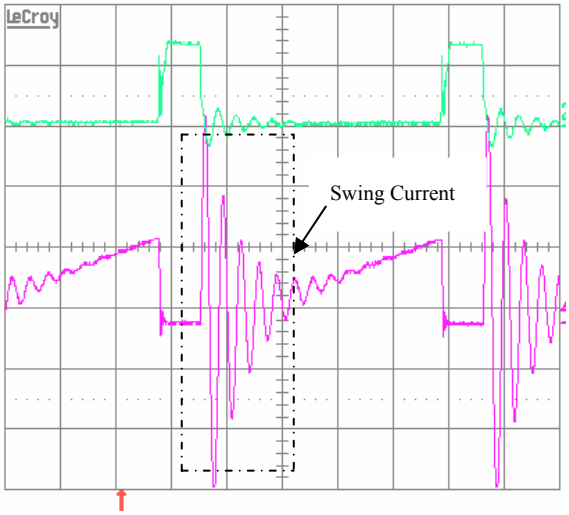

CH1:V_{LX}; CH2:Input Current

Transformer Secondary Capacitance

The total capacitance on the secondary of the transformer will severely affect the efficiency of the circuit. Any secondary capacitance is multiplied by N^2 when reflected to the primary. Since this capacitance forms a resonant circuit with the primary leakage inductance of the transformer. As such, both the primary leakage inductance and secondary side capacitance should be minimized.

Adjustable Input Current

The AT1454/1454A/B can adjust N-MOS switch on-time by a resistor connecting to Rsense pin. This resistor determines the primary peak current and on-time of primary N-MOS as the following equation:

$$I_{PK-PRI} = \frac{V_{BAT} \times 2 \times 10^{-6}}{V_{Rsense} \times L_{PRI}}, V_{Rsense} = V_{BAT}(or, V_{CC}) \times \frac{25K\Omega}{R_4 + 25K\Omega}$$

$$T_{ON} = \frac{I_{PK-PRI} \times L_{PRI}}{V_{BAT}}$$

where

L_{PRI}: primary inductance (μH)

I_{PK-PRI}: peak primary current (A)

R4: It is recommended several KΩ grade

If setting constant on-time by a resistor R10 is connected to VCC, then R4 resistor need to remove from application circuitry. In this case, on-time is a constant. At another topology, if R4 connect to VBAT to set constant on-time, then R10 need to remove from application circuitry. However, on-time can change dependent on VBAT because battery voltage level is different from full energy to low power. External capacitor Css is connected to VCC and Rsense to perform soft-start function to reduce inrush current on VBAT input current and avoid the internal switching noise.

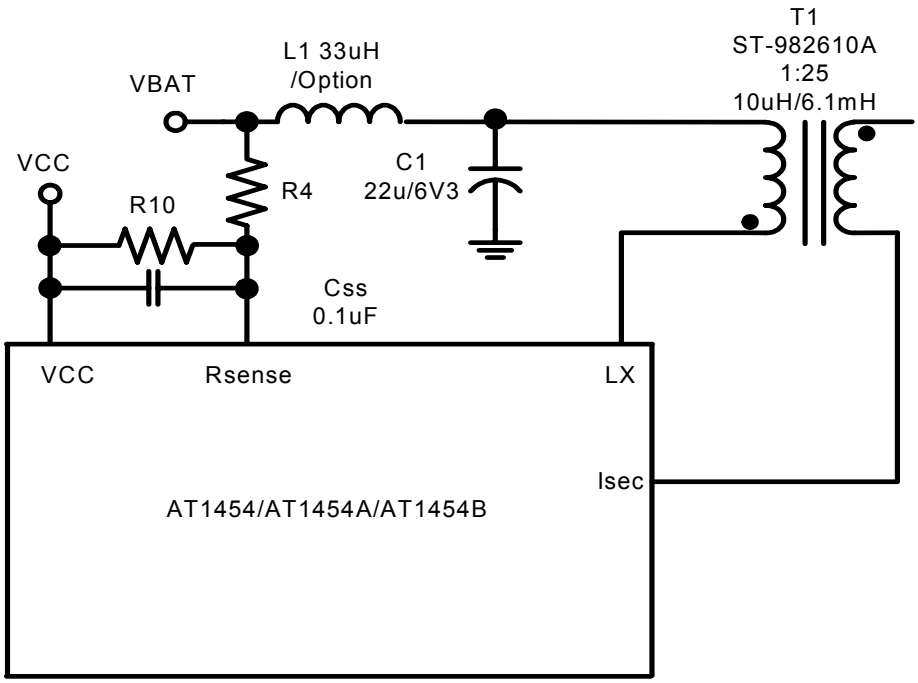

Auto-Refresh

AT1454 supports auto-refresh function required in some DCS application. When the output capacitor is charged complete, the READY pin will goes high and Vout will decrease slightly due to leakage current. The refresh block trip point is V_{FB}x90%. While the Vout is decreased to the refresh trip point, it enables the charge block, disable the refresh block and pull low the READY pin. This cycle of recharge operation will repeat again until charge pin is pulled low.

Thermal-Overload Protection

Thermal-overload protection limits total power dissipation in the AT1454 series. When the junction temperature exceeds Tj=140 ℃, a thermal sensor activates the thermal protection, which shuts down the IC, allowing the IC to cool. Once the device cools down by 15 ℃, IC will automatically recover normal operation. For continuous operation , do not exceed the absolute maximum junction-temperature rating of Tj=130 ℃.

Prevent the Leakage of READY pin

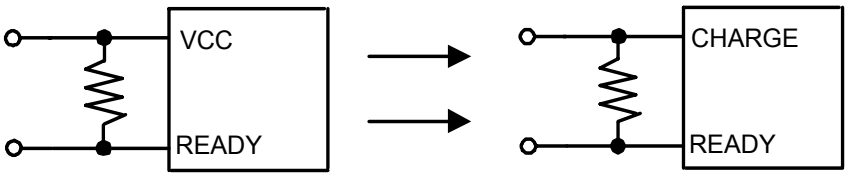

If pull-high resistor of READY signal connect to Charge pin, then it can reduce power consumption on pull-high resistor of READY during charge pin goes low.

Board Layout

The high voltage operation of the AT1454/AT1454A/AT1454B demands careful attention to board layout. You will not get advertised performance with careless layout. Keep the area for the high voltage end of the secondary as small as possible. Also note the larger than minimum spacing for all high voltage nodes in order to meet breakdown voltage requirements for the circuit board. Remember that lethal voltages are present in this circuit. Use caution when working with the circuit.

Outline 10-pin MSOP

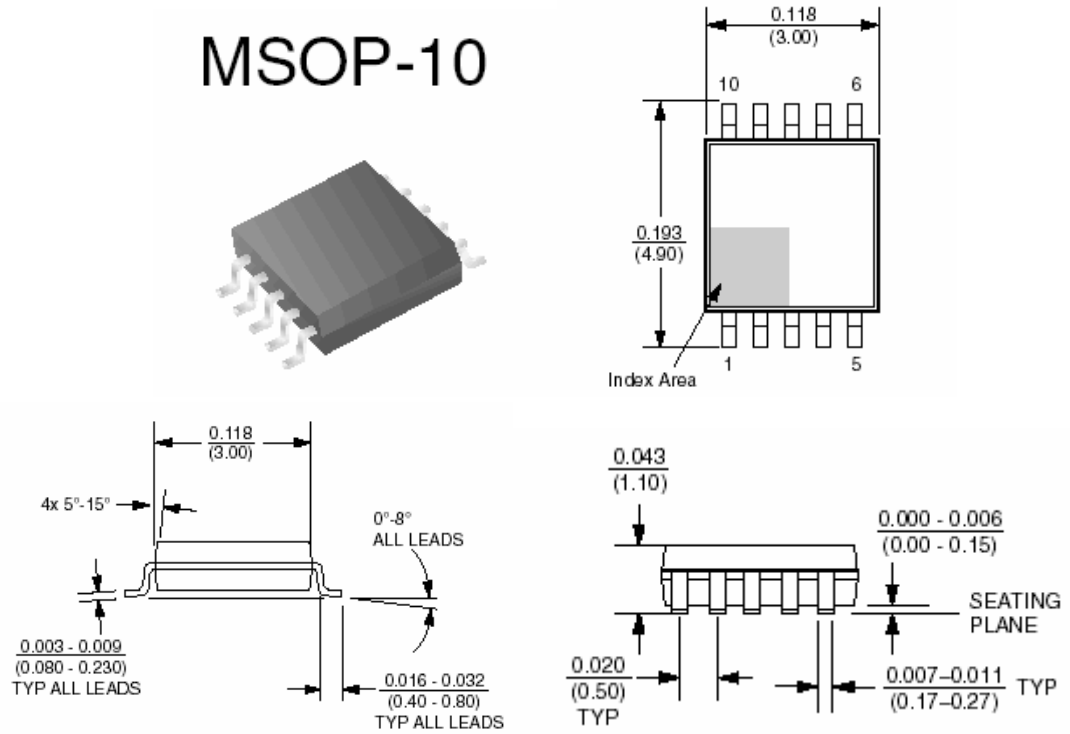

Reflow Profiles

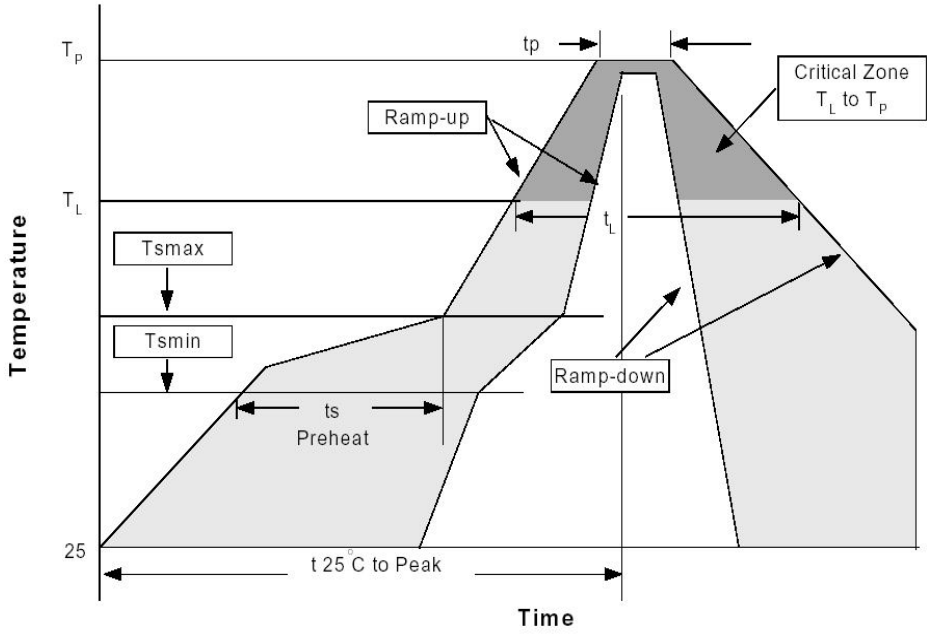

Profile Feature	Sn-Pb Eutectic Assembly		Pb-Free Assembly	
	Large Body Pkg. thickness ≥2.5mm or Pkg. volume ≥350mm^3	Small Body Pkg. thickness <2.5mm or Pkg. volume <350mm^3	Large Body Pkg. thickness ≥2.5mm or Pkg. volume ≥350mm^3	Small Body Pkg. thickness ≥2.5mm or Pkg. volume ≥350mm^3
Average ramp-up rate (T_L to T_P)	3°C/second max.		3°C/second max.	
Preheat -Temperature Min(Tsmin) -Temperature Max (Tsmax) -Time (min to max)(ts)	100°C 150°C 60-120 seconds		150°C 200°C 60-180 seconds	
Tsmax to T_L -Ramp-up Rate			3°C/second max.	
Time maintained above: -Temperature (T_L) -Time (t_L)	183°C 60-150 seconds		217°C 60-150 seconds	
Peak Temperature(T_P)	225+0/-5°C	240+0/-5°C	245+0/-5°C	250+0/-5°C
Time within 5°C of actual Peak Temperature (t_P)	10-30 seconds	10-30 seconds	10-30 seconds	20-40 seconds
Ramp-down Rate	6°C/second max.		3°C/second max.	
Time 25°C to Peak Temperature	6 minutes max.		8 minutes max.	

***All temperatures refer to topside of the package, measured on the package body surface.**