查询HT46R322供应商 捷多邦，专业PCB打样工厂，24小时加急出货

HOLTEK

HT46R322/HT46R342
A/D with OPA Type 8-Bit OTP MCU

Technical Document

- Tools Information
- FAQs
- Application Note
  - HA0003E Communicating between the HT48 & HT46 Series MCUs and the HT93LC46 EEPROM
  - HA0049E Read and Write Control of the HT1380
  - HA0051E Li Battery Charger Demo Board - Using the HT46R47
  - HA0052E Microcontroller Application - Battery Charger
  - HA0083E Li Battery Charger Demo Board - Using the HT46R46

Features

- Operating voltage:
  f_{SYS}=4MHz: 2.2V~5.5V
  f_{SYS}=8MHz: 3.3V~5.5V
- 36 bidirectional I/O lines (max.), including 16 LED driver with twice sink/source current
- Single interrupt input shared with an I/O line
- 8-bit programmable timer/event counter with overflow interrupt and 7-stage prescaler
- Integrated crystal and RC oscillator
- Watchdog Timer
- 2048×14 Program Memory capacity - HT46R322
  4096×15 Program Memory capacity - HT46R342
- 88×8 Data Memory capacity - HT46R322
  192×8 Data Memory capacity - HT46R342
- Integrated PFD function for sound generation
- Power-down and wake-up functions reduce power consumption
- Up to 0.5μs instruction cycle with 8MHz system clock at V_{DD}=5V
- 6-level subroutine nesting
- 4 channel 12-bit resolution A/D converter
- Integrated single operational amplifier or comparator selectable via configuration option
- Dual 8-bit PWM outputs shared with I/O lines
- Bit manipulation instruction
- Full table read instruction
- 63 powerful instructions
- All instructions executed in one or two machine cycles
- Low voltage reset function
- 44-pin QFP package

General Description

The HT46R322 and HT46R342 are 8-bit, high performance, RISC architecture microcontroller devices. With their fully integrated A/D converter they are especially suitable for applications which interface to analog signals, such as those from sensors. The addition of an internal operational amplifier/comparator and PWM modulation functions further adds to the analog capability of these devices.

With the comprehensive features of low power consumption, I/O flexibility, programmable frequency divider, timer functions, oscillator options, multi-channel A/D Converter OP/Comparator, Pulse Width Modulation function, Power-down and wake-up functions etc, the application scope of these devices is broad and encompasses areas such as sensor signal processing, motor driving, industrial control, consumer products, subsystem controllers, etc.

The HT46R342 is under development and will be available soon.

找PDF 维库一下 pdf.dzsc.com

Block Diagram

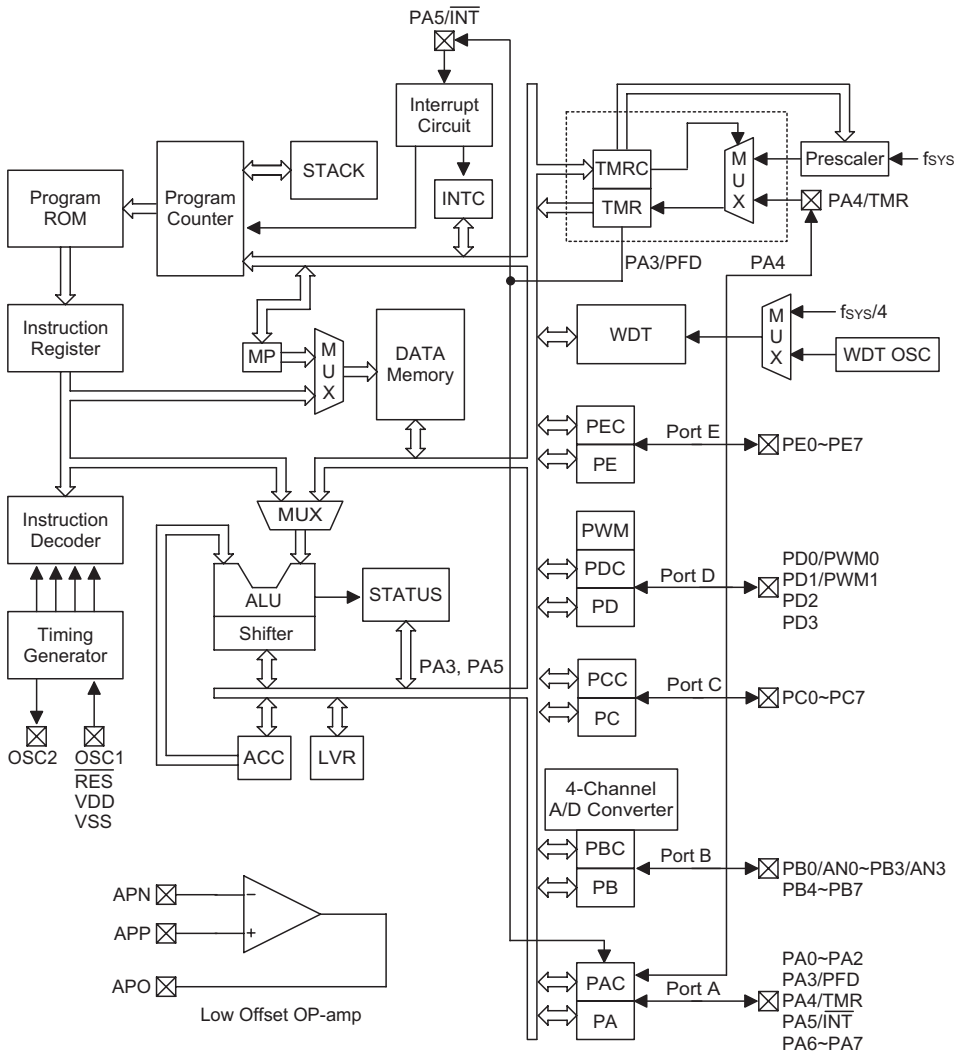

Pin Assignment

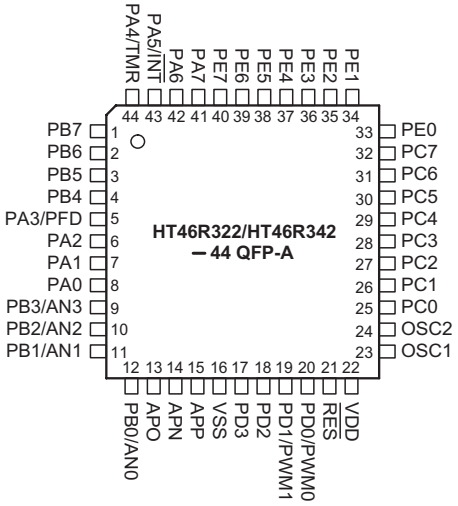

Pin Description

Pin Name	I/O	Options	Description
PA0~PA2 PA3/PFD PA4/TMR PA5/$\overline{\text{INT}}$ PA6, PA7	I/O	Pull-high Wake-up PA3 or PFD	Bidirectional 8-bit input/output port. Each pin can be configured as wake-up input by configuration options. Software instructions determine if the pin is a CMOS output or Schmitt trigger input. Configuration options determine which pins on the port have pull-high resistors. The PFD, TMR and $\overline{\text{INT}}$ pins are pin-shared with PA3, PA4 and PA5, respectively.
PB0/AN0 PB1/AN1 PB2/AN2 PB3/AN3 PB4~PB7	I/O	Pull-high	Bidirectional 8-bit input/output port. Software instructions determine if the pin is a CMOS output or Schmitt trigger input. Configuration options determine which pins on the port have pull-high resistors. Pins PB0~PB3 are pin-shared with the A/D input pins. The A/D inputs are selected via software instructions. Once selected as an A/D input, the I/O function and pull-high resistor are disabled automatically.
PC0~PC7	I/O	Pull-high	Bidirectional 8-bit input/output port. Software instructions determine if the pin is a CMOS output or Schmitt trigger input. A configuration option determines if all pins on the port have pull-high resistors.
PD0/PWM0 PD1/PWM1 PD2 PD3	I/O	Pull-high PD0 or PWM0 PD1 or PWM1	Bi-directional 4-bit input/output port. Software instructions determine if the pin is a CMOS output or Schmitt trigger input. Configuration options determine which pins on this port have pull-high resistors. PD0/PD1 are pin-shared with the PWM0/PWM1 outputs selected via configuration option.
PE0~PE7	I/O	Pull-high	Bidirectional 8-bit input/output port. Software instructions determine if the pin is a CMOS output or Schmitt trigger input. A configuration option determines if all pins on the port have pull-high resistors.
APO APN APP	O I I	—	APO, APN and APP are the internal operational amplifier, output pin, negative input pin and positive input pin respectively .
$\overline{\text{RES}}$	I	—	Schmitt trigger reset input. Active low.
VDD	—	—	Positive power supply
VSS	—	—	Negative power supply, ground.
OSC1 OSC2	I O	Crystal or RC	OSC1, OSC2 are connected to an external RC network or external crystal, determined by configuration option, for the internal system clock. If the RC system clock option is selected, pin OSC2 can be used to measure the system clock at 1/4 frequency.

Absolute Maximum Ratings

Supply Voltage .....V_{SS}–0.3V to V_{SS}+6.0V
Input Voltage.....V_{SS}–0.3V to V_{DD}+0.3V
I_{OL} Total 150mA
Total Power Dissipation 500mW

Storage Temperature .....–50°C to 125°C
Operating Temperature.....–40°C to 85°C
I_{OH} Total.....–100mA

Note: These are stress ratings only. Stresses exceeding the range specified under "Absolute Maximum Ratings" may cause substantial damage to the device. Functional operation of this device at other conditions beyond those listed in the specification is not implied and prolonged exposure to extreme conditions may affect device reliability.

D.C. Characteristics

Operating Temperature: 40°C~+85°C, Ta=25°C

Symbol	Parameter	Test Conditions		Min.	Typ.	Max.	Unit
		V_{DD}	Conditions				
V_{DD}	Operating Voltage	—	f_{SYS}=4MHz	2.2	—	5.5	V
		—	f_{SYS}=8MHz	3.3	—	5.5	V
I_{DD1}	Operating Current (Crystal OSC)	3V	No load, f_{SYS}=4MHz ADC disable	—	0.6	1.5	mA
		5V		—	2	4	mA
I_{DD2}	Operating Current (RC OSC)	3V	No load, f_{SYS}=4MHz ADC disable	—	0.8	1.5	mA
		5V		—	2.5	4	mA
I_{DD3}	Operating Current (Crystal OSC, RC OSC)	5V	No load, f_{SYS}=8MHz ADC disable	—	4	8	mA
I_{STB1}	Standby Current (WDT Enabled)	3V	No load, system HALT	—	—	5	μA
		5V		—	—	10	μA
I_{STB2}	Standby Current (WDT Disabled)	3V	No load, system HALT	—	—	1	μA
		5V		—	—	2	μA
V_{IL1}	Input Low Voltage for I/O Ports, TMR and $\overline{INT}$	—	—	0	—	$0.3V_{DD}$	V
V_{IH1}	Input High Voltage for I/O Ports, TMR and $\overline{INT}$	—	—	$0.7V_{DD}$	—	V_{DD}	V
V_{IL2}	Input Low Voltage ($\overline{RES}$)	—	—	0	—	$0.4V_{DD}$	V
V_{IH2}	Input High Voltage ($\overline{RES}$)	—	—	$0.9V_{DD}$	—	V_{DD}	V
V_{LVR}	Low Voltage Reset	—	—	2.7	3.0	3.3	V
I_{OL1}	I/O Port Sink Current (PA, PD, PE)	3V	V_{OL}=0.1V_{DD}	4	8	—	mA
		5V	V_{OL}=0.1V_{DD}	10	20	—	mA
I_{OH1}	I/O Port Source Current (PA, PC, PD)	3V	V_{OH}=0.9V_{DD}	–2	–4	—	mA
		5V	V_{OH}=0.9V_{DD}	–5	–10	—	mA
I_{OL2}	PC Ports Sink Current for LED Driver	3V	V_{OL}=0.1V_{DD}	8	16	—	mA
		5V	V_{OL}=0.1V_{DD}	20	40	—	mA
I_{OH2}	PE Ports Source Current for LED Driver	3V	V_{OH}=0.9V_{DD}	–4	–8	—	mA
		5V	V_{OH}=0.9V_{DD}	–10	–20	—	mA
R_{PH}	Pull-high Resistance	3V	—	20	60	100	kΩ
		5V	—	10	30	50	kΩ
V_{AD}	A/D Input Voltage	—	—	0	—	V_{DD}	V

Symbol	Parameter	Test Conditions		Min.	Typ.	Max.	Unit
		V_{DD}	Conditions				
I_{ADC}	Additional Power Consumption if A/D Converter is Used	3V	—	—	0.5	1	mA
		5V		—	1.5	3	mA
DNL	ADC Differential Non-Linearity	5V	t_{AD}=1μs	—	—	±2	mA
INL	ADC Integral Non-Linearity	5V	t_{AD}=1μs	—	±2.5	4	mA
RESOLU	Resolution	—	—	—	—	12	Bits

A.C. Characteristics

Ta=25°C

Symbol	Parameter	Test Conditions		Min.	Typ.	Max.	Unit
		V_{DD}	Conditions				
f_{SYS}	System Clock (Crystal OSC, RC OSC)	—	2.2V~5.5V	400	—	4000	kHz
		—	3.3V~5.5V	400	—	8000	kHz
f_{TIMER}	Timer I/P Frequency (TMR)	—	2.2V~5.5V	0	—	4000	kHz
		—	3.3V~5.5V	0	—	8000	kHz
t_{WDTOSC}	Watchdog Oscillator Period	3V	—	45	90	180	μs
		5V	—	32	65	130	μs
t_{WDT1}	Watchdog Time-out Period (WDT OSC)	—	—	2^{15}	—	2^{16}	t_{WDTOSC}
t_{WDT2}	Watchdog Time-out Period (System Clock)	—	—	2^{17}	—	2^{18}	t_{SYS}
t_{RES}	External Reset Low Pulse Width	—	—	1	—	—	μs
t_{SST}	System Start-up Timer Period	—	Wake-up from HALT	—	1024	—	$*t_{SYS}$
t_{LVR}	Low Voltage Width to Reset	—	—	0.25	1	2	ms
t_{INT}	Interrupt Pulse Width	—	—	1	—	—	μs
t_{AD}	A/D Clock Period	—	—	1	—	—	μs
t_{ADC}	A/D Conversion Time	—	—	—	80	—	t_{AD}
t_{ADCS}	A/D Sampling Time	—	—	—	32	—	t_{AD}

Note: $*t_{SYS}=1/f_{SYS}$

OP Amplifier Electrical Characteristics

Ta=25°C

Symbol	Parameter	Test Conditions		Min.	Typ.	Max.	Unit
		V_{DD}	Conditions				
D.C. Electrical Characteristic							
V_{DD}	Operating Voltage	—	—	3	—	5.5	V
V_{OPOS1}	Input Offset Voltage	5V	—	–10	—	10	mV
V_{OPOS2}	Input Offset Voltage	5V	By Calibration	–2	—	2	mV
V_{CM}	Common Mode Voltage Range	—	—	V_{SS}	—	V_{DD}-1.4V	V
PSRR	Power Supply Rejection Ratio	—	—	60	80	—	dB
CMRR	Common Mode Rejection Ratio	5V	V_{CM}=0~V_{DD}–1.4V	60	80	—	dB
t_{RES}	Response Time (Comparator)	—	Input overdrive=±10mV	—	—	2	μs
A.C. Electrical Characteristic							
V_{OPOS1}	Open Loop Gain	—	—	60	80	—	dB
SR	Slew Rate +, Slew Rate -	—	No load	—	0.1	—	V/μs
GBW	Gain Band Width	—	R_L=1M, C_L=100p	—	—	100	kHz

Functional Description

Execution Flow

The system clock for the microcontroller is derived from either a crystal or an RC oscillator. The system clock is internally divided into four non-overlapping clocks. One instruction cycle consists of four system clock cycles.

Instruction fetching and execution are pipelined in such a way that a fetch takes an instruction cycle while decoding and execution takes the next instruction cycle. However, the pipelining scheme causes each instruction to effectively execute in a cycle. If an instruction changes the program counter, two cycles are required to complete the instruction.

Program Counter – PC

The program counter controls the sequence in which the instructions stored in program memory are executed and whose contents specify full range of program memory.

After accessing a program memory word to fetch an instruction code, the contents of the program counter are incremented by one. The program counter then points to the memory word containing the next instruction code.

When executing a jump instruction, conditional skip execution, loading PCL register, subroutine call, initial reset, internal interrupt, external interrupt or return from subroutine, the PC manipulates the program transfer by loading the address corresponding to each instruction.

The conditional skip is activated by instructions. Once the condition is met, the next instruction, fetched during the current instruction execution, is discarded and a dummy cycle replaces it to get the proper instruction. Otherwise proceed with the next instruction.

The lower byte of the program counter, PCL, is a readable and writeable register. Moving data into the PCL performs a short jump. The destination will be within 256 locations.

When a control transfer takes place, an additional dummy cycle is required.

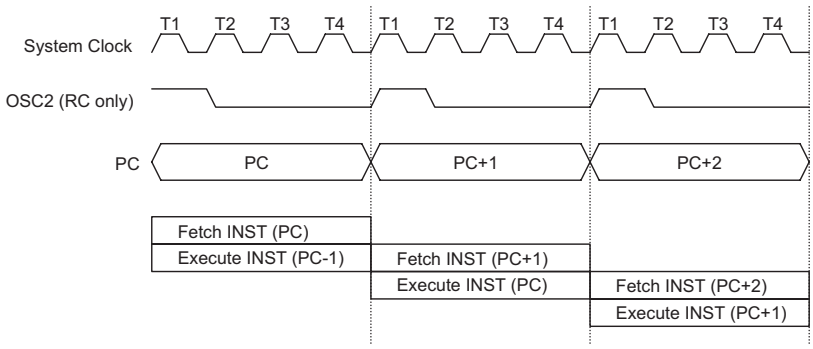

Execution Flow

Mode	Program Counter											
	*11	*10	*9	*8	*7	*6	*5	*4	*3	*2	*1	*0
Initial Reset	0	0	0	0	0	0	0	0	0	0	0	0
External Interrupt	0	0	0	0	0	0	0	0	0	1	0	0
Timer/Event Counter Overflow	0	0	0	0	0	0	0	0	1	0	0	0
A/D Converter Interrupt	0	0	0	0	0	0	0	0	1	1	0	0
Skip	Program Counter+2											
Loading PCL	*11	*10	*9	*8	@7	@6	@5	@4	@3	@2	@1	@0
Jump, Call Branch	#11	#10	#9	#8	#7	#6	#5	#4	#3	#2	#1	#0
Return from Subroutine	S11	S10	S9	S8	S7	S6	S5	S4	S3	S2	S1	S0

Program Counter

Note: PC11~PC8: Current Program Counter bits
S11~S0: Stack register bits
#11~#0: Instruction Code bits
@7~@0: PCL bits
For the HT46R322 device the Program Counter is 11 bits wide, i.e. from b10~b0, therefore the b11 column in the table is not applicable.

Program Memory – ROM

The program memory is used to store the program instructions which are to be executed as well as table data and interrupt entries. It is structured into 2K×14 bits for the HT46R322 device and 4K x 15 bits for the HT46R342 device, which can be addressed by both the program counter and table pointer.

Certain locations in the program memory are reserved for use by the reset and by the interrupt vectors.

- Location 000H
  This vector is reserved for program initialisation. After a device reset is initiated, the program will jump to this location and begin execution.
- Location 004H
  This vector is used by the external interrupt $\overline{\text{INT}}$. If the external interrupt pin on the device receives a low going edge, the program will jump to this location and begin execution if the external interrupt is enabled and the stack is not full.
- Location 008H
  This vector is used by the Timer/Event Counter. If a timer overflow occurs, the program will jump to this location and begin execution if the timer interrupt is enabled and the stack is not full.
- Location 00CH
  This vector is used by the A/D converter. When an A/D cycle conversion is complete, the program will jump to this location and begin execution if the A/D interrupt is enabled and the stack is not full.
- Table location
  Any location in the Program Memory space can be used as a look-up table. The instructions "TABRDC [m]" (the current page, 1 page=256 words) and "TABRDL [m]" (the last page) transfer the contents of the lower-order byte to the specified data memory, and the higher-order byte to TBLH. Only the destination of the lower-order byte in the table is well-defined, the other bits of the table word are transferred to the lower portion of TBLH, and the remaining bits are read as "0". The Table Higher-order byte register (TBLH) is read only. The table pointer (TBLP) is a read/write register, which indicates the table location. Before accessing the table, the location must be placed in TBLP. The TBLH register is read only and cannot be restored. If the main routine and the ISR, Interrupt Service Routine, both employ the table read instruction, the contents of the TBLH in the main routine are likely to be changed by the table read instruction used

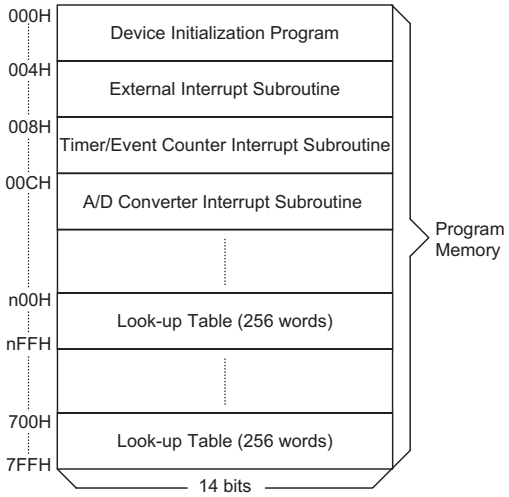

Note: n ranges from 0 to 7

Program Memory – HT46R322

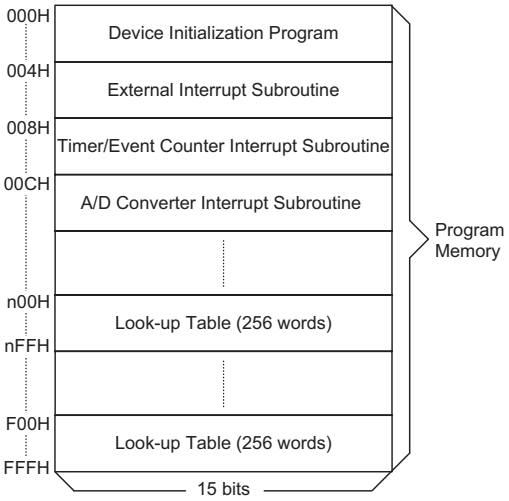

Note: n ranges from 0 to F

Program Memory – HT46R342

Instruction	Table Location											
	*11	*10	*9	*8	*7	*6	*5	*4	*3	*2	*1	*0
TABRDC [m]	P11	P10	P9	P8	@7	@6	@5	@4	@3	@2	@1	@0
TABRDL [m]	1	1	1	1	@7	@6	@5	@4	@3	@2	@1	@0

Table Location

Note: *11~*0: Table location bits P11~P8: Current program counter bits
@7~@0: Table pointer bits
For the HT46R322 device the Table address is 11 bits wide, i.e. from b10~b0, therefore the b11 column in the table is not applicable.

in the ISR. In such a case errors can occur. Therefore, using the table read instruction in the main routine and the ISR simultaneously should be avoided. However, if the table read instruction has to be used in both the main routine and the ISR, the interrupt is should be disabled prior to the table read instruction. It should not be re-enabled until the TBLH has been backed up. All table related instructions require two cycles to complete their operation. These areas may function as normal program memory depending upon requirements.

Stack Register – STACK

This is a special part of the memory which is used to save the contents of the program counter only. The stack is organized into 6 levels and is neither part of the data nor part of the program space, and is neither readable nor writeable. The activated level is indexed by the stack pointer, known as stack pointer, and is also neither readable nor writeable. At a subroutine call or interrupt acknowledgment, the contents of the program counter are pushed onto the stack. At the end of a subroutine or an interrupt routine, signaled by a return instruction, RET or RETI, the program counter is restored to its previous value from the stack. After a device reset, the stack pointer will point to the top of the stack.

If the stack is full and a non-masked interrupt takes place, the interrupt request flag will be recorded but the acknowledgment will be inhibited. When the stack pointer is decremented, using a RET or RETI instruction, the interrupt will be serviced. This feature prevents a stack overflow allowing the programmer to use the structure more easily. In a similar case, if the stack is full and a ″CALL″ is subsequently executed, stack overflow occurs and the first entry will be lost. Only the most recent 6 return addresses are stored.

Data Memory – RAM

The data memory has a structure of 115×8 bits for the HT46R322 device and 219×8 bits for the HT46R342 device. The data memory is divided into two functional groups: special function registers and general purpose data memory. The general purpose memory has a structure of 88×8 bits for the HT46R322 device and 192bits×8 bits for the HT46R342 device. Most locations are read/write, but some are read only.

The remaining space between the end of the Special Purpose Data Memory and the beginning of the General Purpose Data Memory is reserved for future expanded usage, reading these locations will obtain a result of ″00H″. The general purpose data memory, addressed from 28H to 7FH in the HT46R322, and from 40H to FFH in the HT46R342, is used for user data and control information under instruction commands. All of the data memory areas can handle arithmetic, logic, increment, decrement and rotate operations directly. Except for some dedicated bits, each bit in the data memory can be set and reset by the ″SET [m].i″ and ″CLR [m].i″ instructions. They are also indirectly accessible through memory pointer register, MP.

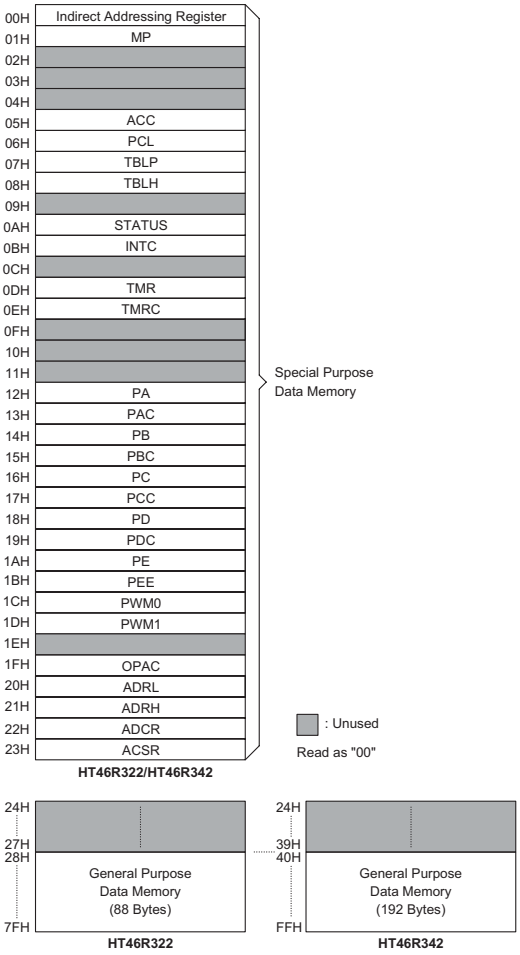

RAM Mapping

Indirect Addressing Register

Location 00H is an indirect addressing register that is not physically implemented. Any read/write operation on [00H] accesses data memory pointed to by the MP register. Reading location 00H itself indirectly will return the result 00H. Writing indirectly results in no operation.

For the HT46R322 device the memory pointer register, MP, is a 7-bit register, while for the HT46R342 device it is an 8-bit register. For the HT46R322 device, bit 7 of MP is undefined and if read will return the result ″1″, any write operation will only transfer the lower 7-bits of data to MP.

Accumulator

The accumulator is closely related to ALU operations and can carry out immediate data operations. Any data movement between two data memory locations must pass through the accumulator.

Arithmetic and Logic Unit – ALU

This circuit performs 8-bit arithmetic and logic operations. The ALU provides the following functions:

- Arithmetic operations - ADD, ADC, SUB, SBC, DAA
- Logic operations - AND, OR, XOR, CPL
- Rotation - RL, RR, RLC, RRC
- Increment and Decrement - INC, DEC
- Branch decision - SZ, SNZ, SIZ, SDZ ....

The ALU not only saves the results of a data operation but also changes the status register.

Status Register – STATUS

This 8-bit register contains the zero flag (Z), carry flag (C), auxiliary carry flag (AC), overflow flag (OV), power down flag (PDF), and watchdog time-out flag (TO). It also records the status information and controls the operation sequence.

With the exception of the TO and PDF flags, bits in the status register can be altered by instructions like most other registers. Any data written into the status register will not change the TO or PDF flag. In addition operations related to the status register may give different results from those intended. The TO flag can be affected only by system power-up, a WDT time-out or executing the ″CLR WDT″ or ″HALT″ instruction. The PDF flag can be affected only by executing the ″HALT″ or ″CLR WDT″ instruction or a system power-up.

The Z, OV, AC and C flags generally reflect the status of the latest operations.

In addition, on entering the interrupt sequence or executing the subroutine call, the status register will not be pushed onto the stack automatically. If the contents of the status are important and if the subroutine can corrupt the status register, precautions must be taken to save it properly.

Interrupt

The devices provide an external interrupt, an internal timer/event counter interrupt and an A/D converter interrupt. The Interrupt Control Register, INTC, contains the interrupt control bits to set the enable or disable and the interrupt request flags.

Bit No.	Label	Function
0	C	C is set if an operation results in a carry during an addition operation or if a borrow does not take place during a subtraction operation, otherwise C is cleared. C is also affected by a rotate through carry instruction.
1	AC	AC is set if an operation results in a carry out of the low nibbles in addition or no borrow from the high nibble into the low nibble in subtraction, otherwise AC is cleared.
2	Z	Z is set if the result of an arithmetic or logic operation is zero, otherwise Z is cleared.
3	OV	OV is set if an operation results in a carry into the highest-order bit but not a carry out of the highest-order bit, or vice versa, otherwise OV is cleared.
4	PDF	PDF is cleared by a system power-up or executing the ″CLR WDT″ instruction. PDF is set by executing the ″HALT″ instruction.
5	TO	TO is cleared by a system power-up or executing the ″CLR WDT″ or ″HALT″ instruction. TO is set by a WDT time-out.
6, 7	—	Unused bit, read as ″0″

Status (0AH) Register

Bit No.	Label	Function
0	EMI	Controls the master (global) interrupt (1=enabled; 0=disabled)
1	EEI	Controls the external interrupt (1=enabled; 0=disabled)
2	ETI	Controls the Timer/Event Counter interrupt (1=enabled; 0=disabled)
3	EADI	Controls the A/D converter interrupt (1=enabled; 0=disabled)
4	EIF	External interrupt request flag (1=active; 0=inactive)
5	TF	Internal Timer/Event Counter request flag (1=active; 0=inactive)
6	ADF	A/D converter request flag (1=active; 0=inactive)
7	—	Unused bit, read as ″0″

INTC (0BH) Register

Once an interrupt subroutine is serviced, all the other interrupts will be blocked by clearing the EMI bit. This scheme may prevent any further interrupt nesting. Other interrupt requests may happen during this interval but only the interrupt request flag is recorded. If a certain interrupt requires servicing within the service routine, the EMI bit and the corresponding bit in INTC may be set to allow interrupt nesting. If the stack is full, the interrupt request will not be acknowledged, even if the related interrupt is enabled, until the stack pointer is decremented. If immediate service is desired, the stack must be prevented from becoming full.

All interrupts have a wake-up capability. As an interrupt is serviced, a control transfer occurs by pushing the program counter onto the stack, followed by a branch to a subroutine at a specified location in the program memory. Only the program counter is pushed onto the stack. If the contents of the register or status register are altered by the interrupt service program which corrupts the desired control sequence, the contents should be saved in advance.

External interrupts are triggered by a high to low transition on the $\overline{\text{INT}}$ pin, which will set the related interrupt request flag, EIF, which is bit 4 of INTC. When the interrupt is enabled, the stack is not full and the external interrupt is active, a subroutine call to location 04H will occur. The interrupt request flag, EIF, and EMI bits will be cleared to disable other interrupts.

The internal timer/event counter interrupt is initialised by setting the timer/event counter interrupt request flag, TF, which is bit 5 of INTC, caused by a timer overflow. When the interrupt is enabled, the stack is not full and the TF bit is set, a subroutine call to location 08H will occur. The related interrupt request flag, TF, will be reset and the EMI bit cleared to disable further interrupts.

The A/D converter interrupt is initialised by setting the A/D converter request flag, ADF, which is bit 6 of INTC, caused by an end of A/D conversion. When the interrupt is enabled, the stack is not full and the ADF bit is set, a subroutine call to location 0CH will occur. The related interrupt request flag, ADF, will be reset and the EMI bit cleared to disable further interrupts.

During the execution of an interrupt subroutine, other interrupt acknowledgments are held until the RETI instruction is executed or the EMI bit and the related interrupt control bit are set to 1. Of course, the stack must not be full. To return from the interrupt subroutine, a RET or RETI instruction may be executed. A RETI instruction will set the EMI bit to enable an interrupt service, but a RET instruction will not.

Interrupts, occurring in the interval between the rising edges of two consecutive T2 pulses, will be serviced on the latter of the two T2 pulses, if the corresponding interrupts are enabled. In the case of simultaneous requests the following table shows the priority that is applied. These can be masked by resetting the EMI bit.

Interrupt Source	Priority	Vector
External Interrupt	1	004H
Timer/Event Counter Overflow	2	008H
A/D Converter Interrupt	3	00CH

Once the interrupt request flags, TF, EIF, ADF, are set, they will remain in the INTC register until the interrupts are serviced or cleared by a software instruction.

It is recommended that a program does not use the CALL subroutine within the interrupt subroutine. Interrupts often occur in an unpredictable manner or need to be serviced immediately in some applications. If only one stack is left and enabling the interrupt is not well controlled, the original control sequence will be damaged once the ″CALL″ operates in the interrupt subroutine.

Oscillator Configuration

There are two oscillator circuits in the microcontroller, namely an RC oscillator and a crystal oscillator, the choice of which is determined by a configuration option. When the system enters the Power-down mode the system oscillator stops and ignores external signals to conserve power.

If an RC oscillator is used, an external resistor between OSC1 and VSS is required whose resistance value must range from 24kΩ to 1MΩ. The system clock, divided by 4, can be monitored on pin OSC2 if a pull-high resistor is connected. This signal can be used to synchronise external logic. The RC oscillator provides the most cost effective solution, however the frequency of oscillation may vary with VDD, temperature and the process variations. It is, therefore, not suitable for timing sensitive operations where an accurate oscillator frequency is desired.

If the Crystal oscillator is used, a crystal across OSC1 and OSC2 is needed to provide the feedback and phase shift required for the oscillator; no other external components are required. Instead of a crystal, a resonator can also be connected between OSC1 and OSC2 to get a frequency reference, but two external capacitors in OSC1 and OSC2 are required, If the oscillating frequency is less than 1MHz.

The WDT oscillator is a free running on-chip RC oscillator, and requires no external components. Even if the system enters the power down mode, the system clock

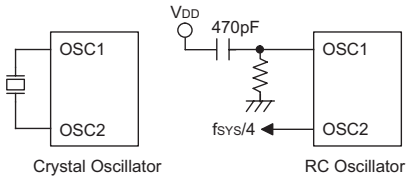

System Oscillator

is stopped, but the WDT oscillator keeps running with a period of approximately 65μs at 5V. The WDT oscillator can be disabled by a configuration option to conserve power.

Watchdog Timer – WDT

The WDT clock source comes from either its own integrated RC oscillator, known as the WDT oscillator, or the instruction clock, which is the system clock divided by 4. The choice of which one is used is decided by a configuration option. This timer is designed to prevent a software malfunction or sequence from jumping to an unknown location with unpredictable results. The Watchdog Timer can be disabled by a configuration option. If the Watchdog Timer is disabled, all the executions related to the WDT result in no operation.

Once the internal WDT oscillator (RC oscillator with a period of 65μs at 5V nominal) is selected, it is divided by 32768~65536 to get a time-out period of approximately 2.1s~4.3s. This time-out period may vary with temperatures, VDD and process variations. If the WDT oscillator is disabled, the WDT clock may still come from the instruction clock and operate in the same manner except that in the Power-down state the WDT may stop counting and lose its protecting purpose. In this situation the logic can only be restarted by external logic.

If the device operates in a noisy environment, using the on-chip RC oscillator (WDT OSC) is strongly recommended, since the HALT instruction will stop the system clock.

The WDT overflow under normal operation will initialise a ″chip reset″ and set the status bit ″TO″. But in the Power-down mode, the overflow will initialisze a ″warm reset″, and only the program counter and SP are reset to zero. To clear the contents of the WDT, three methods are adopted; external reset (a low level on the $\overline{\text{RES}}$ pin), a software instruction and a HALT instruction. The software instruction include ″CLR WDT″ and the other set – ″CLR WDT1″ and ″CLR WDT2″. Of these two types of instruction, only one can be active depending on the configuration option – ″CLR WDT times selection option″. If the ″CLR WDT″ is selected (i.e. CLR WDT times equal one), any execution of the ″CLR WDT″ instruction will clear the WDT. In the case that ″CLR WDT1″ and ″CLR WDT2″ are chosen (i.e. CLR WDT times equal two), these two instructions must be executed to clear the WDT; otherwise, the WDT may reset the chip as a result of time-out.

Power Down Operation – HALT

The HALT mode is initialised by the ″HALT″ instruction and results in the following...

- The system oscillator will be turned off but the WDT oscillator keeps running (if the WDT oscillator is selected).
- The contents of the on chip Data Memory and registers remain unchanged.
- WDT will be cleared and start counting again (if the WDT clock is from the WDT oscillator).
- All of the I/O ports maintain their original status.
- The PDF flag is set and the TO flag is cleared.

The system can leave the HALT mode by means of an external reset, an interrupt, an external falling edge signal on port A or a WDT overflow. An external reset causes a device initialisation and the WDT overflow performs a ″warm reset″. After the TO and PDF flags are examined, the reason for the chip reset can be determined. The PDF flag is cleared by a system power-up or executing the ″CLR WDT″ instruction and is set when executing the ″HALT″ instruction. The TO flag is set if the WDT time-out occurs, and causes a wake-up that only resets the program counter and Stack Pointer; the others keep their original status.

The port A wake-up and interrupt methods can be considered as a continuation of normal execution. Each bit in port A can be independently selected to wake up the device by the options. Awakening from an I/O port stimulus, the program will resume execution of the next instruction. If it is awakening from an interrupt, two sequences may happen. If the related interrupt is dis-

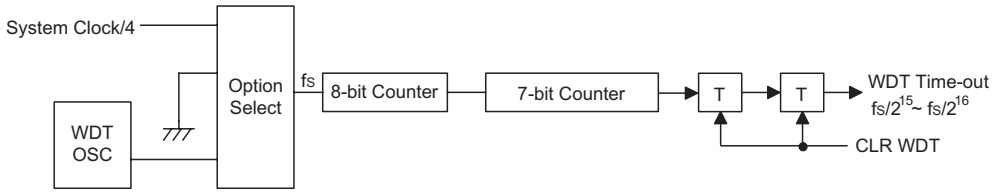

Watchdog Timer

abled or the interrupt is enabled but the stack is full, the program will resume execution at the next instruction. If the interrupt is enabled and the stack is not full, the regular interrupt response takes place. If an interrupt request flag is set to ″1″ before entering the HALT mode, the wake-up function of the related interrupt will be disabled. Once a wake-up event occurs, it takes 1024 t_{SYS} (system clock period) to resume normal operation. In other words, a dummy period will be inserted after wake-up. If the wake-up results from an interrupt acknowledgment, the actual interrupt subroutine execution will be delayed by one or more cycles. If the wake-up results in the next instruction execution, this will be executed immediately after the dummy period is finished.

To minimise power consumption, all the I/O pins should be carefully managed before entering the status.

Reset

There are three ways in which a reset can occur:

- $\overline{\text{RES}}$ reset during normal operation
- $\overline{\text{RES}}$ reset during HALT
- WDT time-out reset during normal operation

The WDT time-out during HALT is different from other chip reset conditions, since it can perform a ″warm reset″ that resets only the program counter and stack pointer, leaving the other circuits in their original state. Some registers remain unchanged during other reset conditions. Most registers are reset to the ″initial condition″ when the reset conditions are met. By examining the PDF and TO flags, the program can distinguish between different ″chip resets″.

TO	PDF	RESET Conditions
0	0	$\overline{\text{RES}}$ reset during power-up
u	u	$\overline{\text{RES}}$ reset during normal operation
0	1	$\overline{\text{RES}}$ wake-up HALT
1	u	WDT time-out during normal operation
1	1	WDT wake-up HALT

Note: ″u″ means ″unchanged″

To guarantee that the system oscillator is started and stabilized, the SST (System Start-up Timer) provides an extra-delay of 1024 system clock pulses when the system reset (power-up, WDT time-out or $\overline{\text{RES}}$ reset) or the system awakes from the HALT state.

When a system reset occurs, the SST delay is added during the reset period. Any wake-up from HALT will enable the SST delay.

An extra option load time delay is added during system reset (power-up, WDT time-out at normal mode or $\overline{\text{RES}}$ reset).

The functional unit chip reset status are shown below.

Program Counter	000H
Interrupt	Disable
WDT	Clear. After master reset, WDT begins counting
Timer/Event Counter	Off
Input/Output Ports	Input mode
Stack Pointer	Points to the top of the stack

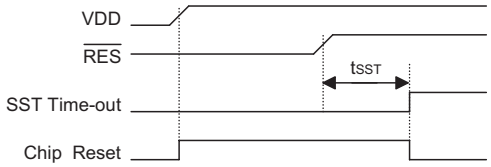

Reset Timing Chart

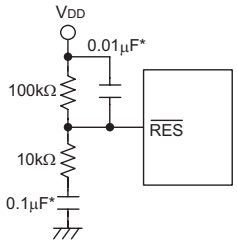

Reset Circuit

Note: ″*″ Ensure that the length of the wiring, which is connected to the $\overline{\text{RES}}$ pin is as short as possible, to avoid noise interference.

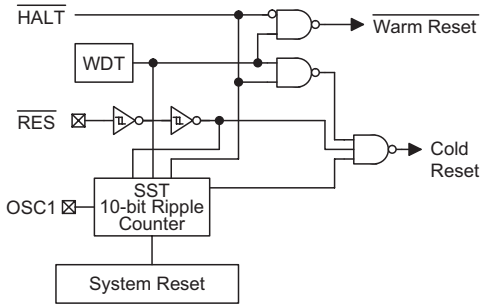

Reset Configuration

The registers′ states are summarised in the following table.

Register	Reset (Power On)	WDT Time-out (Normal Operation)	$\overline{RES}$ Reset (Normal Operation)	$\overline{RES}$ Reset (HALT)	WDT Times-out (HALT)*
MP - HT46R322	1xxx xxxx	1uuu uuuu	1uuu uuuu	1uuu uuuu	1uuu uuuu
MP - HT46R342	xxxx xxxx	uuuu uuuu	uuuu uuuu	uuuu uuuu	uuuu uuuu
ACC	xxxx xxxx	uuuu uuuu	uuuu uuuu	uuuu uuuu	uuuu uuuu
PCL	0000 0000	0000 0000	0000 0000	0000 0000	0000 0000
TBLP	xxxx xxxx	uuuu uuuu	uuuu uuuu	uuuu uuuu	uuuu uuuu
TBLH - HT46R322	--xx xxxx	--uu uuuu	--uu uuuu	--uu uuuu	--uu uuuu
TBLH - HT46R342	-xxx xxxx	-uuu uuuu	-uuu uuuu	-uuu uuuu	-uuu uuuu
STATUS	--00 xxxx	--1u uuuu	--uu uuuu	--01 uuuu	--11 uuuu
INTC	-000 0000	-000 0000	-000 0000	-000 0000	-uuu uuuu
TMR	xxxx xxxx	xxxx xxxx	xxxx xxxx	xxxx xxxx	uuuu uuuu
TMRC	00-0 1000	00-0 1000	00-0 1000	00-0 1000	uu-u uuuu
PA	1111 1111	1111 1111	1111 1111	1111 1111	uuuu uuuu
PAC	1111 1111	1111 1111	1111 1111	1111 1111	uuuu uuuu
PB	1111 1111	1111 1111	1111 1111	1111 1111	uuuu uuuu
PBC	1111 1111	1111 1111	1111 1111	1111 1111	uuuu uuuu
PC	1111 1111	1111 1111	1111 1111	1111 1111	uuuu uuuu
PCC	1111 1111	1111 1111	1111 1111	1111 1111	uuuu uuuu
PD	---- 1111	---- 1111	---- 1111	---- 1111	---- uuuu
PDC	---- 1111	---- 1111	---- 1111	---- 1111	---- uuuu
PE	1111 1111	1111 1111	1111 1111	1111 1111	uuuu uuuu
PEC	1111 1111	1111 1111	1111 1111	1111 1111	uuuu uuuu
PWM0	xxxx xxxx	xxxx xxxx	xxxx xxxx	xxxx xxxx	uuuu uuuu
PWM1	xxxx xxxx	xxxx xxxx	xxxx xxxx	xxxx xxxx	uuuu uuuu
OPAC	0000 1000	0000 1000	0000 1000	0000 1000	uuuu uuuu
ADRL	xxxx ----	xxxx ----	xxxx ----	xxxx ----	uuuu ----
ADRH	xxxx xxxx	xxxx xxxx	xxxx xxxx	xxxx xxxx	uuuu uuuu
ADCR	0100 0000	0100 0000	0100 0000	0100 0000	uuuu uuuu
ACSR	1--- --00	1--- --00	1--- --00	1--- --00	u--- --uu

Note: ″*″ stands for warm reset
″u″ stands for unchanged
″x″ stands for unknown

Timer/Event Counter

A timer/event counter is implemented in the microcontroller. The timer/event counter contains an 8-bit programmable count-up counter whose clock source may come from an external source or from the system clock.

Using an external clock input allows the user to count external events, measure time internals or pulse widths, or generate an accurate time base. While using the internal clock allows the user to generate an accurate time base.

The timer/event counter can generate a PFD signal by using the external or internal clock. The PFD frequency is determined by the equation $f_{INT}/[2\times(256\text{-}N)]$.

There are 2 registers related to the timer/event counter; TMR and TMRC. Two physical registers are mapped to the TMR location. Writing to TMR places the start value in the timer/event counter preload register, while reading TMR retrieves the contents of the timer/event counter. The TMRC register is a timer/event counter control register, which defines some options.

The TM0 and TM1 bits define the operating mode. The event count mode is used to count external events, which means the clock source emanates from the external TMR pin. The timer mode functions as a normal timer with the clock source coming from the f_{INT} clock. The pulse width measurement mode can be used to count the high or low level duration of the external signal on TMR. The counting is based on f_{INT}.

In the event count or timer mode, once the timer/event counter starts counting, it will count from the current contents in the timer/event counter to FFH. Once an overflow occurs, the counter is reloaded from the timer/event counter preload register and generates an interrupt request flag, TF, which is bit 5 of INTC, at the same time.

In the pulse width measurement mode with the TON and TE bits equal to one, once TMR has received a transient from low to high (or high to low if the TE bits is ″0″) it will start counting until TMR returns to the original level and resets the TON bit. The measured result will remain in the timer/event counter even if the activated transient occurs again. Therefore only a one cycle measurement is made. Not until the TON bit is once again set, will the cycle measurement function again if further transient pulses are received. Note that, in this operating mode, the timer/event counter starts counting not according to the logic level but according to the transient edges. In the case of counter overflows, the counter is reloaded from the timer/event counter preload register and issues the interrupt request just like the other two modes. To enable the counting operation, the timer ON bit,TON, which is bit 4 of TMRC, should be set to 1. In the pulse width measurement mode, the TON bit will be cleared automatically after the measurement cycle is completed. But in the other two modes the TON bit can only be reset by instructions. The overflow of the timer/event counter is one of the wake-up sources. No matter what the operation mode is, writing a 0 to ETI can disable the interrupt service.

Bit No.	Label	Function
0 1 2	PSC0 PSC1 PSC2	Defines the prescaler stages, PSC2, PSC1, PSC0= 000: $f_{INT}=f_{SYS}$ 001: $f_{INT}=f_{SYS}/2$ 010: $f_{INT}=f_{SYS}/4$ 011: $f_{INT}=f_{SYS}/8$ 100: $f_{INT}=f_{SYS}/16$ 101: $f_{INT}=f_{SYS}/32$ 110: $f_{INT}=f_{SYS}/64$ 111: $f_{INT}=f_{SYS}/128$
3	TE	Defines the TMR active edge of the timer/event counter: In Event Counter Mode (TM1,TM0)=(0,1): 1:count on falling edge; 0:count on rising edge In Pulse Width measurement mode (TM1,TM0)=(1,1): 1: start counting on the rising edge, stop on the falling edge; 0: start counting on the falling edge, stop on the rising edge
4	TON	Enable or disable the timer counting (0=disable; 1=enable)
5	—	Unused bits, read as ″0″
6 7	TM0 TM1	Defines the operating mode (TM1, TM0)= 01=Event count mode (external clock) 10=Timer mode (internal clock) 11=Pulse width measurement mode 00=Unused

TMRC (0EH) Register

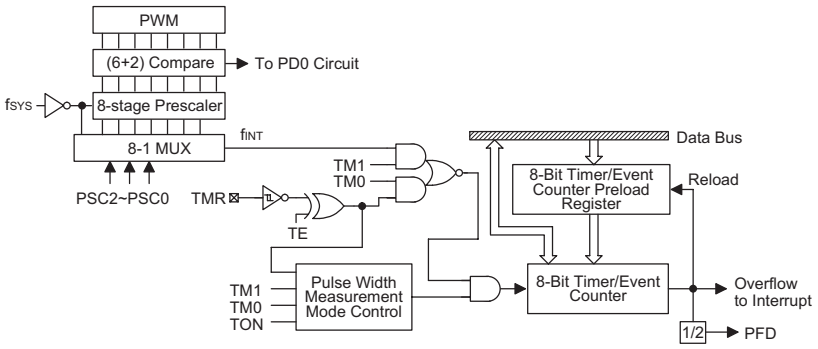

Timer/Event Counter

In the case of a timer/event counter OFF condition, writing data to the timer/event counter preload register will also reload that data to the timer/event counter. But if the timer/event counter is turned on, data written to it will only be kept in the timer/event counter preload register. The timer/event counter will still operate until an overflow occurs. When the timer/event counter is read, the clock will be blocked to avoid errors. As clock blocking may results in a counting error, this must be taken into consideration by the programmer.

Bit0~bit2 of the TMRC register can be used to define the pre-scaling stages of the internal clock sources of the timer/event counter. The definitions are as shown. The overflow signal of timer/event counter can be used to generate the PFD signal.

Input/Output Ports

There are 19 bidirectional input/output lines in the microcontroller, labeled as PA, PB, PC, PD and PE, which are mapped to the data memory of [12H], [14H], [16H], [18H] and [1AH] respectively. All of these I/O ports can be used for input and output operations. For input operation, these ports are non-latching, that is, the inputs must be ready at the T2 rising edge of instruction ″MOV A,[m]″ (m=12H, 14H, 16H, 18H or 1AH). For output operation, all the data is latched and remains unchanged until the output latch is rewritten.

Each I/O line has its own control register (PAC, PBC, PCC, PDC, PEC) to control the input/output configuration. With this control register, CMOS output or Schmitt trigger input with or without pull-high resistor structures can be reconfigured dynamically (i.e. on-the-fly) under software control. To function as an input, the corresponding latch of the control register must write ″1″. The input source also depends on the control register. If the control register bit is ″1″, the input will read the pad state. If the control register bit is ″0″, the contents of the latches will move to the internal bus. The latter is possible in the ″read-modify-write″ instruction.

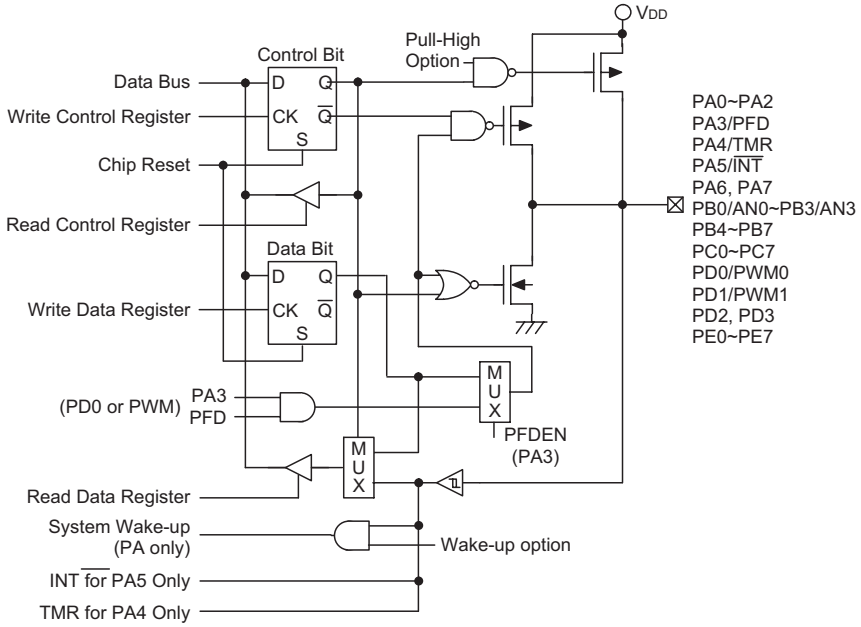

Input/Output Ports

After a device reset, the input/output lines will default to inputs and remain at a high level or floating state, dependent upon the pull-high configuration options. Each bit of these input/output latches can be set or cleared by the ″SET [m].i″ and ″CLR [m].i″ (m=12H, 14H, 16H, 18H or 1AH) instructions.

Some instructions first input data and then follow the output operations. For example, ″SET [m].i″, ″CLR [m].i″, ″CPL [m]″, ″CPLA [m]″ read the entire port states into the CPU, execute the defined operations (bit-operation), and then write the results back to the latches or the accumulator.

Each line of port A has the capability of waking-up the device.

Each I/O line has a pull-high option. Once the pull-high configuration option is selected, the I/O line has a pull-high resistor, otherwise, there′s none. Take note that a non-pull-high I/O line operating in input mode will cause a floating state.

Pin PA3 is pin-shared with the PFD signal. If the PFD configuration option is selected, the output signal in the output mode for PA3 will be the PFD signal generated by the timer/event counter overflow signal. The input mode always retains its original functions. Once the PFD option is selected, the PFD output signal is controlled by the PA3 data register only. Writing a ″1″ to the PA3 data register will enable the PFD output function and writing ″0″ will force the PA3 to remain at ″0″. The I/O functions for PA3 are shown below.

I/O Mode	I/P (Normal)	O/P (Normal)	I/P (PFD)	O/P (PFD)
PA3	Logical Input	Logical Output	Logical Input	PFD (Timer on)

Note: The PFD frequency is the timer/event counter overflow frequency divided by 2.

Pins PA5 and PA4 are pin-shared with $\overline{INT}$ and TMR pins respectively.

The PB can also be used as A/D converter inputs. The A/D function will be described later. There are two PWM functions shared with pins PD0 and PD1. If the PWM functions are enabled, the PWM signals will appear on PD0 and PD1, the pins are setup as outputs. Writing a ″1″ to the PD0 or PD1 data register will enable the PWM outputs to function while writing a ″0″ will force the PD0 and PD1 outputs to remain at ″0″. The I/O functions of PD0 and PD1 are as shown.

I/O Mode	I/P (Normal)	O/P (Normal)	I/P (PWM)	O/P (PWM)
PD0 PD1	Logical Input	Logical Output	Logical Input	PWM0 PWM1

It is recommended that unused I/O lines should be setup as output pins by software instructions to avoid consuming power under input floating states.

PWM

The microcontroller provides a 2 channel (6+2) bits PWM0/PWM1 output shared with PD0/PD1. The PWM channel has its data register denoted as PWM0 and PWM1. The frequency source of the PWM counter comes from f_{SYS}. The PWM register is an eight bit register. Once PD0/PD1 are selected as PWM outputs and the output function of PD0/PD1 is enabled (PDC.0=″0″ or PDC.1=″0″), writing a 1 to the PD0/PD1 data register will enable the PWM output function while writing a ″0″ will force the PD0/PD1 outputs to stay at ″0″.

A PWM cycle is divided into four modulation cycles (modulation cycle 0~modulation cycle 3). Each modulation cycle has 64 PWM input clock period. In a (6+2) bit PWM function, the contents of the PWM register is divided into two groups. Group 1 of the PWM register is denoted by DC which is the value of PWM.7~PWM.2.

Group 2 is denoted by AC which is the value of PWM.1~PWM.0.

In a PWM cycle, the duty cycle of each modulation cycle is shown in the table.

Parameter	AC (0~3)	Duty Cycle
Modulation cycle i (i=0~3)	i<AC	$\frac{DC+1}{64}$
	i≥AC	$\frac{DC}{64}$

The modulation frequency, cycle frequency and cycle duty of the PWM output signal are summarized in the following table.

PWM Modulation Frequency	PWM Cycle Frequency	PWM Cycle Duty
$f_{SYS}/64$	$f_{SYS}/256$	[PWM]/256

LED Driver

The device provides a maximum of 8×8 LED drivers which uses I/O Ports PC and PE with double the usual sink/source current drive capabilities. To use the LED driver function, PC and PE must be setup as outputs.

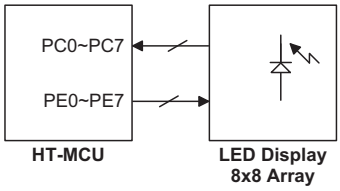

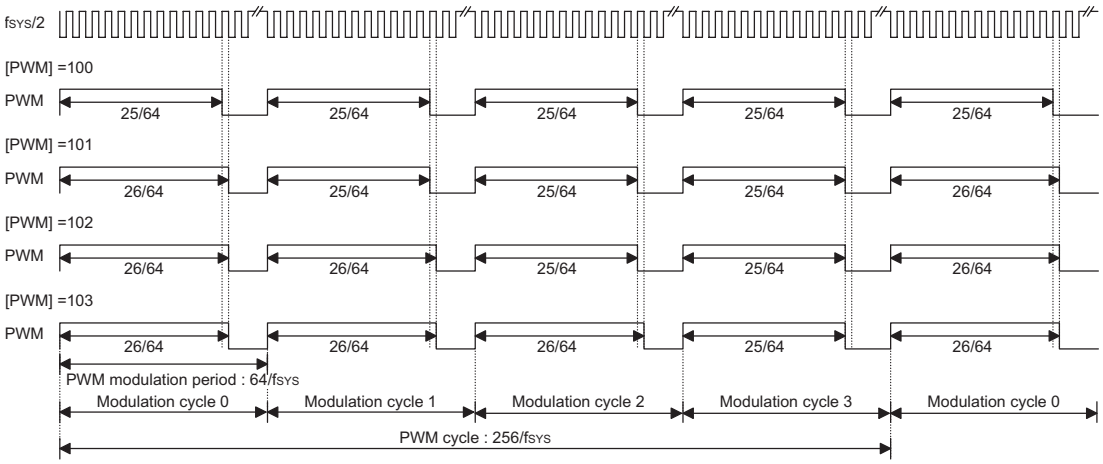

PWM

A/D Converter

A 4 channel 12-bit resolution A/D converter is implemented in the microcontrollers. The reference voltage for the A/D is VDD. The A/D converter contains 4 special registers, which are; ADRL, ADRH, ADCR and ACSR. The ADRH and ADRL registers are the A/D conversion result register higher-order byte and lower-order byte and are read-only. After the A/D conversion has completed, the ADRL and ADRH registers should be read to get the conversion result data. The ADCR register is an A/D converter control register, which defines the A/D channel number, analog channel select, start A/D conversion control bit and the end of A/D conversion flag. It is used to start an A/D conversion, define the PB configuration, select the converted analog channel, and give the START bit a raising edge and a falling edge (0→1→0). At the end of an A/D conversion, the EOCB bit is cleared and an A/D converter interrupt occurs, if the A/D converter interrupt is enabled. The ACSR register is an A/D clock setting register, which is used to select the A/D clock source.

The A/D converter control register is used to control the A/D converter. Bit2~bit0 of the ADCR regsiter are used to select an analog input channel. There are a total of four channels to select. Bit5~bit3 of the ADCR register are used to set the PB configurations. PB can be configured as an analog input or as a digital I/O line decided by these 3 bits. Once a PB line is selected as an analog input, the I/O functions and pull-high resistor of this I/O line are disabled, and the A/D converter circuit is powered on. The EOCB bit, bit6 of ADCR, is the end of A/D conversion flag. This bit is monitored to check when the A/D conversion has completed. The START bit of the ADCR register is used to initiate the A/D conversion process. When the START bit is provided with a raising edge and then a falling edge, the A/D conversion process will begin. In order to ensure that the A/D conversion is completed, the START should remain at ″0″ until the EOCB flag is cleared to ″0″ which indicates the end of the A/D conversion.

Bit 7 of the ACSR register is used for test purposes only and must not be used for other purposes by the application program. Bit1 and bit0 of the ACSR register are used to select the A/D clock source.

When the A/D conversion has completed, the A/D interrupt request flag will be set. The EOCB bit is set to ″1″ when the START bit is set from ″0″ to ″1″.

Important Note for A/D initialisation:
Special care must be taken to initialise the A/D converter each time the Port B A/D channel selection bits are modified, otherwise the EOCB flag may be in an undefined condition. An A/D initialisation is implemented by setting the START bit high and then clearing it to zero within 10 instruction cycles of the Port B channel selection bits being modified. Note that if the Port B channel selection bits are all cleared to zero then an A/D initialisation is not required.

Register	Bit7	Bit6	Bit5	Bit4	Bit3	Bit2	Bit1	Bit0
ADRL	D3	D2	D1	D0	—	—	—	—
ADRH	D11	D10	D9	D8	D7	D6	D5	D4

Note: D0~D11 is A/D conversion result data bit LSB~MSB.

ADRL (20H), ADRH (21H) Register

Bit No.	Label	Function
0 1 2	ACS0 ACS1 ACS2	ACS2, ACS1, ACS0: Select A/D channel 0, 0, 0: AN0 0, 0, 1: AN1 0, 1, 0: AN2 0, 1, 1: AN3 1, X, X: undefined, cannot be used
2	—	Unused bit, read as ″0″.
3 4 5	PCR0 PCR1 PCR2	PCR2, PCR1, PCR0: PB3~PB0 configurations 0, 0, 0: PB3 PB2 PB1 PB0 (The ADC circuit is power off to reduce power consumption.) 0, 0, 1: PB3 PB2 PB1 AN0 0, 1, 0: PB3 PB2 AN1 AN0 0, 1, 1: PB3 AN2 AN1 AN0 1, x, x: AN3 AN2 AN1 AN0
6	EOCB	Indicates end of A/D conversion. (0 = end of A/D conversion) Each time bits 3~5 change state the A/D should be initialised by issuing a START signal, otherwise the EOCB flag may have an undefined condition. See ″Important note for A/D initialisation″.
7	START	Starts the A/D conversion. (0→1→0= start; 0→1= Reset A/D converter and set EOCB to ″1″)

ADCR (22H) Register

Bit No.	Label	Function
0 1	ADCS0 ADCS1	Select the A/D converter clock source. 0, 0: $f_{SYS}/2$ 0, 1: $f_{SYS}/8$ 1, 0: $f_{SYS}/32$ 1, 1: Undefined
2~6	—	Unused bit, read as ″0″.
7	TEST	For internal test only.

ACSR (23H) Register

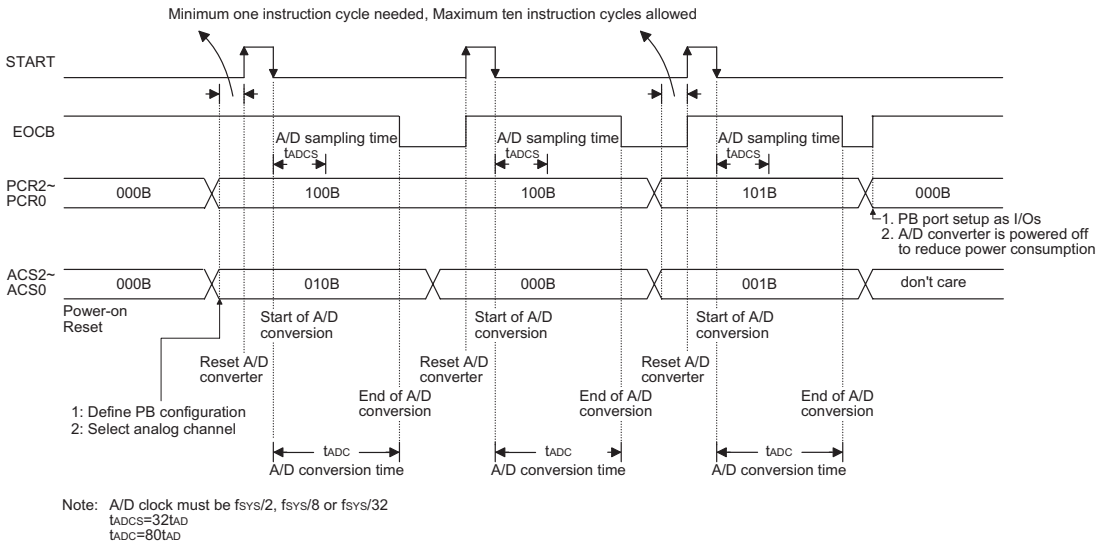

A/D Conversion Timing

The following two programming examples illustrate how to setup and implement an A/D conversion. In the first example, the method of polling the EOCB bit in the ADCR register is used to detect when the conversion cycle is complete, whereas in the second example, the A/D interrupt is used to determine when the conversion is complete.

Example: using EOCB Polling Method to detect end of conversion

```
    clr     EADI                ; disable ADC interrupt
    mov     a,00000001B
    mov     ACSR,a              ; setup the ACSR register to select fSYS/8 as the A/D clock
    mov     a,00100000B         ; setup ADCR register to configure Port PB0~PB3 as A/D inputs
    mov     ADCR,a              ; and select AN0 to be connected to the A/D converter
            :
            :                   ; As the Port B channel bits have changed the following START
                                ; signal (0-1-0) must be issued within 10 instruction cycles
            :
Start_conversion:
    clr     START
    set     START               ; reset A/D
    clr     START               ; start A/D
Polling_EOC:
    sz      EOCB                ; poll the ADCR register EOCB bit to detect end of A/D conversion
    jmp     polling_EOC         ; continue polling
    mov     a,ADRH              ; read conversion result high byte value from the ADRH register
    mov     adrh_buffer,a       ; save result to user defined memory
    mov     a,ADRL              ; read conversion result low byte value from the ADRL register
    mov     adrl_buffer,a       ; save result to user defined memory
            :
            :
    jmp     start_conversion    ; start next A/D conversion
```

Example: using interrupt method to detect end of conversion

```
    clr     EADI                ; disable ADC interrupt
    mov     a,00000001B
    mov     ACSR,a              ; setup the ACSR register to select fSYS/8 as the A/D clock

    mov     a,00100000B         ; setup ADCR register to configure Port PB0~PB3 as A/D inputs
    mov     ADCR,a              ; and select AN0 to be connected to the A/D converter
            :
                                ; As the Port B channel bits have changed the following START
                                ; signal (0-1-0) must be issued within 10 instruction cycles
            :
Start_conversion:
    clr     START
    set     START               ; reset A/D
    clr     START               ; start A/D
    clr     ADF                 ; clear ADC interrupt request flag
    set     EADI                ; enable ADC interrupt
    set     EMI                 ; enable global interrupt
            :
            :
            :
; ADC interrupt service routine
ADC_ISR:
    mov     acc_stack,a         ; save ACC to user defined memory
    mov     a,STATUS
    mov     status_stack,a      ; save STATUS to user defined memory
            :
            :
    mov     a,ADRH              ; read conversion result high byte value from the ADRH register
    mov     adrh_buffer,a       ; save result to user defined register
    mov     a,ADRL              ; read conversion result low byte value from the ADRL register
    mov     adrl_buffer,a       ; save result to user defined register
    clr     START
    set     START               ; reset A/D
    clr     START               ; start A/D
            :
            :
EXIT_INT_ISR:
    mov     a,status_stack
    mov     STATUS,a            ; restore STATUS from user defined memory
    mov     a,acc_stack         ; restore ACC from user defined memory
    reti
```

Low Voltage Reset – LVR

The microcontroller provides a low voltage reset circuit in order to monitor the supply voltage of the device. If the supply voltage of the device is within the range 0.9V~V_{LVR}, such as what happens when changing a battery, the LVR will automatically reset the device internally.

The LVR includes the following specifications:

- The low voltage (0.9V~V_{LVR}) has to remain in its original state to exceed t_{LVR}. If the low voltage state does not exceed t_{LVR}, the LVR will ignore it and will not perform a reset function.
- The LVR uses the "OR" function with the external $\overline{RES}$ signal to perform a chip reset.

The relationship between V_{DD} and V_{LVR} is shown below.

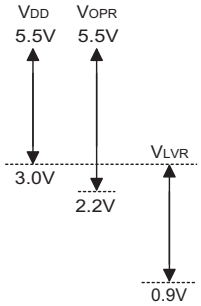

Note: V_{OPR} is the voltage range for proper chip operation at 4MHz system clock.

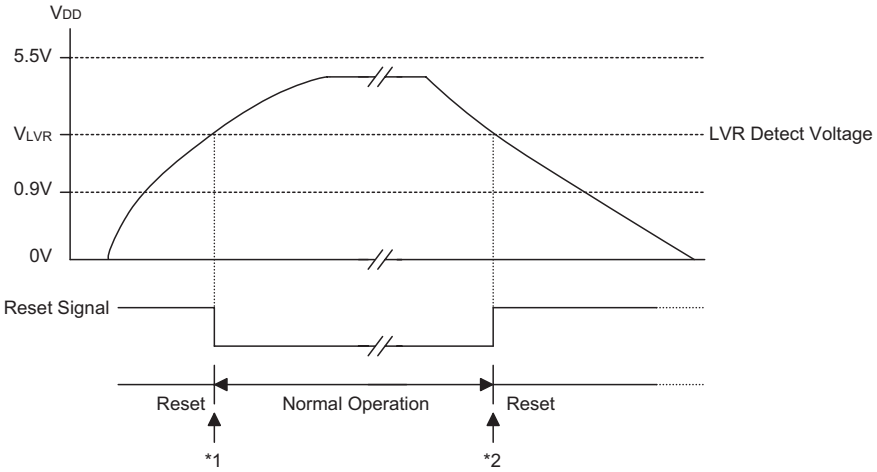

Low Voltage Reset

Note: *1: To make sure that the system oscillator has stabilised, the SST provides an extra delay of 1024 system clock pulses before beginning normal operation.

*2: Since the low voltage has to maintain in its original state and exceed t_{LVR}, therefore t_{LVR} delay enter the reset mode.

OP Amplifier/Comparator

The devices include an integrated operational amplifier or comparator, selectable via configuration option. The default is function is comparator. The input voltage offset is adjustable by using a common mode input to calibrate the offset value.

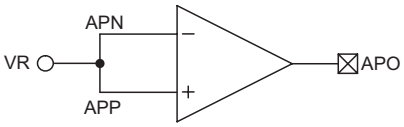

The calibration process is as follows:

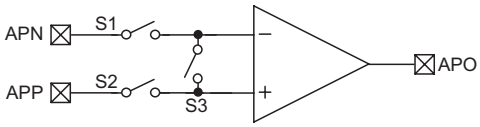

- Set bit AOFM=1 to select the offset cancellation mode - this closes switch S3
- Set the ARS bit to select which input pin is the reference voltage - closes either switch S1 or S2
- Adjust bits AOF0~AOF3 until the output status OPAOP has changed.
- Set AOFM=0 to select the normal operating mode

Bit No.	Label	Function
0 1 2 3	AOF0 AOF1 AOF2 AOF3	OP amp/comparator input offset voltage cancellation control bits
4	ARS	OP amp/comparator input offset voltage cancellation reference selection bit 1/0 : select OPP/OPN (CP/CN) as the reference input
5	AOFM	Input offset voltage cancellation mode and OP amp/comparator mode selection 1: input offset voltage cancellation mode 0: OP amp/comparator
6	OPAOP	OP amp/comparator output; positive logic
7	OPAEN	OP amp/comparator enable/disable (1/0) If OP/comparator is disabled, output is floating.

OPAC (1FH) Register

If the OP amp/comparator is disabled, the power consumption will be very small. To ensure that power consumption is minimised when the device is in the Power-down mode, the OP amp/comparator should be switched off by clearing bit OPAEN to 0 before entering the Power-down mode.

Configuration Options

The following table shows the various microcontroller configuration options. All of the configuration options must be properly defined to ensure correct system functioning.

No.	Options
1	WDT clock source: WDTOSC or T1 ($f_{SYS}/4$)
2	WDT function: enable or disable
3	CLRWDT instruction(s): one or two clear WDT instruction(s)
4	System oscillator: RC or crystal
5	Pull-high resistors (PA, PB, PD): none or pull-high
6	PWM enable or disable
7	PA0~PA7 wake-up: enable or disable
8	PFD enable or disable
9	Low voltage reset selection: enable or disable LVR function.
10	Comparator or OP selection

Application Circuits

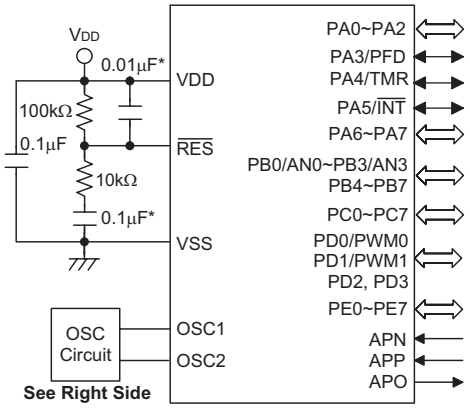

HT46R322/HT46R342

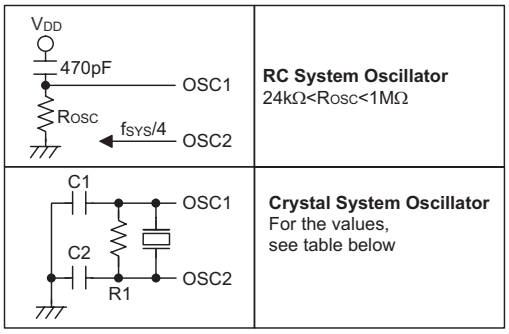

OSC Circuit

The following table shows the C1, C2 and R1 values corresponding to the different crystal values. (For reference only)

Crystal or Resonator	HT46R322		HT46R342	
	C1, C2	R1	C1, C2	R1
8MHz Crystal	10pF	4.3kΩ	TBD	TBD
8MHz Resonator	10pF	4.7kΩ	TBD	TBD
4MHz Crystal	25pF	12kΩ	TBD	TBD
4MHz Resonator	10pF	12kΩ	TBD	TBD
3.58MHz Crystal	25pF	12kΩ	TBD	TBD
3.58MHz Resonator	10pF	12kΩ	TBD	TBD
2MHz Crystal & Resonator	30pF	12kΩ	TBD	TBD
1MHz Crystal	68pF	18kΩ	TBD	TBD
480kHz Resonator	300pF	10kΩ	TBD	TBD
455kHz Resonator	300pF	10kΩ	TBD	TBD
429kHz Resonator	300pF	10kΩ	TBD	TBD
400kHz Resonator	300pF	10kΩ	TBD	TBD
The function of the resistor R1 is to ensure that the oscillator will switch off should low voltage conditions occur. Such a low voltage, as mentioned here, is one which is less than the lowest value of the MCU operating voltage. Note however that if the LVR is enabled then R1 can be removed.				

Note: The resistance and capacitance for the reset circuit should be designed in such a way as to ensure that the VDD is stable and remains within a valid operating voltage range before bringing $\overline{RES}$ to high.
"*" Make the length of the wiring, which is connected to the $\overline{RES}$ pin as short as possible, to avoid noise interference.

Instruction Set Summary

Mnemonic	Description	Instruction Cycle	Flag Affected
Arithmetic			
ADD A,[m]	Add data memory to ACC	1	Z,C,AC,OV
ADDM A,[m]	Add ACC to data memory	1(1)	Z,C,AC,OV
ADD A,x	Add immediate data to ACC	1	Z,C,AC,OV
ADC A,[m]	Add data memory to ACC with carry	1	Z,C,AC,OV
ADCM A,[m]	Add ACC to data memory with carry	1(1)	Z,C,AC,OV
SUB A,x	Subtract immediate data from ACC	1	Z,C,AC,OV
SUB A,[m]	Subtract data memory from ACC	1	Z,C,AC,OV
SUBM A,[m]	Subtract data memory from ACC with result in data memory	1(1)	Z,C,AC,OV
SBC A,[m]	Subtract data memory from ACC with carry	1	Z,C,AC,OV
SBCM A,[m]	Subtract data memory from ACC with carry and result in data memory	1(1)	Z,C,AC,OV
DAA [m]	Decimal adjust ACC for addition with result in data memory	1(1)	C
Logic Operation			
AND A,[m]	AND data memory to ACC	1	Z
OR A,[m]	OR data memory to ACC	1	Z
XOR A,[m]	Exclusive-OR data memory to ACC	1	Z
ANDM A,[m]	AND ACC to data memory	1(1)	Z
ORM A,[m]	OR ACC to data memory	1(1)	Z
XORM A,[m]	Exclusive-OR ACC to data memory	1(1)	Z
AND A,x	AND immediate data to ACC	1	Z
OR A,x	OR immediate data to ACC	1	Z
XOR A,x	Exclusive-OR immediate data to ACC	1	Z
CPL [m]	Complement data memory	1(1)	Z
CPLA [m]	Complement data memory with result in ACC	1	Z
Increment & Decrement			
INCA [m]	Increment data memory with result in ACC	1	Z
INC [m]	Increment data memory	1(1)	Z
DECA [m]	Decrement data memory with result in ACC	1	Z
DEC [m]	Decrement data memory	1(1)	Z
Rotate			
RRA [m]	Rotate data memory right with result in ACC	1	None
RR [m]	Rotate data memory right	1(1)	None
RRCA [m]	Rotate data memory right through carry with result in ACC	1	C
RRC [m]	Rotate data memory right through carry	1(1)	C
RLA [m]	Rotate data memory left with result in ACC	1	None
RL [m]	Rotate data memory left	1(1)	None
RLCA [m]	Rotate data memory left through carry with result in ACC	1	C
RLC [m]	Rotate data memory left through carry	1(1)	C
Data Move			
MOV A,[m]	Move data memory to ACC	1	None
MOV [m],A	Move ACC to data memory	1(1)	None
MOV A,x	Move immediate data to ACC	1	None
Bit Operation			
CLR [m].i	Clear bit of data memory	1(1)	None
SET [m].i	Set bit of data memory	1(1)	None

Mnemonic	Description	Instruction Cycle	Flag Affected
Branch			
JMP addr	Jump unconditionally	2	None
SZ [m]	Skip if data memory is zero	1(2)	None
SZA [m]	Skip if data memory is zero with data movement to ACC	1(2)	None
SZ [m].i	Skip if bit i of data memory is zero	1(2)	None
SNZ [m].i	Skip if bit i of data memory is not zero	1(2)	None
SIZ [m]	Skip if increment data memory is zero	1(3)	None
SDZ [m]	Skip if decrement data memory is zero	1(3)	None
SIZA [m]	Skip if increment data memory is zero with result in ACC	1(2)	None
SDZA [m]	Skip if decrement data memory is zero with result in ACC	1(2)	None
CALL addr	Subroutine call	2	None
RET	Return from subroutine	2	None
RET A,x	Return from subroutine and load immediate data to ACC	2	None
RETI	Return from interrupt	2	None
Table Read			
TABRDC [m]	Read ROM code (current page) to data memory and TBLH	2(1)	None
TABRDL [m]	Read ROM code (last page) to data memory and TBLH	2(1)	None
Miscellaneous			
NOP	No operation	1	None
CLR [m]	Clear data memory	1(1)	None
SET [m]	Set data memory	1(1)	None
CLR WDT	Clear Watchdog Timer	1	TO,PDF
CLR WDT1	Pre-clear Watchdog Timer	1	TO(4),PDF(4)
CLR WDT2	Pre-clear Watchdog Timer	1	TO(4),PDF(4)
SWAP [m]	Swap nibbles of data memory	1(1)	None
SWAPA [m]	Swap nibbles of data memory with result in ACC	1	None
HALT	Enter power down mode	1	TO,PDF

Note: x: Immediate data

m: Data memory address

A: Accumulator

i: 0~7 number of bits

addr: Program memory address

√: Flag is affected

–: Flag is not affected

(1): If a loading to the PCL register occurs, the execution cycle of instructions will be delayed for one more cycle (four system clocks).

(2): If a skipping to the next instruction occurs, the execution cycle of instructions will be delayed for one more cycle (four system clocks). Otherwise the original instruction cycle is unchanged.

(3): (1) and (2)

(4): The flags may be affected by the execution status. If the Watchdog Timer is cleared by executing the CLR WDT1 or CLR WDT2 instruction, the TO and PDF are cleared.
Otherwise the TO and PDF flags remain unchanged.

Instruction Definition

ADC A,[m] Add data memory and carry to the accumulator

Description The contents of the specified data memory, accumulator and the carry flag are added simultaneously, leaving the result in the accumulator.

Operation ACC ← ACC+[m]+C

Affected flag(s)

TO	PDF	OV	Z	AC	C
—	—	√	√	√	√

ADCM A,[m] Add the accumulator and carry to data memory

Description The contents of the specified data memory, accumulator and the carry flag are added simultaneously, leaving the result in the specified data memory.

Operation [m] ← ACC+[m]+C

Affected flag(s)

TO	PDF	OV	Z	AC	C
—	—	√	√	√	√

ADD A,[m] Add data memory to the accumulator

Description The contents of the specified data memory and the accumulator are added. The result is stored in the accumulator.

Operation ACC ← ACC+[m]

Affected flag(s)

TO	PDF	OV	Z	AC	C
—	—	√	√	√	√

ADD A,x Add immediate data to the accumulator

Description The contents of the accumulator and the specified data are added, leaving the result in the accumulator.

Operation ACC ← ACC+x

Affected flag(s)

TO	PDF	OV	Z	AC	C
—	—	√	√	√	√

ADDM A,[m] Add the accumulator to the data memory

Description The contents of the specified data memory and the accumulator are added. The result is stored in the data memory.

Operation [m] ← ACC+[m]

Affected flag(s)

TO	PDF	OV	Z	AC	C
—	—	√	√	√	√

AND A,[m] Logical AND accumulator with data memory

Description Data in the accumulator and the specified data memory perform a bitwise logical_AND operation. The result is stored in the accumulator.

Operation ACC ← ACC ″AND″ [m]

Affected flag(s)

TO	PDF	OV	Z	AC	C
—	—	—	√	—	—

AND A,x Logical AND immediate data to the accumulator

Description Data in the accumulator and the specified data perform a bitwise logical_AND operation. The result is stored in the accumulator.

Operation ACC ← ACC ″AND″ x

Affected flag(s)

TO	PDF	OV	Z	AC	C
—	—	—	√	—	—

ANDM A,[m] Logical AND data memory with the accumulator

Description Data in the specified data memory and the accumulator perform a bitwise logical_AND operation. The result is stored in the data memory.

Operation [m] ← ACC ″AND″ [m]

Affected flag(s)

TO	PDF	OV	Z	AC	C
—	—	—	√	—	—

CALL addr Subroutine call

Description The instruction unconditionally calls a subroutine located at the indicated address. The program counter increments once to obtain the address of the next instruction, and pushes this onto the stack. The indicated address is then loaded. Program execution continues with the instruction at this address.

Operation Stack ← Program Counter+1
Program Counter ← addr

Affected flag(s)

TO	PDF	OV	Z	AC	C
—	—	—	—	—	—

CLR [m] Clear data memory

Description The contents of the specified data memory are cleared to 0.

Operation [m] ← 00H

Affected flag(s)

TO	PDF	OV	Z	AC	C
—	—	—	—	—	—

CLR [m].i Clear bit of data memory

Description The bit i of the specified data memory is cleared to 0.

Operation [m].i ← 0

Affected flag(s)

TO	PDF	OV	Z	AC	C
—	—	—	—	—	—

CLR WDT Clear Watchdog Timer

Description The WDT is cleared (clears the WDT). The power down bit (PDF) and time-out bit (TO) are cleared.

Operation WDT ← 00H
PDF and TO ← 0

Affected flag(s)

TO	PDF	OV	Z	AC	C
0	0	—	—	—	—

CLR WDT1 Preclear Watchdog Timer

Description Together with CLR WDT2, clears the WDT. PDF and TO are also cleared. Only execution of this instruction without the other preclear instruction just sets the indicated flag which implies this instruction has been executed and the TO and PDF flags remain unchanged.

Operation WDT ← 00H*
PDF and TO ← 0*

Affected flag(s)

TO	PDF	OV	Z	AC	C
0*	0*	—	—	—	—

CLR WDT2 Preclear Watchdog Timer

Description Together with CLR WDT1, clears the WDT. PDF and TO are also cleared. Only execution of this instruction without the other preclear instruction, sets the indicated flag which implies this instruction has been executed and the TO and PDF flags remain unchanged.

Operation WDT ← 00H*
PDF and TO ← 0*

Affected flag(s)

TO	PDF	OV	Z	AC	C
0*	0*	—	—	—	—

CPL [m] Complement data memory

Description Each bit of the specified data memory is logically complemented (1′s complement). Bits which previously contained a 1 are changed to 0 and vice-versa.

Operation [m] ← $[\overline{m}]$

Affected flag(s)

TO	PDF	OV	Z	AC	C
—	—	—	√	—	—

CPLA [m] Complement data memory and place result in the accumulator

Description Each bit of the specified data memory is logically complemented (1′s complement). Bits which previously contained a 1 are changed to 0 and vice-versa. The complemented result is stored in the accumulator and the contents of the data memory remain unchanged.

Operation ACC ← [$\overline{m}$]

Affected flag(s)

TO	PDF	OV	Z	AC	C
—	—	—	√	—	—

DAA [m] Decimal-Adjust accumulator for addition

Description The accumulator value is adjusted to the BCD (Binary Coded Decimal) code. The accumulator is divided into two nibbles. Each nibble is adjusted to the BCD code and an internal carry (AC1) will be done if the low nibble of the accumulator is greater than 9. The BCD adjustment is done by adding 6 to the original value if the original value is greater than 9 or a carry (AC or C) is set; otherwise the original value remains unchanged. The result is stored in the data memory and only the carry flag (C) may be affected.

Operation
If ACC.3~ACC.0 >9 or AC=1
then [m].3~[m].0 ← (ACC.3~ACC.0)+6, AC1=$\overline{AC}$
else [m].3~[m].0 ← (ACC.3~ACC.0), AC1=0
and
If ACC.7~ACC.4+AC1 >9 or C=1
then [m].7~[m].4 ← ACC.7~ACC.4+6+AC1,C=1
else [m].7~[m].4 ← ACC.7~ACC.4+AC1,C=C

Affected flag(s)

TO	PDF	OV	Z	AC	C
—	—	—	—	—	√

DEC [m] Decrement data memory

Description Data in the specified data memory is decremented by 1.

Operation [m] ← [m]–1

Affected flag(s)

TO	PDF	OV	Z	AC	C
—	—	—	√	—	—

DECA [m] Decrement data memory and place result in the accumulator

Description Data in the specified data memory is decremented by 1, leaving the result in the accumulator. The contents of the data memory remain unchanged.

Operation ACC ← [m]–1

Affected flag(s)

TO	PDF	OV	Z	AC	C
—	—	—	√	—	—

HALT Enter power down mode

Description This instruction stops program execution and turns off the system clock. The contents of the RAM and registers are retained. The WDT and prescaler are cleared. The power down bit (PDF) is set and the WDT time-out bit (TO) is cleared.

Operation Program Counter ← Program Counter+1
PDF ← 1
TO ← 0

Affected flag(s)

TO	PDF	OV	Z	AC	C
0	1	—	—	—	—

INC [m] Increment data memory

Description Data in the specified data memory is incremented by 1

Operation [m] ← [m]+1

Affected flag(s)

TO	PDF	OV	Z	AC	C
—	—	—	√	—	—

INCA [m] Increment data memory and place result in the accumulator

Description Data in the specified data memory is incremented by 1, leaving the result in the accumulator. The contents of the data memory remain unchanged.

Operation ACC ← [m]+1

Affected flag(s)

TO	PDF	OV	Z	AC	C
—	—	—	√	—	—

JMP addr Directly jump

Description The program counter are replaced with the directly-specified address unconditionally, and control is passed to this destination.

Operation Program Counter ←addr

Affected flag(s)

TO	PDF	OV	Z	AC	C
—	—	—	—	—	—

MOV A,[m] Move data memory to the accumulator

Description The contents of the specified data memory are copied to the accumulator.

Operation ACC ← [m]

Affected flag(s)

TO	PDF	OV	Z	AC	C
—	—	—	—	—	—

MOV A,x Move immediate data to the accumulator

Description The 8-bit data specified by the code is loaded into the accumulator.

Operation ACC ← x

Affected flag(s)

TO	PDF	OV	Z	AC	C
—	—	—	—	—	—

MOV [m],A Move the accumulator to data memory

Description The contents of the accumulator are copied to the specified data memory (one of the data memories).

Operation [m] ←ACC

Affected flag(s)

TO	PDF	OV	Z	AC	C
—	—	—	—	—	—

NOP No operation

Description No operation is performed. Execution continues with the next instruction.

Operation Program Counter ← Program Counter+1

Affected flag(s)

TO	PDF	OV	Z	AC	C
—	—	—	—	—	—

OR A,[m] Logical OR accumulator with data memory

Description Data in the accumulator and the specified data memory (one of the data memories) perform a bitwise logical_OR operation. The result is stored in the accumulator.

Operation ACC ← ACC ″OR″ [m]

Affected flag(s)

TO	PDF	OV	Z	AC	C
—	—	—	√	—	—

OR A,x Logical OR immediate data to the accumulator

Description Data in the accumulator and the specified data perform a bitwise logical_OR operation. The result is stored in the accumulator.

Operation ACC ← ACC ″OR″ x

Affected flag(s)

TO	PDF	OV	Z	AC	C
—	—	—	√	—	—

ORM A,[m] Logical OR data memory with the accumulator

Description Data in the data memory (one of the data memories) and the accumulator perform a bitwise logical_OR operation. The result is stored in the data memory.

Operation [m] ←ACC ″OR″ [m]

Affected flag(s)

TO	PDF	OV	Z	AC	C
—	—	—	√	—	—

RET Return from subroutine

Description The program counter is restored from the stack. This is a 2-cycle instruction.

Operation Program Counter ← Stack

Affected flag(s)

TO	PDF	OV	Z	AC	C
—	—	—	—	—	—

RET A,x Return and place immediate data in the accumulator

Description The program counter is restored from the stack and the accumulator loaded with the specified 8-bit immediate data.

Operation Program Counter ← Stack
ACC ← x

Affected flag(s)

TO	PDF	OV	Z	AC	C
—	—	—	—	—	—

RETI Return from interrupt

Description The program counter is restored from the stack, and interrupts are enabled by setting the EMI bit. EMI is the enable master (global) interrupt bit.

Operation Program Counter ← Stack
EMI ← 1

Affected flag(s)

TO	PDF	OV	Z	AC	C
—	—	—	—	—	—

RL [m] Rotate data memory left

Description The contents of the specified data memory are rotated 1 bit left with bit 7 rotated into bit 0.

Operation [m].(i+1) ← [m].i; [m].i:bit i of the data memory (i=0~6)
[m].0 ← [m].7

Affected flag(s)

TO	PDF	OV	Z	AC	C
—	—	—	—	—	—

RLA [m] Rotate data memory left and place result in the accumulator

Description Data in the specified data memory is rotated 1 bit left with bit 7 rotated into bit 0, leaving the rotated result in the accumulator. The contents of the data memory remain unchanged.

Operation ACC.(i+1) ← [m].i; [m].i:bit i of the data memory (i=0~6)
ACC.0 ← [m].7

Affected flag(s)

TO	PDF	OV	Z	AC	C
—	—	—	—	—	—

RLC [m] Rotate data memory left through carry

Description The contents of the specified data memory and the carry flag are rotated 1 bit left. Bit 7 replaces the carry bit; the original carry flag is rotated into the bit 0 position.

Operation [m].(i+1) ← [m].i; [m].i:bit i of the data memory (i=0~6)
[m].0 ← C
C ← [m].7

Affected flag(s)

TO	PDF	OV	Z	AC	C
—	—	—	—	—	√

RLCA [m] Rotate left through carry and place result in the accumulator

Description Data in the specified data memory and the carry flag are rotated 1 bit left. Bit 7 replaces the carry bit and the original carry flag is rotated into bit 0 position. The rotated result is stored in the accumulator but the contents of the data memory remain unchanged.

Operation ACC.(i+1) ← [m].i; [m].i:bit i of the data memory (i=0~6)
ACC.0 ← C
C ← [m].7

Affected flag(s)

TO	PDF	OV	Z	AC	C
—	—	—	—	—	√

RR [m] Rotate data memory right

Description The contents of the specified data memory are rotated 1 bit right with bit 0 rotated to bit 7.

Operation [m].i ← [m].(i+1); [m].i:bit i of the data memory (i=0~6)
[m].7 ← [m].0

Affected flag(s)

TO	PDF	OV	Z	AC	C
—	—	—	—	—	—

RRA [m] Rotate right and place result in the accumulator

Description Data in the specified data memory is rotated 1 bit right with bit 0 rotated into bit 7, leaving the rotated result in the accumulator. The contents of the data memory remain unchanged.

Operation ACC.(i) ← [m].(i+1); [m].i:bit i of the data memory (i=0~6)
ACC.7 ← [m].0

Affected flag(s)

TO	PDF	OV	Z	AC	C
—	—	—	—	—	—

RRC [m] Rotate data memory right through carry

Description The contents of the specified data memory and the carry flag are together rotated 1 bit right. Bit 0 replaces the carry bit; the original carry flag is rotated into the bit 7 position.

Operation [m].i ← [m].(i+1); [m].i:bit i of the data memory (i=0~6)
[m].7 ← C
C ← [m].0

Affected flag(s)

TO	PDF	OV	Z	AC	C
—	—	—	—	—	√

RRCA [m] Rotate right through carry and place result in the accumulator

Description Data of the specified data memory and the carry flag are rotated 1 bit right. Bit 0 replaces the carry bit and the original carry flag is rotated into the bit 7 position. The rotated result is stored in the accumulator. The contents of the data memory remain unchanged.

Operation ACC.i ← [m].(i+1); [m].i:bit i of the data memory (i=0~6)
ACC.7 ← C
C ← [m].0

Affected flag(s)

TO	PDF	OV	Z	AC	C
—	—	—	—	—	√

SBC A,[m] Subtract data memory and carry from the accumulator

Description The contents of the specified data memory and the complement of the carry flag are subtracted from the accumulator, leaving the result in the accumulator.

Operation ACC ← ACC+$[\overline{m}]$+C

Affected flag(s)

TO	PDF	OV	Z	AC	C
—	—	√	√	√	√

SBCM A,[m] Subtract data memory and carry from the accumulator

Description The contents of the specified data memory and the complement of the carry flag are subtracted from the accumulator, leaving the result in the data memory.

Operation [m] ← ACC+$[\overline{m}]$+C

Affected flag(s)

TO	PDF	OV	Z	AC	C
—	—	√	√	√	√

SDZ [m] Skip if decrement data memory is 0

Description The contents of the specified data memory are decremented by 1. If the result is 0, the next instruction is skipped. If the result is 0, the following instruction, fetched during the current instruction execution, is discarded and a dummy cycle is replaced to get the proper instruction (2 cycles). Otherwise proceed with the next instruction (1 cycle).

Operation Skip if ([m]–1)=0, [m] ← ([m]–1)

Affected flag(s)

TO	PDF	OV	Z	AC	C
—	—	—	—	—	—

SDZA [m] Decrement data memory and place result in ACC, skip if 0

Description The contents of the specified data memory are decremented by 1. If the result is 0, the next instruction is skipped. The result is stored in the accumulator but the data memory remains unchanged. If the result is 0, the following instruction, fetched during the current instruction execution, is discarded and a dummy cycle is replaced to get the proper instruction (2 cycles). Otherwise proceed with the next instruction (1 cycle).

Operation Skip if ([m]–1)=0, ACC ← ([m]–1)

Affected flag(s)

TO	PDF	OV	Z	AC	C
—	—	—	—	—	—

SET [m] Set data memory

Description Each bit of the specified data memory is set to 1.

Operation [m] ← FFH

Affected flag(s)

TO	PDF	OV	Z	AC	C
—	—	—	—	—	—

SET [m]. i Set bit of data memory

Description Bit i of the specified data memory is set to 1.

Operation [m].i ← 1

Affected flag(s)

TO	PDF	OV	Z	AC	C
—	—	—	—	—	—

SIZ [m] Skip if increment data memory is 0

Description The contents of the specified data memory are incremented by 1. If the result is 0, the following instruction, fetched during the current instruction execution, is discarded and a dummy cycle is replaced to get the proper instruction (2 cycles). Otherwise proceed with the next instruction (1 cycle).

Operation Skip if ([m]+1)=0, [m] ← ([m]+1)

Affected flag(s)

TO	PDF	OV	Z	AC	C
—	—	—	—	—	—

SIZA [m] Increment data memory and place result in ACC, skip if 0

Description The contents of the specified data memory are incremented by 1. If the result is 0, the next instruction is skipped and the result is stored in the accumulator. The data memory remains unchanged. If the result is 0, the following instruction, fetched during the current instruction execution, is discarded and a dummy cycle is replaced to get the proper instruction (2 cycles). Otherwise proceed with the next instruction (1 cycle).

Operation Skip if ([m]+1)=0, ACC ← ([m]+1)

Affected flag(s)

TO	PDF	OV	Z	AC	C
—	—	—	—	—	—

SNZ [m].i Skip if bit i of the data memory is not 0

Description If bit i of the specified data memory is not 0, the next instruction is skipped. If bit i of the data memory is not 0, the following instruction, fetched during the current instruction execution, is discarded and a dummy cycle is replaced to get the proper instruction (2 cycles). Otherwise proceed with the next instruction (1 cycle).

Operation Skip if [m].i≠0

Affected flag(s)

TO	PDF	OV	Z	AC	C
—	—	—	—	—	—

SUB A,[m] Subtract data memory from the accumulator

Description The specified data memory is subtracted from the contents of the accumulator, leaving the result in the accumulator.

Operation ACC ← ACC+$[\overline{m}]$+1

Affected flag(s)

TO	PDF	OV	Z	AC	C
—	—	√	√	√	√

SUBM A,[m] Subtract data memory from the accumulator

Description The specified data memory is subtracted from the contents of the accumulator, leaving the result in the data memory.

Operation [m] ← ACC+$[\overline{m}]$+1

Affected flag(s)

TO	PDF	OV	Z	AC	C
—	—	√	√	√	√

SUB A,x Subtract immediate data from the accumulator

Description The immediate data specified by the code is subtracted from the contents of the accumulator, leaving the result in the accumulator.

Operation ACC ← ACC+$\overline{x}$+1

Affected flag(s)

TO	PDF	OV	Z	AC	C
—	—	√	√	√	√

SWAP [m] Swap nibbles within the data memory

Description The low-order and high-order nibbles of the specified data memory (1 of the data memories) are interchanged.

Operation [m].3~[m].0 ↔ [m].7~[m].4

Affected flag(s)

TO	PDF	OV	Z	AC	C
—	—	—	—	—	—

SWAPA [m] Swap data memory and place result in the accumulator

Description The low-order and high-order nibbles of the specified data memory are interchanged, writing the result to the accumulator. The contents of the data memory remain unchanged.

Operation ACC.3~ACC.0 ← [m].7~[m].4
ACC.7~ACC.4 ← [m].3~[m].0

Affected flag(s)

TO	PDF	OV	Z	AC	C
—	—	—	—	—	—

SZ [m] Skip if data memory is 0

Description If the contents of the specified data memory are 0, the following instruction, fetched during the current instruction execution, is discarded and a dummy cycle is replaced to get the proper instruction (2 cycles). Otherwise proceed with the next instruction (1 cycle).

Operation Skip if [m]=0

Affected flag(s)

TO	PDF	OV	Z	AC	C
—	—	—	—	—	—

SZA [m] Move data memory to ACC, skip if 0

Description The contents of the specified data memory are copied to the accumulator. If the contents is 0, the following instruction, fetched during the current instruction execution, is discarded and a dummy cycle is replaced to get the proper instruction (2 cycles). Otherwise proceed with the next instruction (1 cycle).

Operation Skip if [m]=0

Affected flag(s)

TO	PDF	OV	Z	AC	C
—	—	—	—	—	—

SZ [m].i Skip if bit i of the data memory is 0

Description If bit i of the specified data memory is 0, the following instruction, fetched during the current instruction execution, is discarded and a dummy cycle is replaced to get the proper instruction (2 cycles). Otherwise proceed with the next instruction (1 cycle).

Operation Skip if [m].i=0

Affected flag(s)

TO	PDF	OV	Z	AC	C
—	—	—	—	—	—

TABRDC [m] Move the ROM code (current page) to TBLH and data memory

Description The low byte of ROM code (current page) addressed by the table pointer (TBLP) is moved to the specified data memory and the high byte transferred to TBLH directly.

Operation [m] ← ROM code (low byte)
TBLH ← ROM code (high byte)

Affected flag(s)

TO	PDF	OV	Z	AC	C
—	—	—	—	—	—

TABRDL [m] Move the ROM code (last page) to TBLH and data memory

Description The low byte of ROM code (last page) addressed by the table pointer (TBLP) is moved to the data memory and the high byte transferred to TBLH directly.

Operation [m] ← ROM code (low byte)
TBLH ← ROM code (high byte)

Affected flag(s)

TO	PDF	OV	Z	AC	C
—	—	—	—	—	—

XOR A,[m] Logical XOR accumulator with data memory

Description Data in the accumulator and the indicated data memory perform a bitwise logical Exclusive_OR operation and the result is stored in the accumulator.

Operation ACC ← ACC ″XOR″ [m]

Affected flag(s)

TO	PDF	OV	Z	AC	C
—	—	—	√	—	—

XORM A,[m] Logical XOR data memory with the accumulator

Description Data in the indicated data memory and the accumulator perform a bitwise logical Exclusive_OR operation. The result is stored in the data memory. The 0 flag is affected.

Operation [m] ← ACC ″XOR″ [m]

Affected flag(s)

TO	PDF	OV	Z	AC	C
—	—	—	√	—	—

XOR A,x Logical XOR immediate data to the accumulator

Description Data in the accumulator and the specified data perform a bitwise logical Exclusive_OR operation. The result is stored in the accumulator. The 0 flag is affected.

Operation ACC ← ACC ″XOR″ x

Affected flag(s)

TO	PDF	OV	Z	AC	C
—	—	—	√	—	—

Package Information

44-pin QFP (10×10) Outline Dimensions

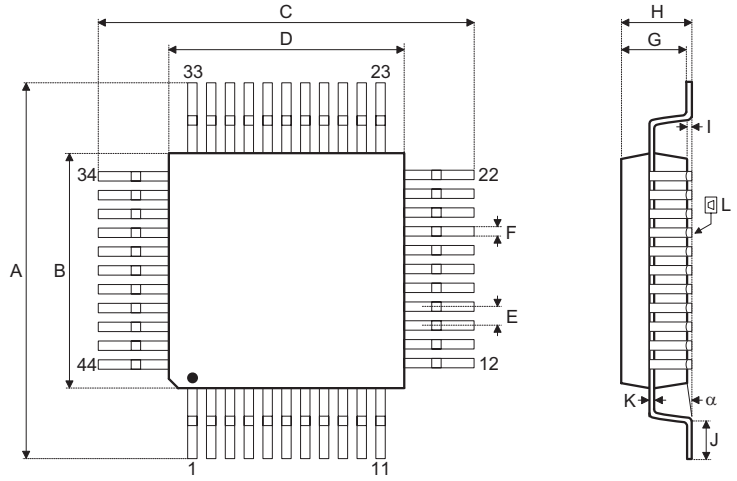

Symbol	Dimensions in mm		
	Min.	Nom.	Max.
A	13	—	13.4
B	9.9	—	10.1
C	13	—	13.4
D	9.9	—	10.1
E	—	0.8	—
F	—	0.3	—
G	1.9	—	2.2
H	—	—	2.7
I	0.25	—	0.5
J	0.73	—	0.93
K	0.1	—	0.2
L	—	0.1	—
α	0°	—	7°

Holtek Semiconductor Inc. (Headquarters)
No.3, Creation Rd. II, Science Park, Hsinchu, Taiwan
Tel: 886-3-563-1999
Fax: 886-3-563-1189
http://www.holtek.com.tw

Holtek Semiconductor Inc. (Taipei Sales Office)
4F-2, No. 3-2, YuanQu St., Nankang Software Park, Taipei 115, Taiwan
Tel: 886-2-2655-7070
Fax: 886-2-2655-7373
Fax: 886-2-2655-7383 (International sales hotline)

Holtek Semiconductor Inc. (Shanghai Sales Office)
7th Floor, Building 2, No.889, Yi Shan Rd., Shanghai, China 200233
Tel: 86-21-6485-5560
Fax: 86-21-6485-0313
http://www.holtek.com.cn

Holtek Semiconductor Inc. (Shenzhen Sales Office)
5/F, Unit A, Productivity Building, Cross of Science M 3rd Road and Gaoxin M 2nd Road, Science Park, Nanshan District, Shenzhen, China 518057
Tel: 86-755-8616-9908, 86-755-8616-9308
Fax: 86-755-8616-9533

Holtek Semiconductor Inc. (Beijing Sales Office)
Suite 1721, Jinyu Tower, A129 West Xuan Wu Men Street, Xicheng District, Beijing, China 100031
Tel: 86-10-6641-0030, 86-10-6641-7751, 86-10-6641-7752
Fax: 86-10-6641-0125

Holtek Semiconductor Inc. (Chengdu Sales Office)
709, Building 3, Champagne Plaza, No.97 Dongda Street, Chengdu, Sichuan, China 610016
Tel: 86-28-6653-6590
Fax: 86-28-6653-6591

Holmate Semiconductor, Inc. (North America Sales Office)
46729 Fremont Blvd., Fremont, CA 94538
Tel: 1-510-252-9880
Fax: 1-510-252-9885
http://www.holmate.com

Copyright © 2006 by HOLTEK SEMICONDUCTOR INC.

The information appearing in this Data Sheet is believed to be accurate at the time of publication. However, Holtek assumes no responsibility arising from the use of the specifications described. The applications mentioned herein are used solely for the purpose of illustration and Holtek makes no warranty or representation that such applications will be suitable without further modification, nor recommends the use of its products for application that may present a risk to human life due to malfunction or otherwise. Holtek's products are not authorized for use as critical components in life support devices or systems. Holtek reserves the right to alter its products without prior notification. For the most up-to-date information, please visit our web site at http://www.holtek.com.tw.