查询UPA80C供应商 捷多邦，专业PCB打样工厂，24小时加急出货

NEC ELECTRON DEVICE

TRANSISTOR ARRAY
μPA80C

FLUORESCENT INDICATOR PANEL DRIVER
PNP-NPN SILICON EPITAXIAL TRANSISTOR ARRAY

DESCRIPTION

The μPA80C is a monolithic array of seven PNP-NPN structured transistors. This device is especially suited for driving FIP (Fluorescent Indicator Panel).

PACKAGE DIMENSIONS

in millimeters

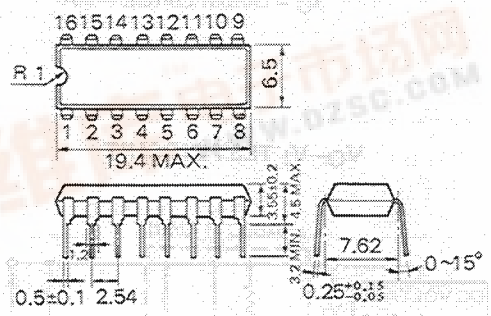

FEATURES

- High voltage rating V_{SS}: −60 V
- Pull down resistors incorporated
- Base current limiting resistors incorporated
- Package is 16 pin plastic DIP (Dual In-Line Package).

ABSOLUTE MAXIMUM RATINGS

Maximum Voltages and Currents (Ta=25 °C)

Supply Voltage	V_{SS}	−60	V
Input Voltage	V_I	−20	V
Output Current	I_O	50	mA/unit
Maximum Power Dissipation			
Total Power Dissipation	P_d	550	mW
Maximum Temperature			
Storage Temperature	T_{stg}	−40 to +125	°C
Operating Temperature	T_{opt}	−25 to + 75	°C

ELECTRICAL CHARACTERISTICS (Ta=25 °C)

CHARACTERISTIC	SYMBOL	MIN.	TYP.	MAX.	UNIT	TEST CONDITIONS
Output Leakage Current	I_L			1.0	μA	V_{CE}=50 V
DC Current Gain	h_{FE1}	100	280			V_{CE}=2.0 V, I_O=20 mA
	h_{FE2}	250	450			V_{CE}=2.0 V, I_O=40 mA
Collector Saturation Voltage	$V_{CE(sat)}$		0.95	1.5	V	I_O=20 mA, I_I=0.3 mA
Input Current	I_I			1.0	mA	V_I=−5.0 V

EQUIVALENT CIRCUIT

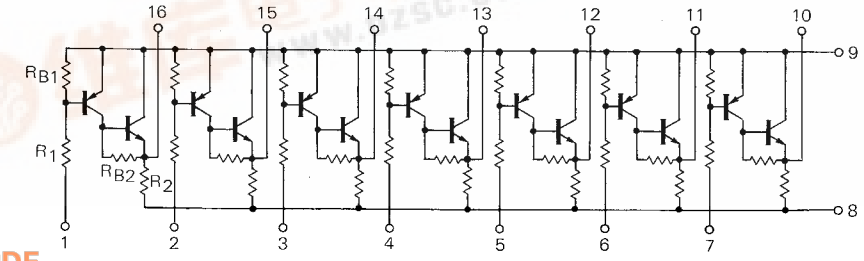

R_{B1} : 20 kΩ
R_1 : 20 kΩ
R_{B2} : 2 kΩ
R_2 : 100 kΩ

CONNECTION DIAGRAM (Top View)

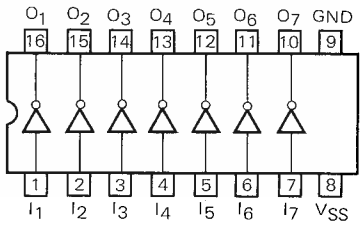

I=Input (Base)
O=Output

找PDF 维库一下 pdf.dzsc.com

TYPICAL CHARACTERISTICS (Ta=25 °C)

DC CURRENT GAIN vs. OUTPUT CURRENT

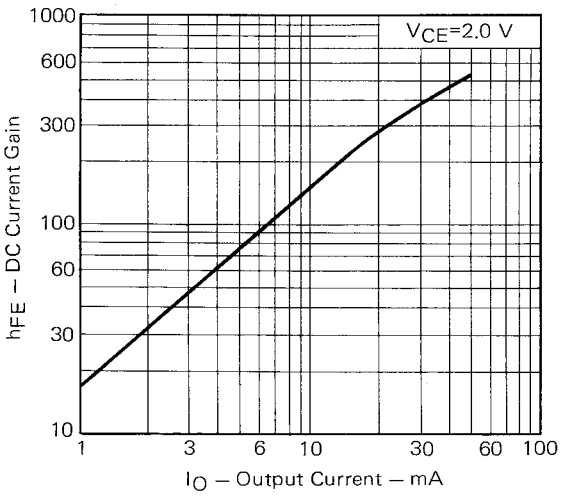

COLLECTOR SATURATION VOLTAGE vs. OUTPUT CURRENT

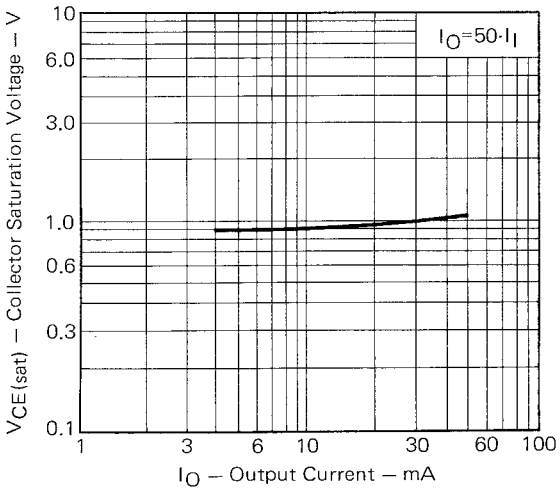

OUTPUT VOLTAGE vs. INPUT VOLTAGE

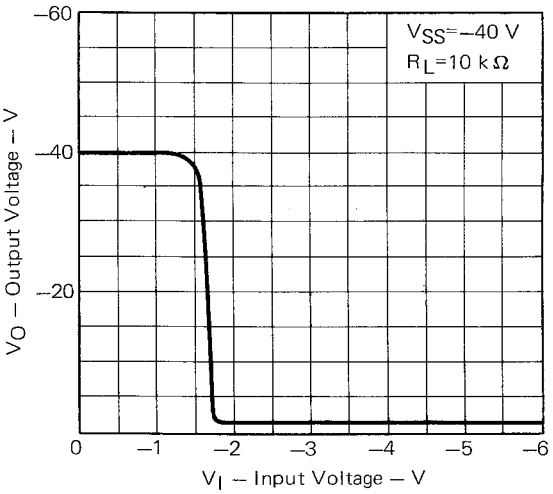
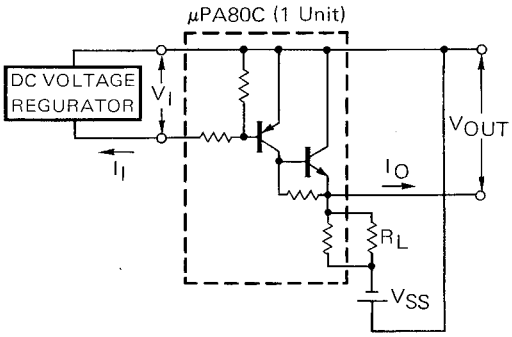
V_O–V_I TEST CIRCUIT