查询2SA1577供应商 捷多邦，专业PCB打样工厂，24小时加急出货

Medium Power Transistor

2SA1577

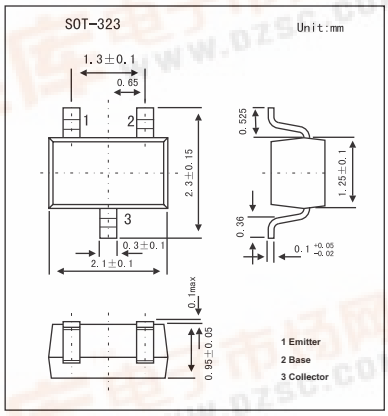

■ Features

- Large I_C.I_{CMAX}. = -500mA
- Low $V_{CE(sat)}$. Ideal for low-voltage operation.

■ Absolute Maximum Ratings Ta = 25℃

Parameter	Symbol	Rating	Unit
Collector-base voltage	V_{CBO}	-40	V
Collector-emitter voltage	V_{CEO}	-32	V
Emitter-base voltage	V_{EBO}	-5	V
Collector current	I_C	-0.5	A
Collector power dissipation	P_C	0.2	W
Junction temperature	T_j	150	℃
Storage temperature	T_{stg}	-55 to +150	℃

■ Electrical Characteristics Ta = 25℃

Parameter	Symbol	Testconditons	Min	Typ	Max	Unit
Collector-base breakdown voltage	BV_{CBO}	I_C= -100μA	-40			V
Collector-emitter breakdown voltage	BV_{CEO}	I_C= -1mA	-32			V
Emitter-base breakdown voltage	BV_{EBO}	I_E= -100μA	-5			V
Collector cutoff current	I_{CBO}	V_{CB}= -20V			-1	μA
Emitter cutoff current	I_{EBO}	V_{EB}= -4V			-1	μA
Collector-emitter saturation voltage	$V_{CE(sat)}$	V_{CE}= -3V, I_C= -100mA			-0.6	V
DC current transfer ratio	h_{FE}	I_C/I_B= -300mA/-30mA	82		390	
Transition frequency	f_T	V_{CE}= -5V, I_E=20mA, f=100MHz		200		MHz
Output capacitance	C_{ob}	V_{CB}= -10V, I_E=0A, f=1MHz		7		pF

■ h_{FE} Classification

Marking	HP	HQ	HR
h_{FE}	82～180	120～270	180～390

找PDF 维库一下 pdf.dzsc.com