查询2SB1205供应商 捷多邦，专业PCB打样工厂，24小时加急出货

Strobe High-Current Switching Applications

2SB1205

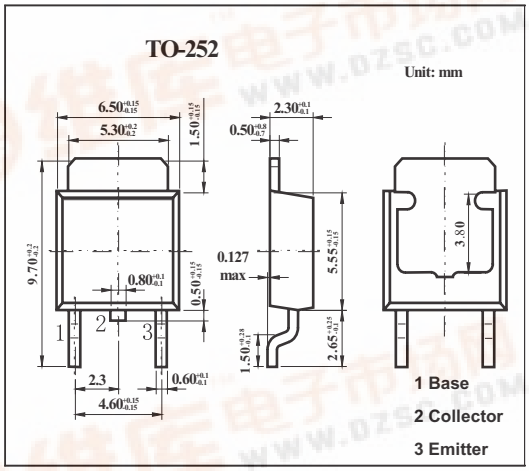

■ Features

- Low saturation voltage.
- Fast switching speed.
- Large current capacity.

■ Absolute Maximum Ratings Ta = 25℃

Parameter	Symbol	Rating	Unit
Collector-base voltage	V_{CBO}	-25	V
Collector-emitter voltage	V_{CEO}	-20	V
Emitter-base voltage	V_{EBO}	-5	V
Collector current	I_C	-5	A
Collector current (pulse)	I_{CP}	-8	A
Base current	I_B	-0.5	A
Collector dissipation	P_C	1	W
T_C = 25℃		10	W
Jumction temperature	T_j	150	℃
Storage temperature	T_{stg}	-55 to +150	℃

找PDF 维库一下 pdf.dzsc.com

2SB1205

■ Electrical Characteristics Ta = 25℃

Parameter	Symbol	Testconditons	Min	Typ	Max	Unit
Collector cutoff current	I_{CBO}	V_{CB} = -20V , I_E = 0			-500	μA
Emitter cutoff current	I_{EBO}	V_{EB} = -4V , I_C = 0			-500	μA
DC current Gain	h_{FE}	V_{CE} = -2V , I_C = -500mA	100		400	
		V_{CE} = -2V , I_C = -4A	60			
Gain bandwidth product	f_T	V_{CE} = -5V , I_C = -200mA		320		MHz
Output capacitance	C_{ob}	V_{CB} = -10V , f = 1MHz		60		pF
Collector-emitter saturation voltage	$V_{CE(sat)}$	I_C = -3A , I_B = -60mA		-250	-500	mV
Base-to-emitter saturation voltage	$V_{BE(sat)}$	I_C = -3A , I_B = -60mA		-1	-1.3	V
Collector-to-base breakdown voltage	$V_{(BR)CBO}$	I_C = -10μA , I_E = 0	-25			V
Collector-to-emitter breakdown voltage	$V_{(BR)CEO}$	I_C = -1mA , R_{BE} = ∞	-20			V
Emitter-to-base breakdown voltage	$V_{(BR)EBO}$	I_E = -10μA , I_C = 0	-5			V
Turn-on time	t_{on}	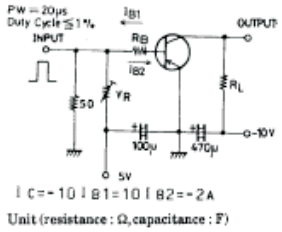		40		ns
Storage time	t_{stg}			200		ns
Fall time	t_f			10		ns

■ h_{FE} Classification

Rank	R	S	T
hFE	100～200	140～280	200～400