FAIRCHILD™

Is Now Part of

ON Semiconductor®

To learn more about ON Semiconductor, please visit our website at
www.onsemi.com

ON Semiconductor and the ON Semiconductor logo are trademarks of Semiconductor Components Industries, LLC dba ON Semiconductor or its subsidiaries in the United States and/or other countries. ON Semiconductor owns the rights to a number of patents, trademarks, copyrights, trade secrets, and other intellectual property. A listing of ON Semiconductor's product/patent coverage may be accessed at www.onsemi.com/site/pdf/Patent-Marking.pdf. ON Semiconductor reserves the right to make changes without further notice to any products herein. ON Semiconductor makes no warranty, representation or guarantee regarding the suitability of its products for any particular purpose, nor does ON Semiconductor assume any liability arising out of the application or use of any product or circuit, and specifically disclaims any and all liability, including without limitation special, consequential or incidental damages. Buyer is responsible for its products and applications using ON Semiconductor products, including compliance with all laws, regulations and safety requirements or standards, regardless of any support or applications information provided by ON Semiconductor. "Typical" parameters which may be provided in ON Semiconductor data sheets and/or specifications can and do vary in different applications and actual performance may vary over time. All operating parameters, including "Typicals" must be validated for each customer application by customer's technical experts. ON Semiconductor does not convey any license under its patent rights nor the rights of others. ON Semiconductor products are not designed, intended, or authorized for use as a critical component in life support systems or any FDA Class 3 medical devices or medical devices with a same or similar classification in a foreign jurisdiction or any devices intended for implantation in the human body. Should Buyer purchase or use ON Semiconductor products for any such unintended or unauthorized application, Buyer shall indemnify and hold ON Semiconductor and its officers, employees, subsidiaries, affiliates, and distributors harmless against all claims, costs, damages, and expenses, and reasonable attorney fees arising out of, directly or indirectly, any claim of personal injury or death associated with such unintended or unauthorized use, even if such claim alleges that ON Semiconductor was negligent regarding the design or manufacture of the part. ON Semiconductor is an Equal Opportunity/Affirmative Action Employer. This literature is subject to all applicable copyright laws and is not for resale in any manner.

FAIRCHILD SEMICONDUCTOR®

October 2008

PN100/PN100A/MMBT100/MMBT100A

NPN General Purpose Amplifier

- This device is designed for general purpose amplifier applications at collector currents to 300mA.
- Sourced from process 10.

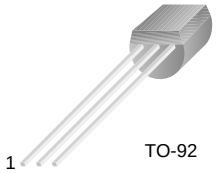

TO-92

1. Emitter 2. Base 3. Collector
Mark: PN100/PN100A

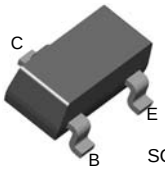

SOT-23

Absolute Maximum Ratings* T_a = 25°C unless otherwise noted

Symbol	Parameter	Ratings	Units
V_{CEO}	Collector-Emitter Voltage		45
V_{CBO}	Collector-Base Voltage		75
V_{EBO}	Emitter-Base Voltage		6.0
I_C	Collector current	- Continuous	500
T_J, T_{stg}	Junction and Storage Temperature		-55 ~ +150

* These ratings are limiting values above which the serviceability of any semiconductor device may be impaired.

NOTES:
1. These ratings are based on a maximum junction temperature of 150 degrees C.
2. These are steady state limits. The factory should be consulted on applications involving pulsed or low duty cycle operations.

* Pulse Test: Pulse Width≤300μs, Duty Cycle≤2%

Thermal Characteristics T_A=25°C unless otherwise noted

Symbol	Parameter	Max.		Units
		PN100 PN100A	*MMBT100 *MMBT100A	
P_D	Total Device Dissipation Derate above 25°C	625 5.0	350 2.8	mW mW/°C
$R_{\theta JC}$	Thermal Resistance, Junction to Case	83.3		°C/W
$R_{\theta JA}$	Thermal Resistance, Junction to Ambient	200	357	°C/W

* Device mounted on FR-4 PCB 1.6" × 1.6" × 0.06."

© 2008 Fairchild Semiconductor Corporation

Electrical Characteristics T_C=25°C unless otherwise noted

Symbol	Parameter	Test Condition		Min.	Max.	Units
Off Characteristics						
BV_{CBO}	Collector-Base Breakdown Voltage	I_C = 10μA, I_E = 0		75		V
BV_{CEO}	Collector-Emitter Breakdown Voltage *	I_C = 1mA, I_B = 0		45		V
BV_{EBO}	Emitter-Base Breakdown Voltage	I_E = 10μA, I_C = 0		6.0		V
I_{CBO}	Collector-Base Cutoff Current	V_{CB} = 60V			50	nA
I_{CES}	Collector-Emiitter Cutoff Current	V_{CE} = 40V			50	nA
I_{EBO}	Emitter Cutoff Current	V_{EB} = 4V			50	nA
On Characteristics						
h_{FE}	DC Current Gain	I_C = 100μA, V_{CE} = 1.0V	100	80		
			100A	240		
		I_C = 10mA, V_{CE} = 1.0V	100	100	450	
			100A	300	600	
		I_C = 100mA, V_{CE} = 1.0V*		100		
		I_C = 150mA, V_{CE} = 5.0V *	100	100	350	
			100A	100		
$V_{CE(sat)}$	Collector-Emitter Saturation Voltage	I_C = 10mA, I_B = 1.0mA			0.2	V
		I_C = 200mA, I_B = 20mA			0.4	V
$V_{BE(sat)}$	Base-Emitter Saturation Voltage	I_C = 10mA, I_B = 1.0mA			0.85	V
		I_C = 200mA, I_B = 20mA			1.0	V
Small Signal Characteristics						
f_T	Current Gain Bandwidth Product	V_{CE} = 20V, I_C = 20mA		250		MHz
C_{obo}	Output Capacitance	V_{CB} = 5.0V, f = 1.0MHz			4.5	pF
NF	Noise Figure	I_C = 100μA, V_{CE} = 5.0V	100		5.0	dB
		R_G = 2.0kΩ, f = 1.0KHz	100A		4.0	dB

* Pulse Test: Pulse Width ≤ 300μs, Duty Cycle ≤ 2.0%

© 2008 Fairchild Semiconductor Corporation

Typical Characteristics

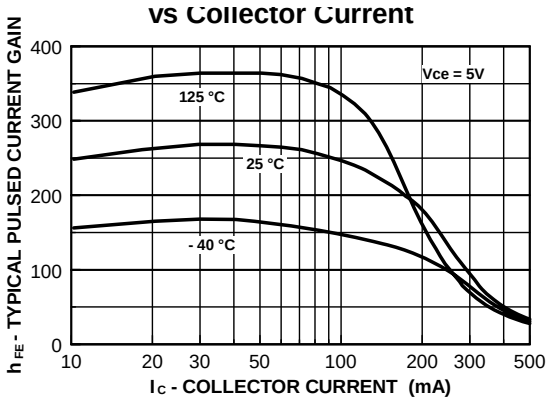

Figure 1. Typical Pulsed Current Gain vs Collector Current

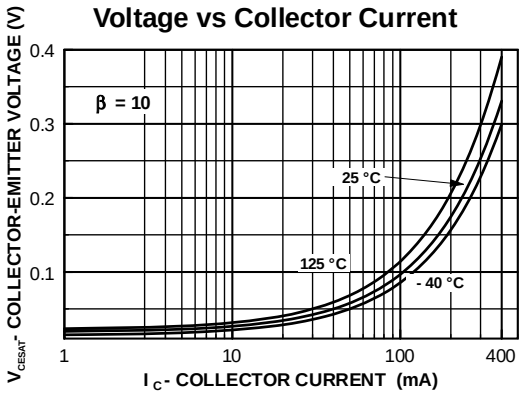

Figure 2. Collector-Emitter Saturation Voltage vs Collector Current

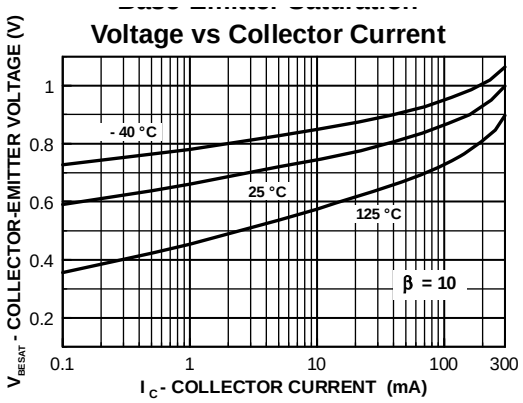

Figure 3. Base-Emitter Saturation Voltage vs Collector Current

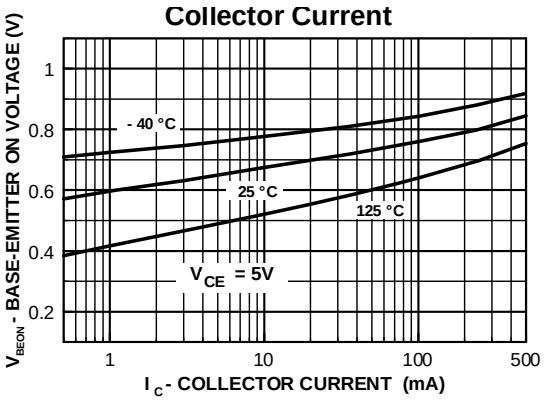

Figure 4. Base-Emitter On Voltage vs Collector Current

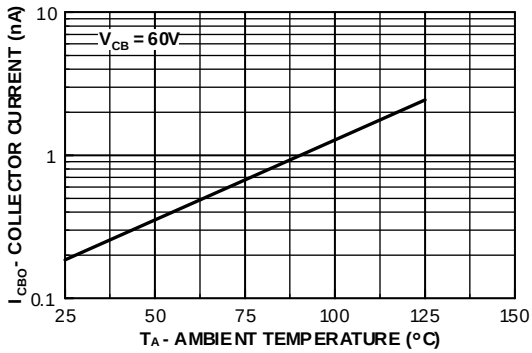

Figure 5. Collector Cutoff Current vs Ambient Temperature

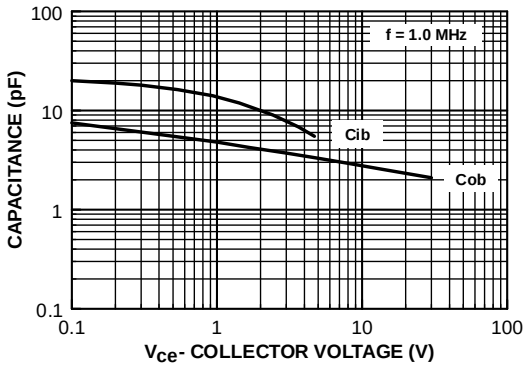

Figure 6. Input and Output Capacitance vs Reverse Voltag

Typical Characteristics (Continued)

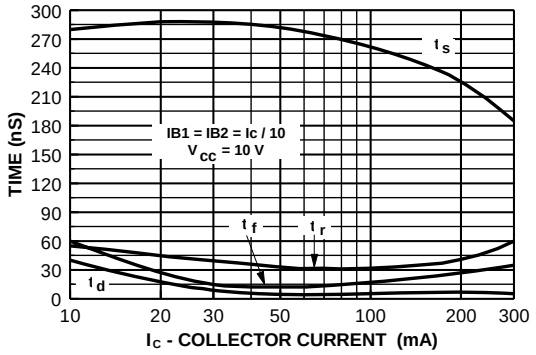

Figure 7. Switching Times vs Collector Current

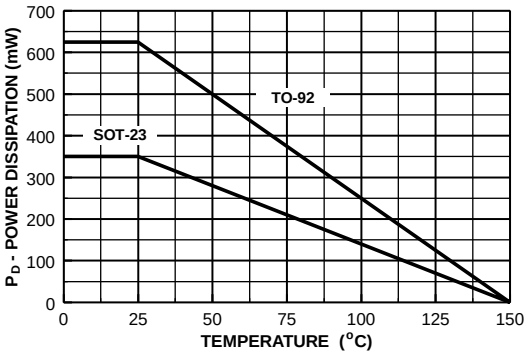

Figure 8. Power Dissipation vs Ambient Temperature

Package Dimension (TO92)

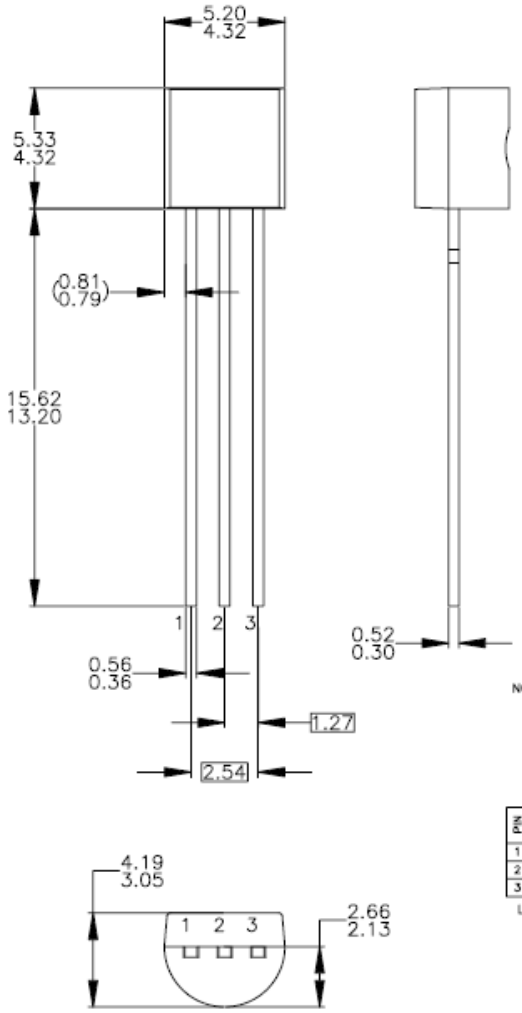

NOTES: UNLESS OTHERWISE SPECIFIED

A) DRAWING WITH REFERENCE TO JEDEC TO-92 RECOMMENDATIONS.
B) ALL DIMENSIONS ARE IN MILLIMETERS.
C) DRAWING CONFORMS TO ASME Y14.5M-1994.
D) TO-92 (92,94,96,97,98) PIN CONFIGURATION:

PIN	92			94			96			97			98		
	P	F	M	P	F	M	B	F	M	P	F	M	P	F	M
1	E	S	S	E	S	S	B	D	G	C	G	D	C	G	D
2	B	D	G	C	G	D	E	S	S	B	D	G	E	S	S
3	C	G	D	B	D	G	C	G	D	E	S	S	B	D	G

LEGEND:

P – BIPOLAR E – EMITTER D – DRAIN
F – JFET B – BASE S – SOURCE
M – DMOS C – COLLECTOR G – GATE

E) FOR PACKAGE 92, 94, 96, 97 AND 98: PIN CONFIGURATION DRAIN "D" AND SOURCE "S" ARE INTERCHANGEAGLE AT JFET "F" OPTION.
F) DRAWING FILENAME: MKT-ZA03DREV3.

Package Dimension (SOT23)

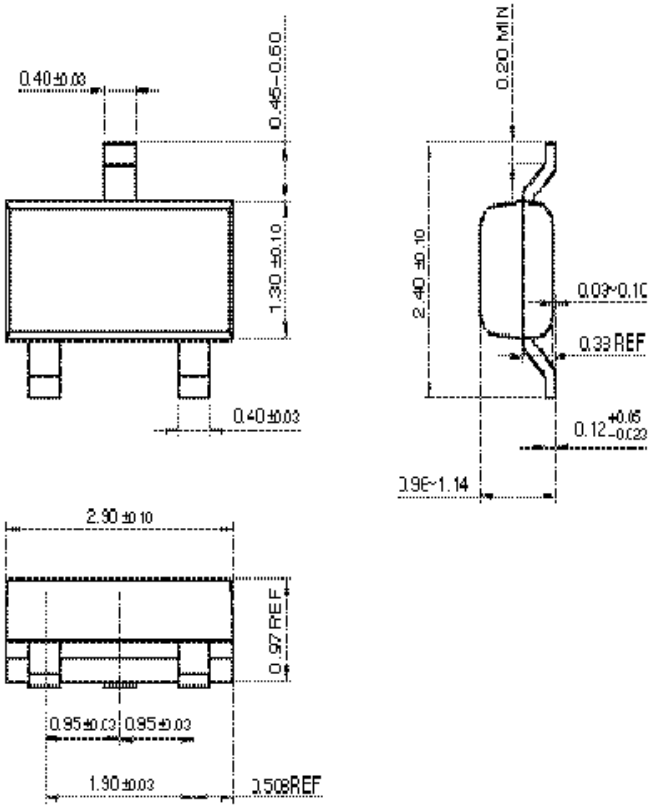

FAIRCHILD SEMICONDUCTOR®

TRADEMARKS

The following are registered and unregistered trademarks and service marks Fairchild Semiconductor owns or is authorized to use and is not intended to be an exhaustive list of all such trademarks.

ACEx®
Build it Now™
CorePLUS™
CROSSVOLT™
CTL™
Current Transfer Logic™
EcoSPARK®
Fairchild®
Fairchild Semiconductor®
FACT Quiet Series™
FACT®
FAST®
FastvCore™
FPS™
FRFET®
Global Power Resource℠
Green FPS™
Green FPS™ e-Series™
GTO™
i-Lo™
IntelliMAX™
ISOPLANAR™
MegaBuck™
MICROCOUPLER™
MicroFET™
MicroPak™
MillerDrive™
Motion-SPM™
OPTOLOGIC®
OPTOPLANAR®
PDP-SPM™
Power220®
Power247®
POWEREDGE®
Power-SPM™
PowerTrench®
Programmable Active Droop™
QFET®
QS™
QT Optoelectronics™
Quiet Series™
RapidConfigure™
SMART START™
SPM®
STEALTH™
SuperFET™
SuperSOT™-3
SuperSOT™-6
SuperSOT™-8
SyncFET™
The Power Franchise®
TinyBoost™
TinyBuck™
TinyLogic®
TINYOPTO™
TinyPower™
TinyPWM™
TinyWire™
µSerDes™
UHC®
UniFET™
VCX™

DISCLAIMER

FAIRCHILD SEMICONDUCTOR RESERVES THE RIGHT TO MAKE CHANGES WITHOUT FURTHER NOTICE TO ANY PRODUCTS HEREIN TO IMPROVE RELIABILITY, FUNCTION, OR DESIGN. FAIRCHILD DOES NOT ASSUME ANY LIABILITY ARISING OUT OF THE APPLICATION OR USE OF ANY PRODUCT OR CIRCUIT DESCRIBED HEREIN; NEITHER DOES IT CONVEY ANY LICENSE UNDER ITS PATENT RIGHTS, NOR THE RIGHTS OF OTHERS. THESE SPECIFICATIONS DO NOT EXPAND THE TERMS OF FAIRCHILD'S WORLDWIDE TERMS AND CONDITIONS, SPECIFICALLY THE WARRANTY THEREIN, WHICH COVERS THESE PRODUCTS.

LIFE SUPPORT POLICY

FAIRCHILD'S PRODUCTS ARE NOT AUTHORIZED FOR USE AS CRITICAL COMPONENTS IN LIFE SUPPORT DEVICES OR SYSTEMS WITHOUT THE EXPRESS WRITTEN APPROVAL OF FAIRCHILD SEMICONDUCTOR CORPORATION.

As used herein:

1. Life support devices or systems are devices or systems which, (a) are intended for surgical implant into the body, or (b) support or sustain life, and (c) whose failure to perform when properly used in accordance with instructions for use provided in the labeling, can be reasonably expected to result in significant injury to the user.
2. A critical component is any component of a life support device or system whose failure to perform can be reasonably expected to cause the failure of the life support device or system, or to affect its safety or effectiveness.

PRODUCT STATUS DEFINITIONS

Definition of Terms

Datasheet Identification	Product Status	Definition
Advance Information	Formative or In Design	This datasheet contains the design specifications for product development. Specifications may change in any manner without notice.
Preliminary	First Production	This datasheet contains preliminary data; supplementary data will be published at a later date. Fairchild Semiconductor reserves the right to make changes at any time without notice to improve design.
No Identification Needed	Full Production	This datasheet contains final specifications. Fairchild Semiconductor reserves the right to make changes at any time without notice to improve design.
Obsolete	Not In Production	This datasheet contains specifications on a product that has been discontinued by Fairchild semiconductor. The datasheet is printed for reference information only.

Rev. I31

© 2008 Fairchild Semiconductor Corporation

ON Semiconductor and ON are trademarks of Semiconductor Components Industries, LLC dba ON Semiconductor or its subsidiaries in the United States and/or other countries. ON Semiconductor owns the rights to a number of patents, trademarks, copyrights, trade secrets, and other intellectual property. A listing of ON Semiconductor's product/patent coverage may be accessed at www.onsemi.com/site/pdf/Patent−Marking.pdf. ON Semiconductor reserves the right to make changes without further notice to any products herein. ON Semiconductor makes no warranty, representation or guarantee regarding the suitability of its products for any particular purpose, nor does ON Semiconductor assume any liability arising out of the application or use of any product or circuit, and specifically disclaims any and all liability, including without limitation special, consequential or incidental damages. Buyer is responsible for its products and applications using ON Semiconductor products, including compliance with all laws, regulations and safety requirements or standards, regardless of any support or applications information provided by ON Semiconductor. "Typical" parameters which may be provided in ON Semiconductor data sheets and/or specifications can and do vary in different applications and actual performance may vary over time. All operating parameters, including "Typicals" must be validated for each customer application by customer's technical experts. ON Semiconductor does not convey any license under its patent rights nor the rights of others. ON Semiconductor products are not designed, intended, or authorized for use as a critical component in life support systems or any FDA Class 3 medical devices or medical devices with a same or similar classification in a foreign jurisdiction or any devices intended for implantation in the human body. Should Buyer purchase or use ON Semiconductor products for any such unintended or unauthorized application, Buyer shall indemnify and hold ON Semiconductor and its officers, employees, subsidiaries, affiliates, and distributors harmless against all claims, costs, damages, and expenses, and reasonable attorney fees arising out of, directly or indirectly, any claim of personal injury or death associated with such unintended or unauthorized use, even if such claim alleges that ON Semiconductor was negligent regarding the design or manufacture of the part. ON Semiconductor is an Equal Opportunity/Affirmative Action Employer. This literature is subject to all applicable copyright laws and is not for resale in any manner.

PUBLICATION ORDERING INFORMATION

LITERATURE FULFILLMENT:
Literature Distribution Center for ON Semiconductor
19521 E. 32nd Pkwy, Aurora, Colorado 80011 USA
Phone: 303−675−2175 or 800−344−3860 Toll Free USA/Canada
Fax: 303−675−2176 or 800−344−3867 Toll Free USA/Canada
Email: orderlit@onsemi.com

N. American Technical Support: 800−282−9855 Toll Free USA/Canada
Europe, Middle East and Africa Technical Support:
Phone: 421 33 790 2910
Japan Customer Focus Center
Phone: 81−3−5817−1050

ON Semiconductor Website: **www.onsemi.com**

Order Literature: http://www.onsemi.com/orderlit

For additional information, please contact your local Sales Representative