查询AP4300供应商 捷多邦，专业PCB打样工厂，24小时加急出货

Advanced Analog Circuits

Data Sheet

DUAL OP AMP AND VOLTAGE REFERENCE AP4300

General Description

The AP4300 is a monolithic IC specifically designed to regulate the output current and voltage levels of switching battery chargers and power supplies.

The device contains two operational amplifiers and a precision shunt regulator. Op Amp 1 is designed for voltage control, whose non-inverting input internally connects to the output of the shunt regulator. Op Amp 2 is for current control with both inputs uncommitted. The IC offers the power converter designer a control solution that features increased precision with a corresponding reduction in system complexity and cost.

The AP4300 is available in standard packages of DIP-8 and SOIC-8.

Features

Op Amp

- Input Offset Voltage: 0.5mV
- Supply Current: 250μA per Op Amp at 5.0V Supply Voltage
- Unity Gain Bandwidth: 1MHz
- Output Voltage Swing: 0 to (V_{CC}-1.5) V
- Power Supply Range: 3 to 18V

Voltage Reference

- Fixed Output Voltage Reference: 2.5V, 2.6V
- Voltage Tolerance: 0.5%, 1%
- Sink Current Capability from 0.1 to 80mA

Applications

- Battery Charger
- Switching Power Supply

www.DataSheet4U.com

Figure 1. Package Types of AP4300

找PDF 维库一下 pdf.dzsc.com

Pin Configuration

M Package/P Package
(SOIC-8/DIP-8)

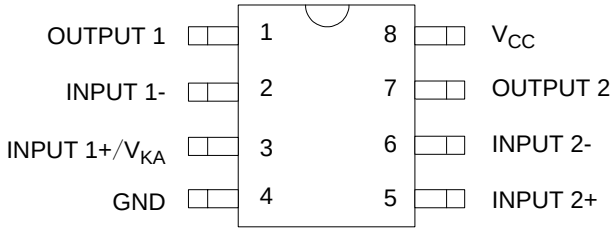

Top View

Figure 2. Pin Configuration of AP4300

Functional Block Diagram

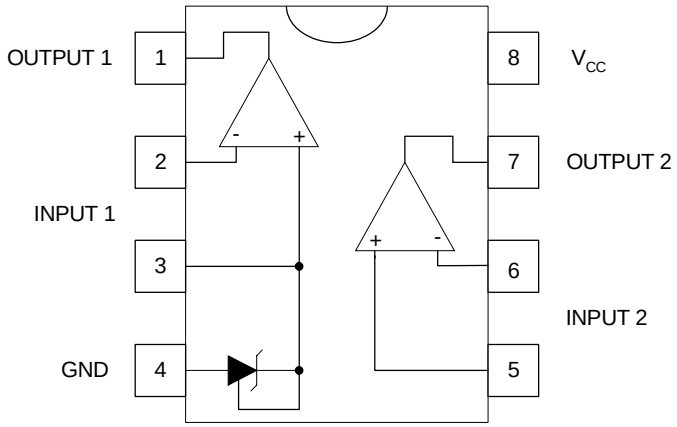

Figure 3. Functional Block Diagram of AP4300

Functional Block Diagram (Continued)

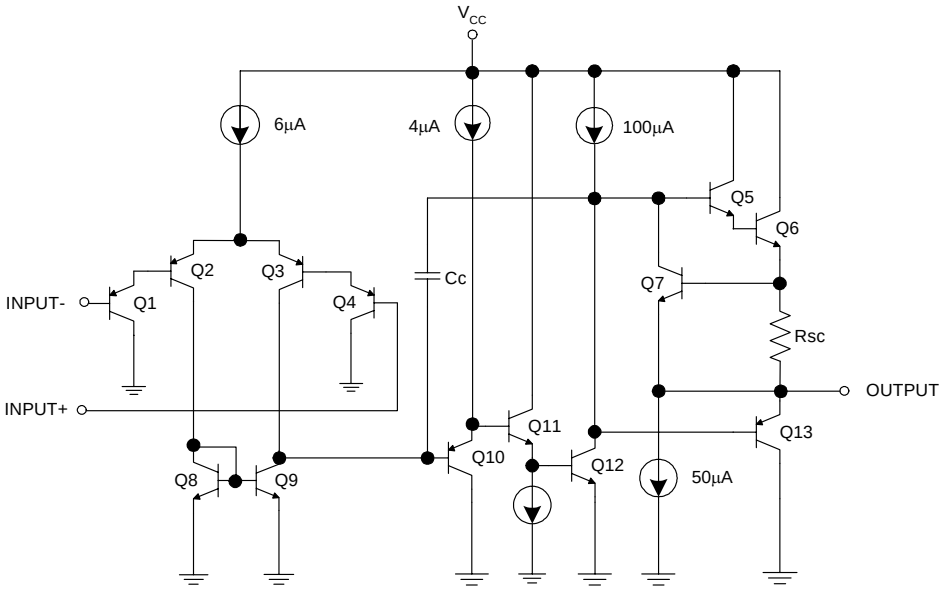

Figure 4. Op Amp Functional Block Diagram
(Each Amplifier)

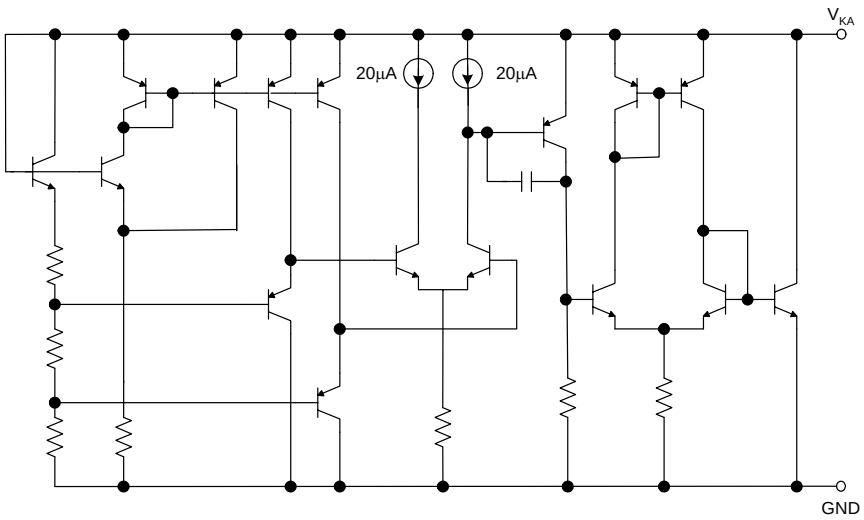

Figure 5. Voltage Reference Functional Block Diagram

Ordering Information

AP4300 □ □ - □ □ □

Circuit Type

Voltage Tolerance
A: 0.5%
B: 1%

Package
M: SOIC-8
P: DIP-8

E1: Lead Free
Blank: Tin Lead

TR: Tape and Reel
Blank: Tube

Output Voltage Reference
A: 2.6V
B: 2.5V

Package	Reference Voltage	Voltage Tolerance	Temperature Range	Part Number		Marking ID		Packing Type
				Tin Lead	Lead Free	Tin Lead	Lead Free	
DIP-8	2.6V	0.5%	-40 to 105°C	AP4300AP-A	AP4300AP-AE1	AP4300AP-A	AP4300AP-AE1	Tube
		1%		AP4300BP-A	AP4300BP-AE1	AP4300BP-A	AP4300BP-AE1	
	2.5V	0.5%		AP4300AP-B	AP4300AP-BE1	AP4300AP-B	AP4300AP-BE1	
		1%		AP4300BP-B	AP4300BP-BE1	AP4300BP-B	AP4300BP-BE1	
SOIC-8	2.6V	0.5%	-40 to 105°C	AP4300AM-A	AP4300AM-AE1	AP4300AM-A	AP4300AM-AE1	Tube
				AP4300AM-ATR	AP4300AM-ATRE1	AP4300AM-A	AP4300AM-AE1	Tape & Reel
		1%		AP4300BM-A	AP4300BM-AE1	AP4300BM-A	AP4300BM-AE1	Tube
				AP4300BM-ATR	AP4300BM-ATRE1	AP4300BM-A	AP4300BM-AE1	Tape & Reel
	2.5V	0.5%		AP4300AM-B	AP4300AM-BE1	AP4300AM-B	AP4300AM-BE1	Tube
				AP4300AM-BTR	AP4300AM-BTRE1	AP4300AM-B	AP4300AM-BE1	Tape & Reel
		1%		AP4300BM-B	AP4300BM-BE1	AP4300BM-B	AP4300BM-BE1	Tube
				AP4300BM-BTR	AP4300BM-BTRE1	AP4300BM-B	AP4300BM-BE1	Tape & Reel

BCD Semiconductor's Pb-free products, as designated with "E1" suffix in the part number, are RoHS compliant.

Absolute Maximum Ratings (Note 1)

Parameter	Symbol	Value		Unit
Power Supply Voltage (V_{CC} to GND)	V_{CC}	20		V
Op Amp 1 and 2 Input Voltage Range (Pins 2, 5, 6)	V_{IN}	-0.3 to V_{CC}+0.3		V
Op Amp 2 Input Differential Voltage (Pins 5, 6)	V_{ID}	20		V
Voltage Reference Cathode Current (Pin 3)	I_K	100		mA
Power Dissipation (T_A=25°C)	P_D	DIP-8	800	mW
		SOIC-8	500	
Operating Junction Temperature	T_J	150		^{o}C
Storage Temperature Range	T_{STG}	-65 to 150		^{o}C
Lead Temperature (Soldering 10s)	T_L	260		^{o}C

Note 1: Stresses greater than those listed under "Absolute Maximum Ratings" may cause permanent damage to the device. These are stress ratings only, and functional operation of the device at these or any other conditions beyond those indicated under "Recommended Operating Conditions" is not implied. Exposure to "Absolute Maximum Ratings" for extended periods may affect device reliability.

Recommended Operating Conditions

Parameter	Min	Max	Unit
Supply Voltage	3	18	V
Ambient Temperature	-40	105	^{o}C

Electrical Characteristics

Operating Conditions: V_{CC}=+5V, T_A=25°C unless otherwise specified.

Parameter	Conditions		Min	Typ	Max	Unit
Total Supply Current, Excluding Current in Voltage Reference	V_{CC}=5V, no load, -40°C ≤T_A ≤105°C			0.5	0.8	mA
	V_{CC}=18V, no load, -40°C ≤T_A ≤105°C			0.6	1.2	
Voltage Reference Section						
Reference Voltage for AP4300-A	I_K=10mA, T_A=25°C	0.5% tolerance	2.587	2.600	2.613	V
		1% tolerance	2.574		2.626	
Reference Voltage for AP4300-B	I_K=10mA, T_A=25°C	0.5% tolerance	2.487	2.500	2.513	V
		1% tolerance	2.475		2.525	
Reference Voltage Deviation over Full Temperature Range	I_K=10mA, T_A=-40 to 105°C			5	24	mV
Minimum Cathode Current for Regulation				0.1	1	mA
Dynamic Impedance	I_K=1.0 to 80mA, f<1kHz			0.2	0.5	Ω
Op Amp 1 Section (V_{CC}=5V, V_O=1.4V, T_A=25°C, unless otherwise noted)						
Input Offset Voltage	T_A=25°C			0.5	3	mV
	T_A=-40 to 105°C				5	
Input Offset Voltage Temperature Drift	T_A=-40 to 105°C			7		μV/°C
Input Bias Current (Inverting Input Only)	T_A=25°C			20	150	nA
Large Signal Voltage Gain	V_{CC}=15V, R_L=2KΩ, V_O=1.4 to 11.4V		85	100		dB
Power Supply Rejection Ratio	V_{CC}=5 to 18V		70	90		dB
Output Current	Source	V_{CC}=15V, V_{ID}=1V, V_O=2V	20	40		mA
	Sink	V_{CC}=15V, V_{ID}=-1V, V_O=2V	10	20		mA
Output Voltage Swing (High)	V_{CC}=18V, R_L=10KΩ, V_{ID}=1V		16	16.5		V
Output Voltage Swing (Low)	V_{CC}=18V, R_L=10KΩ, V_{ID}=-1V			17	100	mV
Slew Rate	V_{CC}=18V, R_L=2kΩ, A_V=1, V_{IN}=0.5 to 2V, C_L=100pF		0.2	0.5		V/μ s
Gain Bandwidth Product	V_{CC}=18V, R_L=2kΩ, C_L=100pF, V_{IN}=10mV, f=100kHz		0.7	1		MHz

Electrical Characteristics (Continued)

Operating Conditions: V_{CC}=+5V, T_A=25°C unless otherwise specified.

Parameter		Conditions	Min	Typ	Max	Unit
Op Amp 2 Section (V_{CC}=5V, V_O=1.4V, T_A=25°C, unless otherwise noted)						
Input Offset Voltage		T_A=25°C		0.5	3	mV
		T_A=-40 to 105°C			5	
Input Offset Voltage Temperature Drift		T_A=-40 to 105°C		7		μV/^{o}C
Input Offset Current		T_A=25°C		2	30	nA
Input Bias Current		T_A=25°C		20	150	nA
Input Voltage Range		V_{CC}=0 to 18V	0		V_{CC}-1.5	V
Common Mode Rejection Ratio		T_A=25°C, V_{CM}=0 to 3.5V	70	85		dB
Large Signal Voltage Gain		V_{CC}=15V, R_L=2kΩ, V_O=1.4 to 11.4V	85	100		dB
Power Supply Rejection Ratio		V_{CC}=5 to 18V	70	90		dB
Output Current	Source	V_{CC}=15V, V_{ID}=1V, V_O=2V	20	40		mA
	Sink	V_{CC}=15V, V_{ID}=-1V, V_O=2V	10	20		mA
Output Voltage Swing (High)		V_{CC}=18V, R_L=10kΩ, V_{ID}=1V	16	16.5		V
Output Voltage SWing (Low)		V_{CC}=18V, R_L=10kΩ, V_{ID}=-1V		17	100	mV
Slew Rate		V_{CC}=18V, R_L=2kΩ, A_V=1, V_{IN}=0.5 to 2V, C_L=100pF	0.2	0.5		V/μ s
Gain Bandwidth Product		V_{CC}=18V, R_L=2kΩ, C_L=100pF, V_{IN}=10mV, f=100kHz	0.7	1		MHz

Typical Performance Characteristics

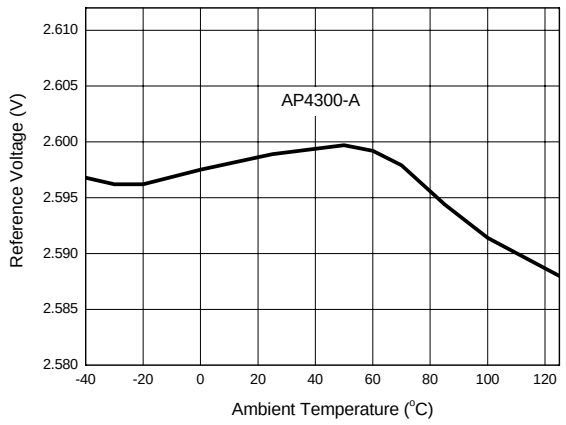

Figure 6. Reference Voltage vs. Ambient Temperature

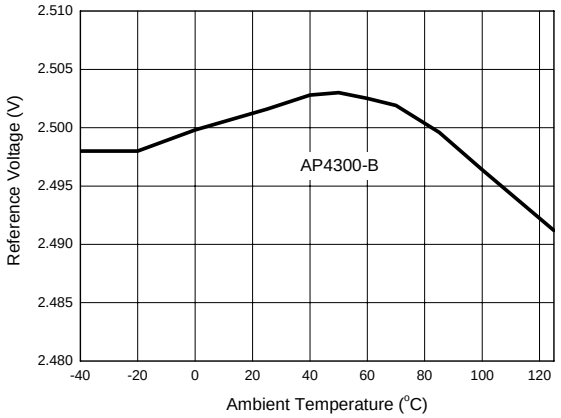

Figure 7. Reference Voltage vs. Ambient Temperature

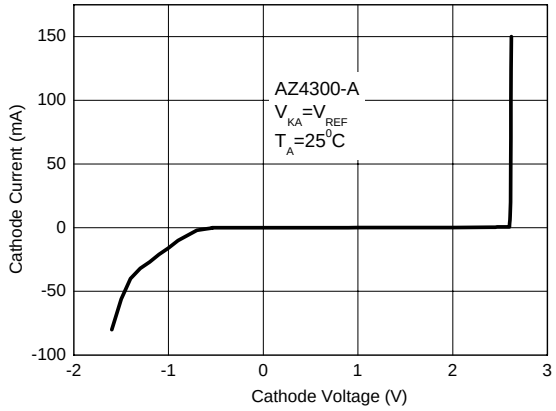

Figure 8. Cathode Current vs. Cathode Voltage

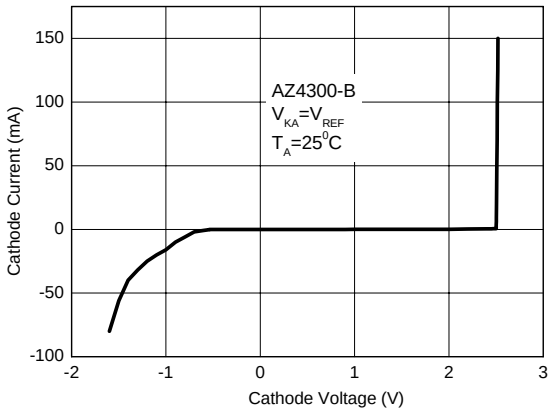

Figure 9. Cathode Current vs. Cathode Voltage

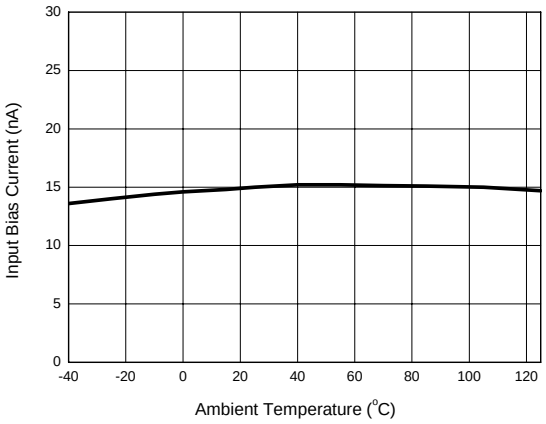

Figure10. Input Bias Current vs. Ambient Temperature

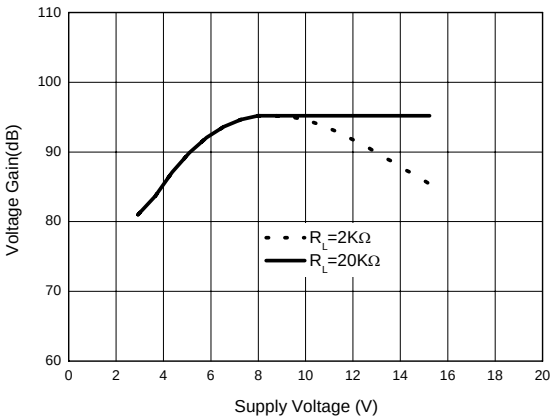

Figure 11. Operational Amplifier Voltage Gain

Typical Application

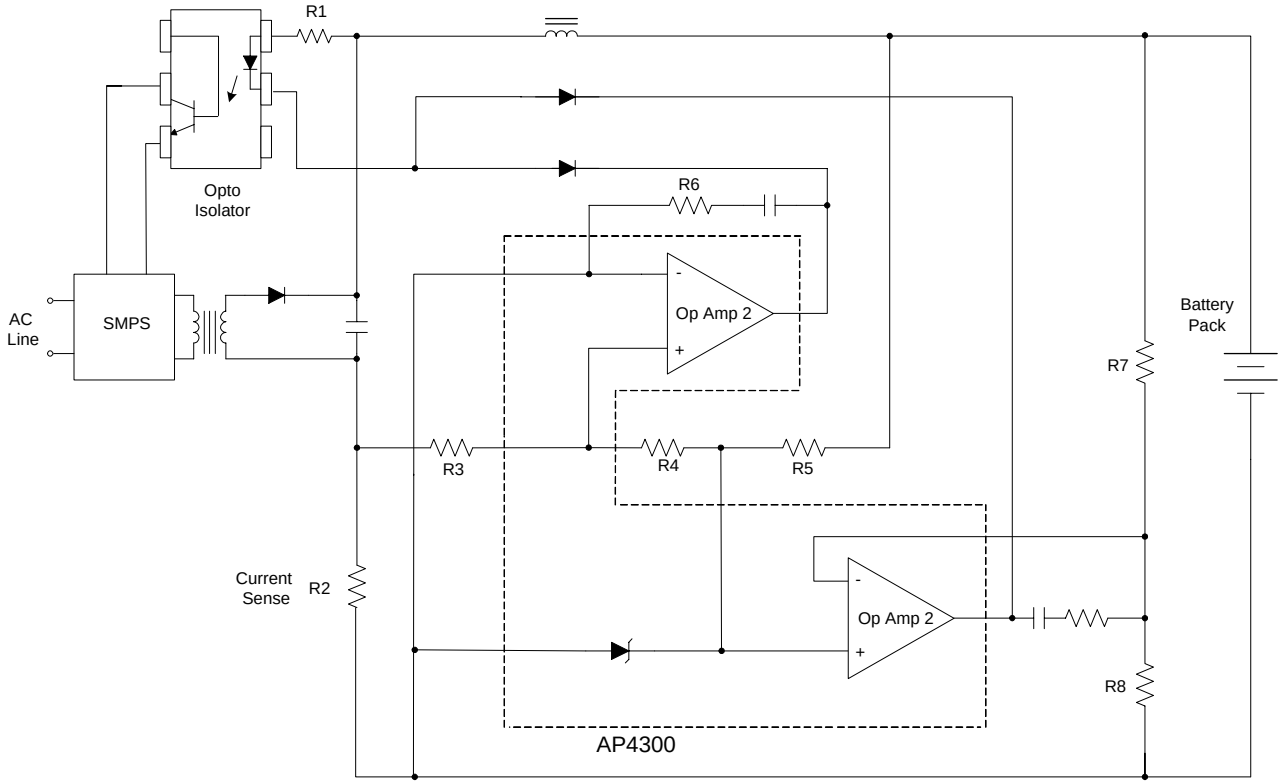

Figure 12. Application of AP4300 in a Constant Current and Constant Voltage Charger

Mechanical Dimensions

DIP-8 **Unit: mm(inch)**

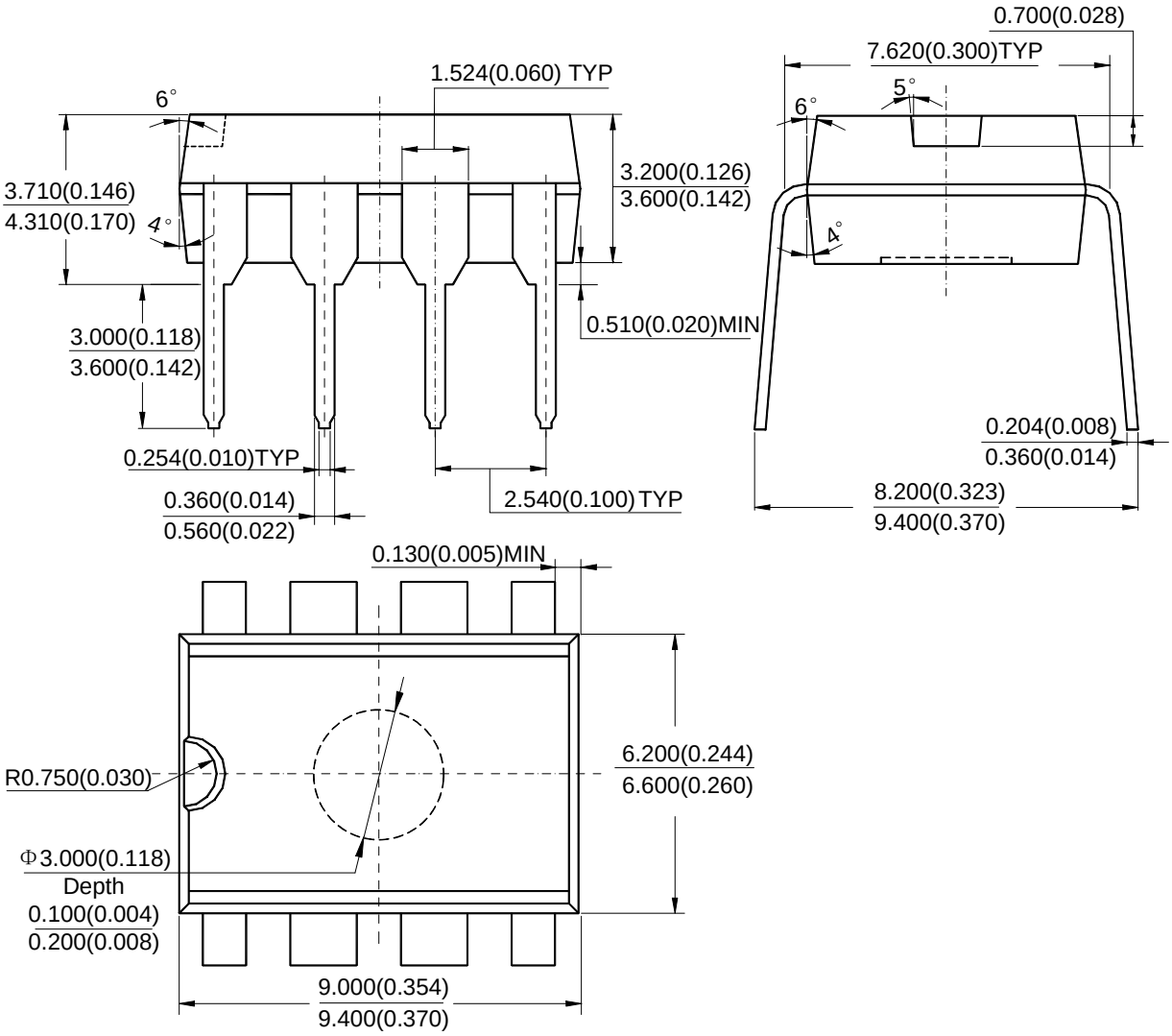

Mechanical Dimensions (Continued)

SOIC-8 **Unit: mm(inch)**

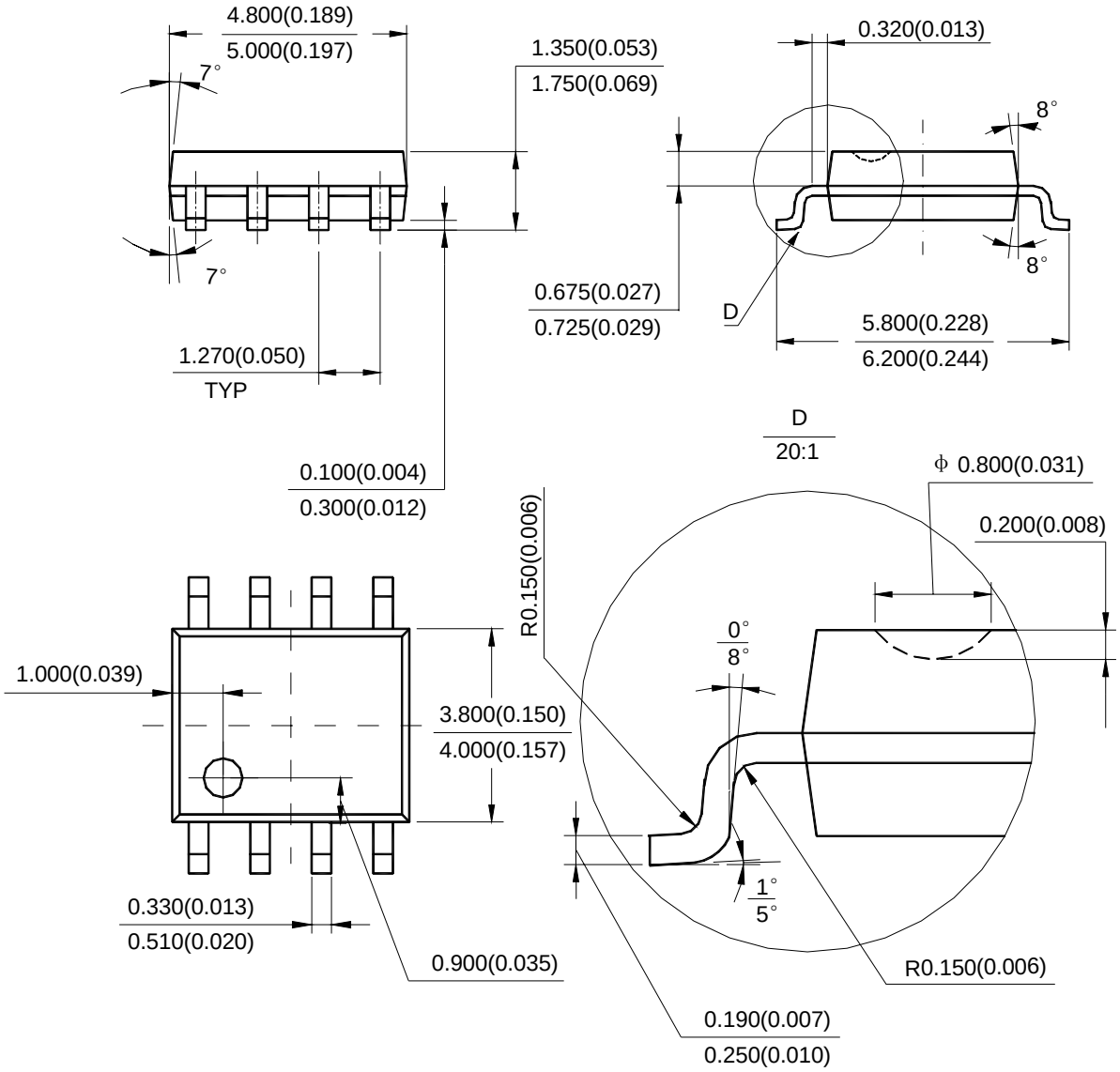

BCD Semiconductor Manufacturing Limited

http://www.bcdsemi.com

IMPORTANT NOTICE

BCD Semiconductor Manufacturing Limited reserves the right to make changes without further notice to any products or specifications herein. BCD Semiconductor Manufacturing Limited does not assume any responsibility for use of any its products for any particular purpose, nor does BCD Semiconductor Manufacturing Limited assume any liability arising out of the application or use of any its products or circuits. BCD Semiconductor Manufacturing Limited does not convey any license under its patent rights or other rights nor the rights of others.

MAIN SITE

BCD Semiconductor Manufacturing Limited
- Wafer Fab
Shanghai SIM-BCD Semiconductor Manufacturing Limited
800, Yi Shan Road, Shanghai 200233, China
Tel: +86-21-6485 1491, Fax: +86-21-5450 0008

BCD Semiconductor Manufacturing Limited
- IC Design Group
Advanced Analog Circuits (Shanghai) Corporation
8F, Zone B, 900, Yi Shan Road, Shanghai 200233, China
Tel: +86-21-6495 9539, Fax: +86-21-6485 9673

REGIONAL SALES OFFICE

Shenzhen Office
Shanghai SIM-BCD Semiconductor Manufacturing Co., Ltd. Shenzhen Office
Advanced Analog Circuits (Shanghai) Corporation Shenzhen Office
27B, Tower C, 2070, Middle Shen Nan Road, Shenzhen 518031, China
3368 3166

Taiwan Office
BCD Semiconductor (Taiwan) Company Limited
4F, 298-1, Rui Guang Road, Nei-Hu District, Taipei, Taiwan
Tel: +886-2-2656 2808, Fax: +886-2-2656 2806

USA Office
BCD Semiconductor Corporation
3170 De La Cruz Blvd., Suite 105, Santa Clara, CA 95054-2411, U.S.A
Tel: +1-408-988 6388, Fax: +1-408-988 6386