查询50N60供应商 捷多邦，专业PCB打样工厂，24小时加急出货

UNISONIC TECHNOLOGIES CO., LTD

50N06 **MOSFET**

50 Amps, 60 Volts
N-CHANNEL POWER MOSFET

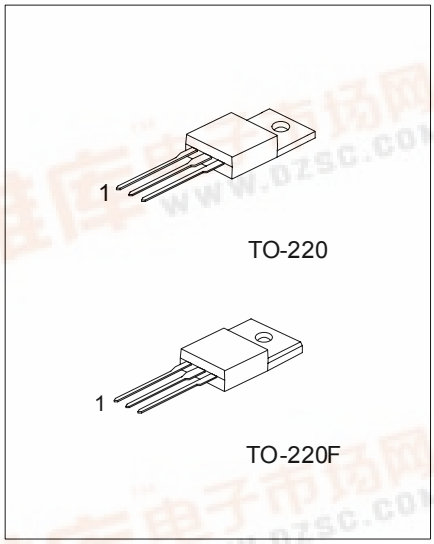

*Pb-free plating product number: 50N06L

■ DESCRIPTION

The UTC **50N06** is three-terminal silicon device with current conduction capability of about 50A, fast switching speed. Low on-state resistance, breakdown voltage rating of 60V, and max threshold voltages of 4 volt.

It is mainly suitable electronic ballast, and low power switching mode power appliances.

■ FEATURES

* $R_{DS(ON)}$ = 23mΩ@V_{GS} = 10 V
* Ultra low gate charge (typical 30 nC)
* Low reverse transfer Capacitance (C_{RSS} = typical 80 pF)
* Fast switching capability
* 100% avalanche energy specified
* Improved dv/dt capability

www.DataSheet4U.com

■ SYMBOL

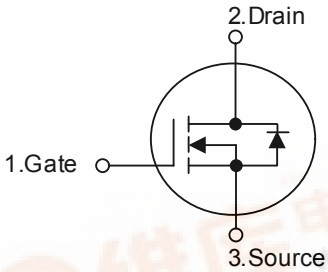

■ ORDERING INFORMATION

Order Number		Package	Pin Assignment			Packing
Normal	Lead Free Plating		1	2	3	
50N06-TA3-T	50N06L-x-TA3-T	TO-220	G	D	S	Tube
50N06-TF3-T	50N06L-x-TF3-T	TO-220F	G	D	S	Tube

50N06L-TA3-T (1)Packing Type (2)Package Type (3)Lead Plating	(1) T: Tube (2) TA3: TO-220, TF3: TO-220F (3) L: Lead Free Plating Blank: Pb/Sn

找PDF 维一下 pdf.dzsc.com

■ ABSOLUTE MAXIMUM RATINGS

PARAMETER		SYMBOL	RATINGS	UNIT
Drain-Source Voltage		V_{DSS}	60	V
Gate to Source Voltage		V_{GSS}	±20	V
Continuous Drain Current	T_C = 25℃	I_D	50	A
	T_C = 100℃		35	A
Drain Current Pulsed (Note 1)		I_{DM}	200	A
Single Pulsed Avalanche Energy (Note 2)		E_{AS}	480	mJ
Repetitive Avalanche Energy (Note 1)		E_{AR}	13	mJ
Peak Diode Recovery dv/dt (Note 3)		dv/dt	7	V/ns
Total Power Dissipation (T_C = 25℃)		P_D	130	W
Derating Factor above 25℃			0.9	W/℃
Operation Junction Temperature		T_J	-55 ~ +150	℃
Storage Temperature		T_{STG}	-55 ~ +150	℃

Note: Absolute maximum ratings are those values beyond which the device could be permanently damaged.
Absolute maximum ratings are stress ratings only and functional device operation is not implied.

■ THERMAL DATA

PARAMETER	SYMBOL	MIN	TYP	MAX	UNIT
Thermal Resistance, Junction-to-Case	θ_{JC}			1.15	°C/W
Thermal Resistance, Case-to-Sink	θ_{CS}		0.5		°C/W
Thermal Resistance, Junction-to-Ambient	θ_{JA}			62.5	°C/W

■ ELECTRICAL CHARACTERISTICS T_C = 25℃ unless otherwise specified

PARAMETER	SYMBOL	TEST CONDITIONS	MIN	TYP	MAX	UNIT
Off Characteristics						
Drain-Source Breakdown Voltage	BV_{DSS}	V_{GS} = 0 V, I_D = 250 μA	60			V
Breakdown Voltage Temperature Coefficient	$\triangle BV_{DSS}/\triangle T_J$	I_D = 250 μA, Referenced to 25℃		0.07		V/℃
Drain-Source Leakage Current	I_{DSS}	V_{DS} = 60 V, V_{GS} = 0 V			1	μA
		V_{DS} = 48 V, T_C = 125℃				μA
Gate-Source Leakage Current	I_{GSS}	V_{GS} = 20V, V_{DS} = 0 V			100	nA
Gate-Source Leakage Reverse		V_{GS} = -20V, V_{DS} = 0 V			-100	nA
On Characteristics						
Gate Threshold Voltage	$V_{GS(TH)}$	V_{DS} = V_{GS}, I_D = 250 μA	2.0		4.0	V
Static Drain-Source On-State Resistance	$R_{DS(ON)}$	V_{GS} = 10 V, I_D = 25 A		18	23	mΩ
Dynamic Characteristics						
Input Capacitance	C_{ISS}	V_{GS} = 0 V, V_{DS} = 25 V f = 1MHz		900	1220	pF
Output Capacitance	C_{OSS}			430	550	pF
Reverse Transfer Capacitance	C_{RSS}			80	100	pF
Dynamic Characteristics						
Turn-On Delay Time	$t_{D(ON)}$	V_{DD} = 30V, I_D =25 A, R_G = 50Ω (Note 4, 5)		40	60	ns
Rise Time	t_R			100	200	ns
Turn-Off Delay Time	$t_{D(OFF)}$			90	180	ns
Fall Time	t_F			80	160	ns
Total Gate Charge	Q_G	V_{DS} = 48V, V_{GS} = 10 V I_D = 50A, (Note 4, 5)		30	40	nC
Gate-Source Charge	Q_{GS}			9.6		nC
Gate-Drain Charge (Miller Charge)	Q_{GD}			10		nC

■ ELECTRICAL CHARACTERISTICS(Cont.)

PARAMETER	SYMBOL	TEST CONDITIONS	MIN	TYP	MAX	UNIT
Source-Drain Diode Ratings and Characteristics						
Diode Forward Voltage	V_{SD}	I_S = 50A, V_{GS} = 0 V			1.5	V
Continuous Source Current	I_S	Integral Reverse p-n Junction Diode in the MOSFET 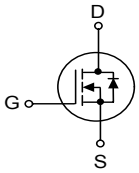			50	A
Pulsed Source Current	I_{SM}				200	
Reverse Recovery Time	t_{RR}	I_S = 50A, V_{GS} = 0 V		54		ns
Reverse Recovery Charge	Q_{RR}	dI_F / dt = 100 A/μs		81		μC

Note 1. Repeativity rating: pulse width limited by junction temperature
2. L=5.6mH, I_{AS}=50A, V_{DD}=25V, R_G=0Ω, Starting T_J=25℃
3. I_{SD}≤50A, di/dt≤300A/μs, V_{DD}≤BV_{DSS}, Starting T_J=25℃
4. Pulse Test: Pulse Width≤300μs,Duty Cycle≤2%
5. Essentially independent of operating temperature.

■ TEST CIRCUITS AND WAVEFORMS

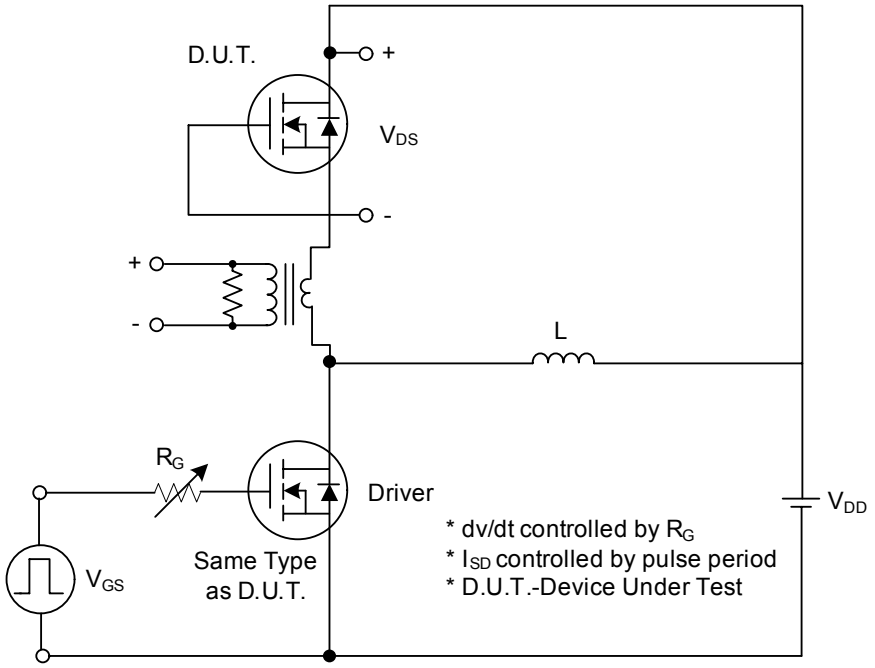

Fig. 1A Peak Diode Recovery dv/dt Test Circuit

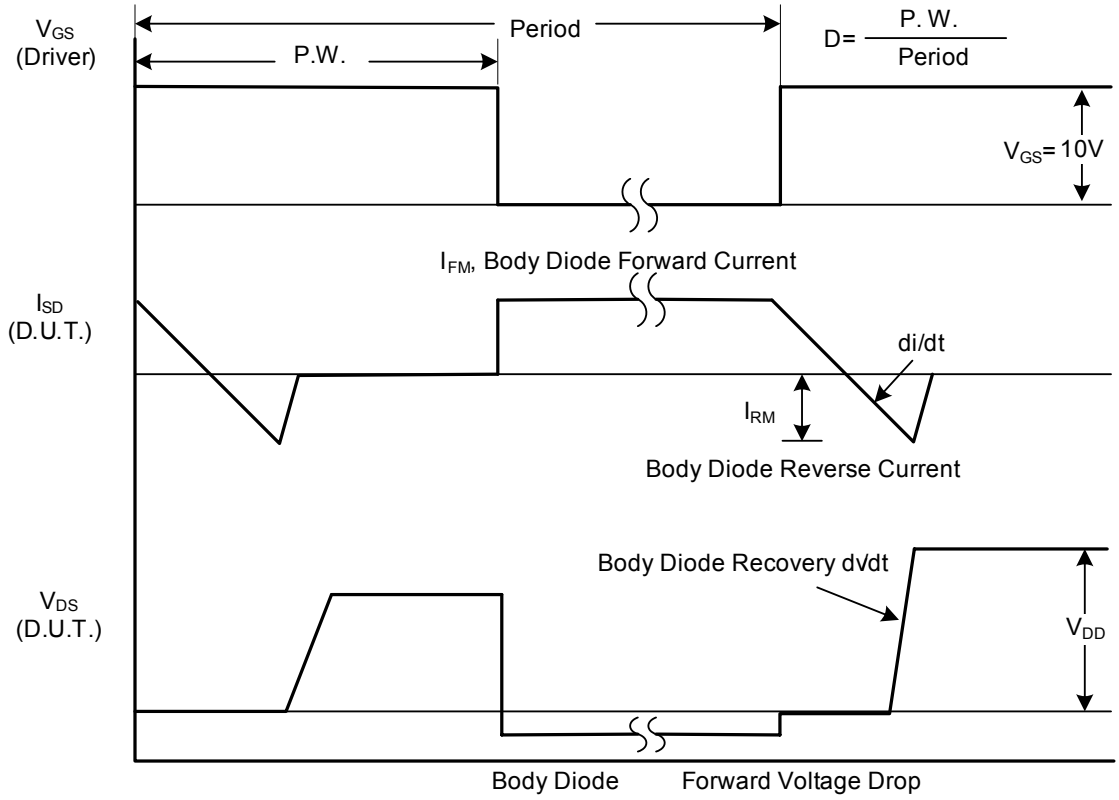

Fig. 1B Peak Diode Recovery dv/dt Waveforms

■ TEST CIRCUITS AND WAVEFORMS (Cont.)

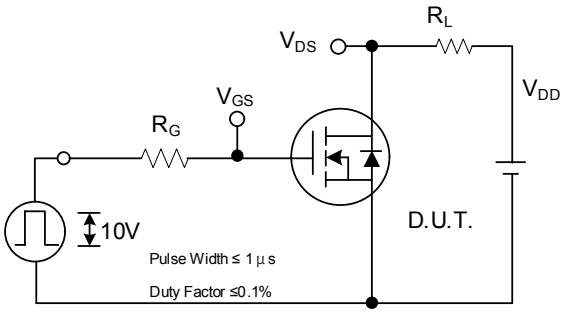

Fig. 2A Switching Test Circuit

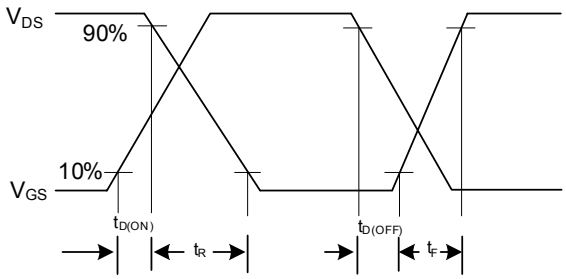

Fig. 2B Switching Waveforms

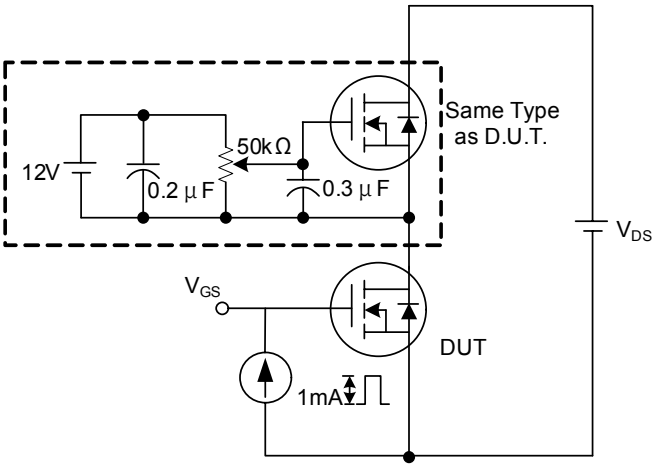

Fig. 3A Gate Charge Test Circuit

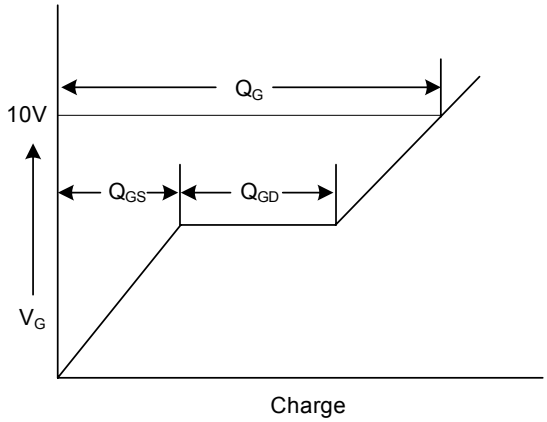

Fig. 3B Gate Charge Waveform

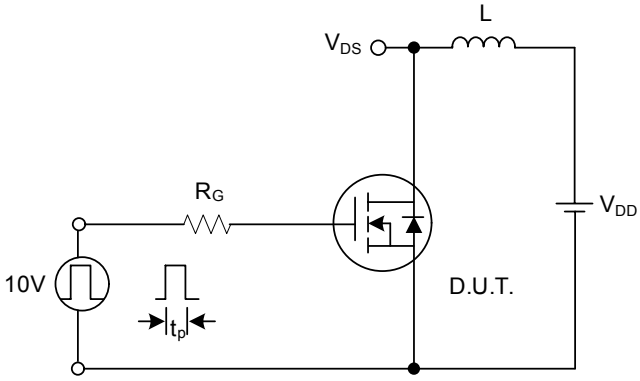

Fig. 4A Unclamped Inductive Switching Test Circuit

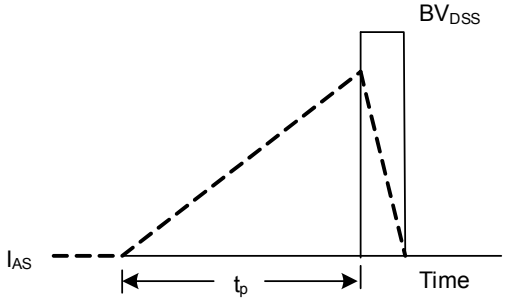

Fig. 4B Unclamped Inductive Switching Waveforms

■ TYPICAL CHARACTERISTICS

On-State Characteristics

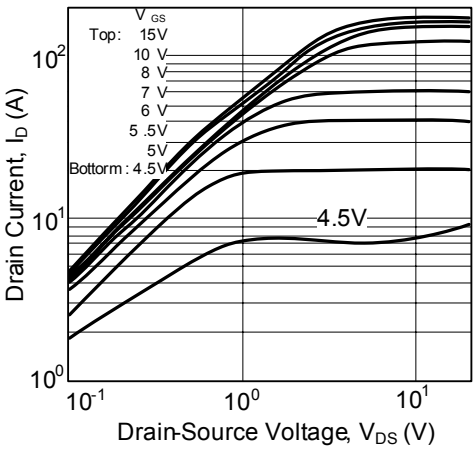

Transfer Characteristics

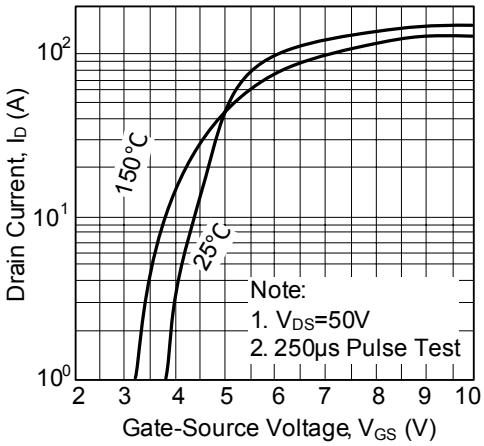

On-Resistance Variation vs Drain Current and Gate Voltage

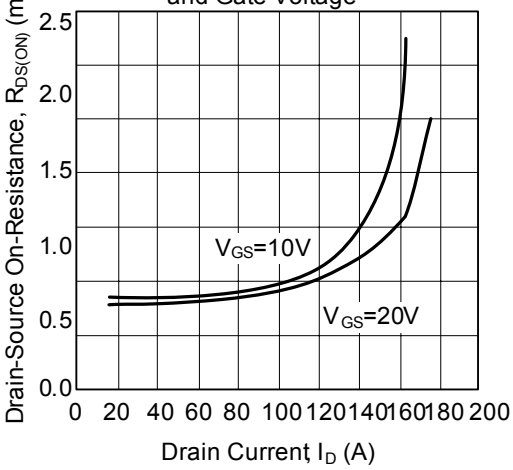

On State Current vs. Allowable Case Temperature

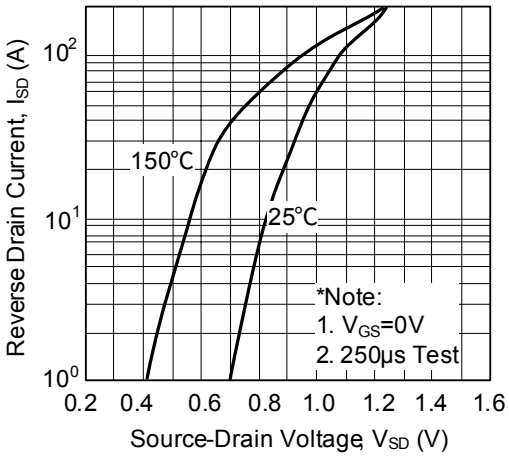

Capacitance Characteristics (Non-Repetitive)

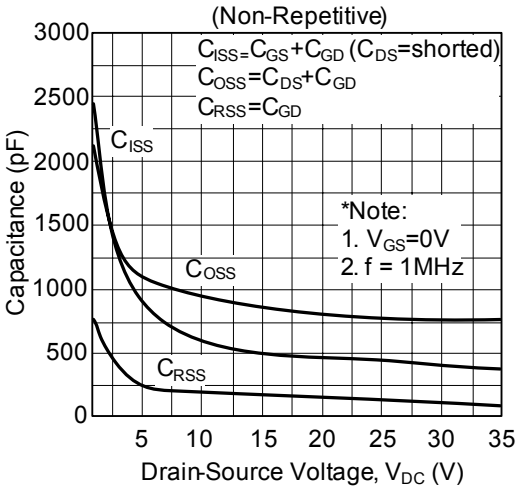

Gate Charge Characteristics

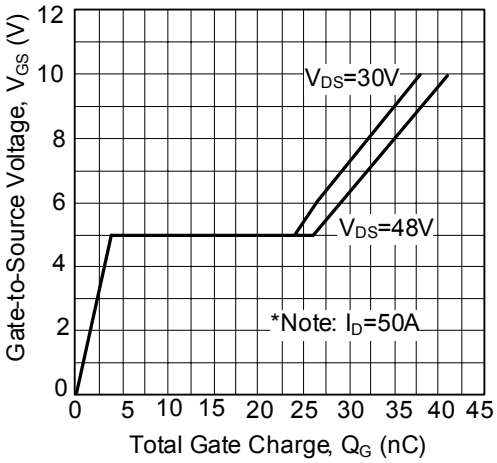

■ TYPICAL CHARACTERISTICS(Cont.)

Breakdown Voltage Variation vs Junction Temperature

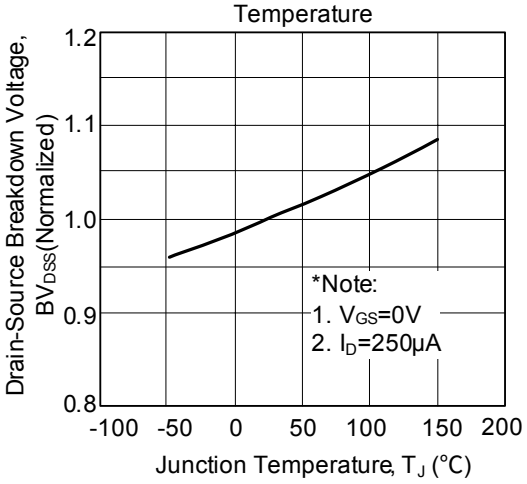

On-Resistance Variation vs Junction Temperature

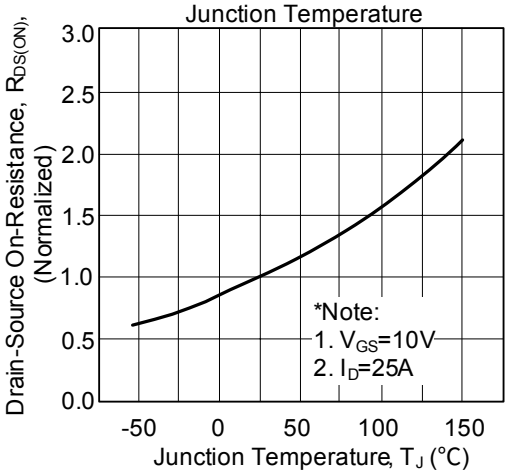

Maximum Safe Operating

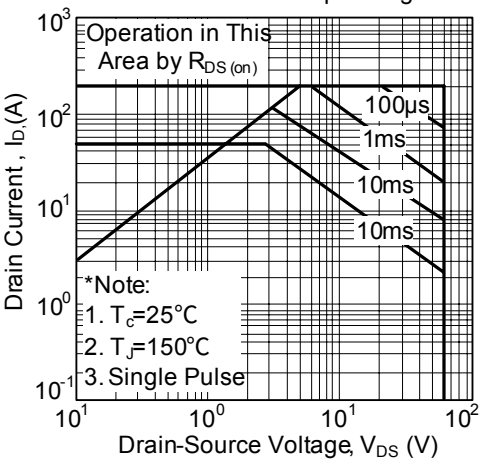

Maximum Drain Current vs. Case Temperature

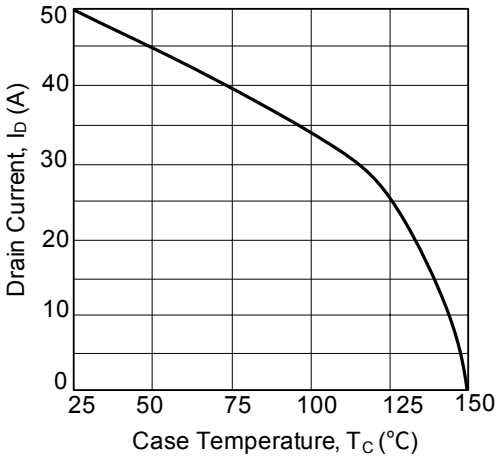

Transient Thermal Response Curve

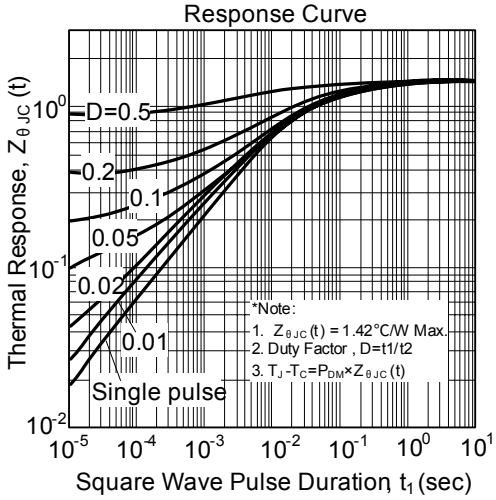

UTC assumes no responsibility for equipment failures that result from using products at values that exceed, even momentarily, rated values (such as maximum ratings, operating condition ranges, or other parameters) listed in products specifications of any and all UTC products described or contained herein. UTC products are not designed for use in life support appliances, devices or systems where malfunction of these products can be reasonably expected to result in personal injury. Reproduction in whole or in part is prohibited without the prior written consent of the copyright owner. The information presented in this document does not form part of any quotation or contract, is believed to be accurate and reliable and may be changed without notice.