查询GM2621供应商
www.DataSheet4U.com

GENESIS
DISPLAY PERFECTION

PRELIMINARY PRODUCT BRIEF

gm5621/gm5626/gm2621/gm2626

Dual Input LCD Controller for Entry Level Applications

APPLICATION

- Mainstream analog and dual-input XGA/SXGA LCD monitors

FEATURES

- Zoom (from VGA) and shrink (from UXGA) scaling
- Triple-channel (8-bit) ADC and PLL
- Ultra-Reliable DVI® receiver (165MHz) – DVI 1.0-compliant
- Dual channel RSDS transmitter and TCON (gm5626/2626 only)
- Dual channel LVDS transmitter
- Intel X86 compatible microcontroller with external SPI ROM interface
- Versatile OSD engine meets PC OEM specs
- All system clocks synthesized from a single external crystal
- Digital color controls and sRGB compliant
- 10-bit Panel gamma correction and high quality dithering for 8-bit and 6-bit panel interface
- DDC controller for host interface purposes
- Low bandwidth ADC for keypad interface and cable detection
- Two PWM signals for backlight and volume control
- Internal test pattern generator for factory test purposes
- Energy Spectrum Management® (ESM®)
- Instant Auto™ Image Adjustment

PACKAGE & POWER SUPPLY

- 3.3V IO and 1.8V CORE
- 128-pin PQFP

DESCRIPTION

Genesis gm5621 and gm5626 are all-in-one dual input LCD monitor controllers supporting resolutions up to SXGA, available in a very low pin count package. gm5621/5626 leverage Genesis patented advanced image-processing technology, as well as a proven integrated ADC/PLL and an Ultra-Reliable DVI® compliant digital receiver to deliver a high-quality solution for mainstream analog and dual input monitors. gm5621/5626 offer new Instant Auto™ technology, which provides fast and accurate image alignment for both static and moving images of the analog input signal. gm5621 includes an on-chip, industry standard, dual channel LVDS transmitter and a TCON, and gm5626 includes a dual channel RSDS transmitter for direct interfacing of commercially available LVDS/RSDS LCD panel modules. In addition, gm5621/5626 include an integrated X86 OCM with SPI compatible interface, a multicolor proportional font OSD engine, a programmable coefficient scaling engine, dual channel Schmitt and Reset circuitry. Along with the high quality and reliability, gm5621/5626 also provide a very low cost system design by reducing the number of components and the reduction in the board size.

gm2621/gm2626 are pin-compatible analog derivative products with integrated ADC/PLL, but no DVI receiver.

gm5621 SYSTEM DESIGN: CONVENTIONAL INTERFACE

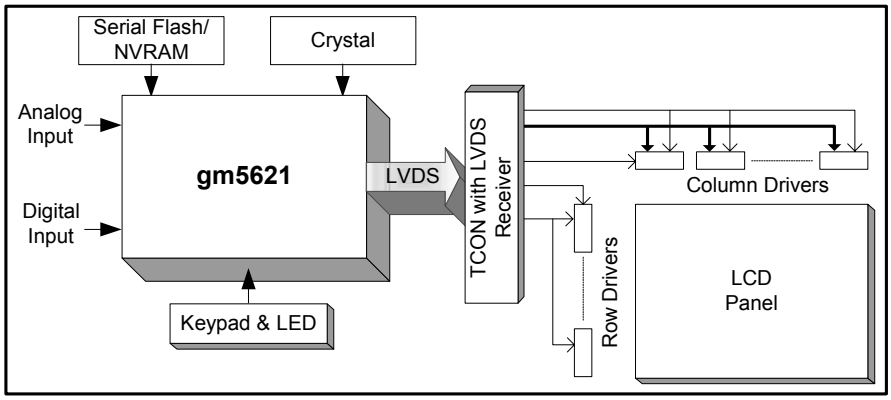

gm5626 SYSTEM DESIGN: ON-PANEL INTERFACE

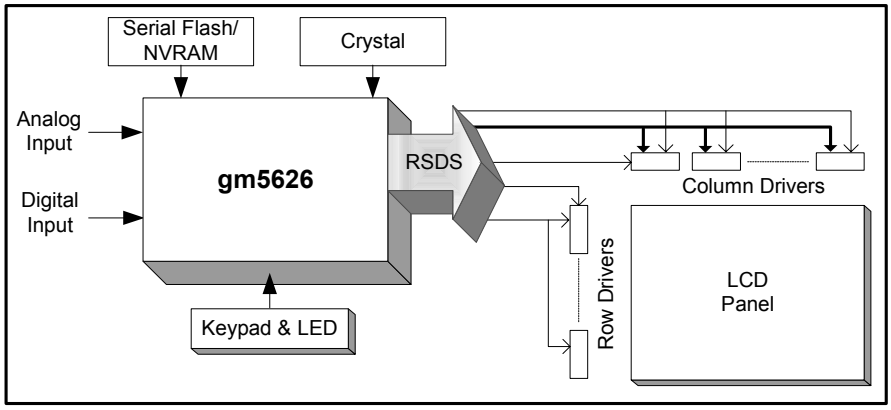

© 2004-2005 Genesis Microchip Inc.
www.DataSheet4U.com

www.DataSheet4U.com

gm5621/5626 FUNCTIONAL BLOCK DIAGRAM – LVDS OR RSDS TRANSMITTER

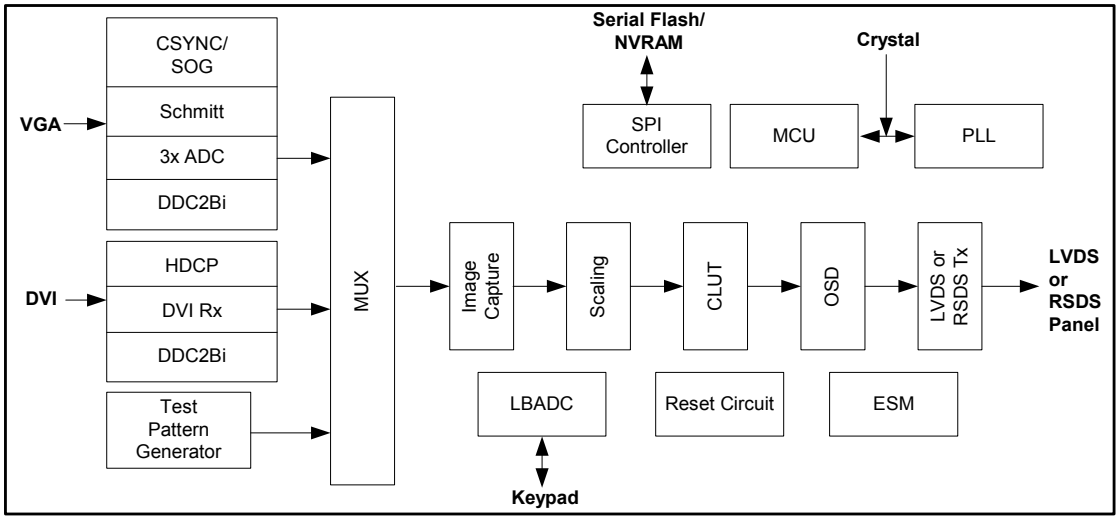

FEATURE DESCRIPTIONS

ANALOG RGB INPUT

- Supports up to SXGA 75Hz / UXGA 60Hz
- Composite-sync and Sync-on-Green (SOG) support
- Input format detection and auto-alignment
- Phase clock and image positioning

INSTANT AUTO™ IMAGE ADJUSTMENT

- Faster and more accurate than current conventional methods
- Auto-adjusts full width and partial width images
- Auto-adjusts DOS screens and moving images, such as screen savers and motion pictures

ULTRA-RELIABLE DVI® INPUT (gm5621/5626)

- Operating speed 165 MHz (up to UXGA 60Hz)
- Direct connect to all DVI-compliant digital transmitters
- High-bandwidth Digital Content Protection (HDCP)

INTELLIGENT IMAGE PROCESSING™

- Programmable coefficients for user sharpness control
- Real Recovery™ function provides full color recovery image for refresh rates higher than those supported by the LCD panel

ON-CHIP MICROCONTROLLER

- High-performance X86 MCU with on-chip RAM and ROM
- Unified memory architecture simplifies chip programming
- 5 general-purpose outputs (GPO)
- UART link for ISP and factory setting purpose
- Two DDC2Bi with DMA buffer to internal RAM
- Slow clock mode for 50mW sleep mode power consumption
- JTAG support for firmware debugging

ON-CHIP OSD CONTROLLER

- On-chip RAM for high-quality programmable menus
- 1, 2 and 4-bit per pixel character cells
- Horizontal and vertical stretch of OSD menus
- Blinking, transparency and blending
- Supports two independent OSD menu rectangles
- Proportional fonts

LVDS TRANSMITTERS

- Double pixel up to SXGA 75Hz output
- Support for 8 or 6-bit panels (with high-quality dithering)
- Pin swap, odd / even swap and red / blue group swap of RGB outputs for flexibility in board layout
- Programmable signal amplitude

RSDS TRANSMITTERS AND TCON (gm5626/2626)

- Dual channel 6-bit RSDS compliant serial interface with direct connect to RSDS compliant column drivers
- Support for type 1, type 2 and type 3 bus configuration
- Pin swap, odd / even swap and red / blue group swap of RGB outputs for flexibility in board layout
- Low EMI and power save feature include frame, line and in-line inversion and blanking

HIGHLY INTEGRATED SYSTEM-ON-A-CHIP

- 50mW power saving mode
- 5-Volt tolerant inputs
- Two Layer PCB support
- On-chip reset circuit to eliminate external reset IC
- Integrated Schmitt trigger for HSYNC and VSYNC
- General purpose low bandwidth ADC

© 2004-2005 Genesis Microchip Inc.
www.DataSheet4U.com