HOLTEK

HT73XX
Low Power Consumption LDO

Features

- Ultra low quiescent current: 4μA (typ.)
- High input voltage (up to 12V)
- Output voltage:
  1.8V, 2.5V, 2.7V, 3.0V, 3.3V, 3.5V, 5.0V
- Output voltage accuracy: tolerance ±3%
- Maximum output current: 250mA
- Low dropout voltage
- Low temperature coefficient
- TO-92, SOT-89 package

Applications

- Battery-powered equipment
- Voltage regulator for microprocessor
- Voltage regulator for LAN cards
- Wireless Communication equipment
- Audio/Video equipment

General Description

The HT73XX series is a set of three-terminal, low power, high voltage regulators implemented in CMOS technology. The series features extremely low quiescent current which is typically 4μA. They allow input voltages as high as 12V. The device provides large current with a significantly small dropout voltage.

The HT73XX consists of a high-precision voltage reference, an error correction circuit, and a current limited output driver. They are available with several fixed output voltages ranging from 1.8V to 5.0V. CMOS technology ensures low dropout voltage and low current consumption. Although designed primarily as fixed voltage regulators, these devices can be used with external components to generate variable voltages and currents.

Selection Table

Part No.	Output Voltage	Tolerance	Package	Marking
HT7318	1.8V	±3%	TO-92-A TO-92-B SOT-89-A	73XX-A (for TO-92-A) 73XX-B (for TO-92-B) 73XX-A (for SOT-89)
HT7325	2.5V	±3%		
HT7327	2.7V	±3%		
HT7330	3.0V	±3%		
HT7333	3.3V	±3%		
HT7335	3.5V	±3%		
HT7350	5.0V	±3%		

Note: "XX" stands for output voltages

Block Diagram

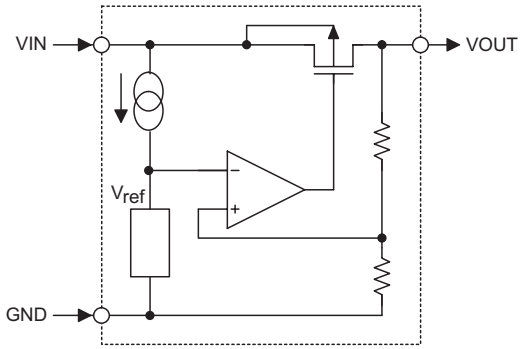

Pin Assignment

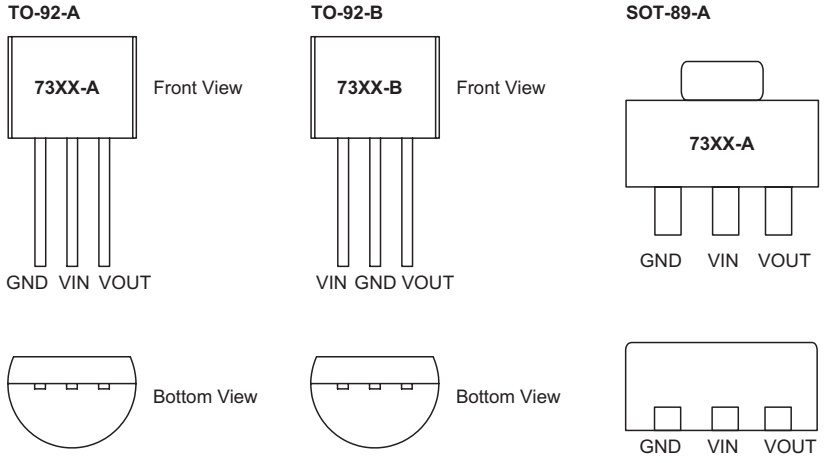

Absolute Maximum Ratings

Supply Voltage .....V_{SS}–0.3V to V_{SS}+14V

Power Consumption (*1) 500mW

Power Consumption (*2) 500mW

Storage Temperature .....–50°C to 125°C

Operating Temperature .....–40°C to 85°C

Note: These are stress ratings only. Stresses exceeding the range specified under "Absolute Maximum Ratings" may cause substantial damage to the device. Functional operation of this device at other conditions beyond those listed in the specification is not implied and prolonged exposure to extreme conditions may affect device reliability.
*1: applied to TO-92
*2: applied to SOT-89

Electrical Characteristics

HT7318, +1.8V Output Type Ta=25°C

Symbol	Parameter	Test Conditions		Min.	Typ.	Max.	Unit
		V_{IN}	Conditions				
V_{OUT}	Output Voltage	2.8V	I_{OUT}=40mA	1.746	1.8	1.854	V
$I_{OUT(MAX)}$	Maximum Output Current	2.8V	V_{OUT}≥1.62V	150	—	—	mA
ΔV_{OUT}*	Load Regulator	2.8V	1mA≤I_{OUT}≤80mA	—	45	90	mV
V_{DROP}**	Dropout Voltage	—	I_{OUT}=40mA	—	300	—	mV
I_{SS}	Quiescent Current	2.8V	No load	—	4	8	μA
$\frac{\Delta V_{OUT}}{\Delta V_{IN} \times V_{OUT}}$	Line Regulator	—	I_{OUT}=40mA 2.8V≤V_{IN}≤12V	—	0.2	0.3	%/V
V_{IN}	Input Voltage	—	—	—	—	12	V
$\frac{\Delta V_{OUT}}{\Delta T_a}$	Temperature Coefficient	2.8V	I_{OUT}=40mA −40°C<Ta<85°C	—	±0.7	—	ppm/°C

HT7325, +2.5V Output Type Ta=25°C

Symbol	Parameter	Test Conditions		Min.	Typ.	Max.	Unit
		V_{IN}	Conditions				
V_{OUT}	Output Voltage	3.5V	I_{OUT}=40mA	2.425	2.5	2.575	V
$I_{OUT(MAX)}$	Maximum Output Current	3.5V	V_{OUT}≥2.25V	180	—	—	mA
ΔV_{OUT}*	Load Regulator	3.5V	1mA≤I_{OUT}≤80mA	—	45	90	mV
V_{DROP}**	Dropout Voltage	—	I_{OUT}=40mA	—	230	—	mV
I_{SS}	Quiescent Current	3.5V	No load	—	4	8	μA
$\frac{\Delta V_{OUT}}{\Delta V_{IN} \times V_{OUT}}$	Line Regulator	—	I_{OUT}=40mA 3.5V≤V_{IN}≤12V	—	0.2	0.3	%/V
V_{IN}	Input Voltage	—	—	—	—	12	V
$\frac{\Delta V_{OUT}}{\Delta T_a}$	Temperature Coefficient	3.5V	I_{OUT}=40mA −40°C<Ta<85°C	—	±0.7	—	ppm/°C

HT7327, +2.7V Output Type Ta=25°C

Symbol	Parameter	Test Conditions		Min.	Typ.	Max.	Unit
		V_{IN}	Conditions				
V_{OUT}	Output Voltage	3.7V	I_{OUT}=40mA	2.619	2.7	2.781	V
$I_{OUT(MAX)}$	Maximum Output Current	3.7V	V_{OUT}≥2.43V	200	—	—	mA
ΔV_{OUT}*	Load Regulator	3.7V	1mA≤I_{OUT}≤100mA	—	45	90	mV
V_{DROP}**	Dropout Voltage	—	I_{OUT}=40mA	—	190	—	mV
I_{SS}	Quiescent Current	3.7V	No load	—	4	8	μA
$\frac{\Delta V_{OUT}}{\Delta V_{IN} \times V_{OUT}}$	Line Regulator	—	I_{OUT}=40mA 3.7V≤V_{IN}≤12V	—	0.2	0.3	%/V
V_{IN}	Input Voltage	—	—	—	—	12	V
$\frac{\Delta V_{OUT}}{\Delta T_a}$	Temperature Coefficient	3.7V	I_{OUT}=40mA −40°C<Ta<85°C	—	±0.7	—	ppm/°C

HT7330, +3.0V Output Type Ta=25°C

Symbol	Parameter	Test Conditions		Min.	Typ.	Max.	Unit
		V_{IN}	Conditions				
V_{OUT}	Output Voltage	4V	I_{OUT}=40mA	2.91	3	3.09	V
$I_{OUT(MAX)}$	Maximum Output Current	4V	V_{OUT}≥2.7V	250	—	—	mA
ΔV_{OUT}*	Load Regulator	4V	1mA≤I_{OUT}≤100mA	—	45	90	mV
V_{DROP}**	Dropout Voltage	—	I_{OUT}=40mA	—	160	—	mV
I_{SS}	Quiescent Current	4V	No load	—	4	8	μA
$\frac{\Delta V_{OUT}}{\Delta V_{IN} \times V_{OUT}}$	Line Regulator	—	I_{OUT}=40mA 4V≤V_{IN}≤12V	—	0.2	0.3	%/V
V_{IN}	Input Voltage	—	—	—	—	12	V
$\frac{\Delta V_{OUT}}{\Delta T_a}$	Temperature Coefficient	4V	I_{OUT}=40mA −40°C<Ta<85°C	—	±0.7	—	ppm/°C

HT7333, +3.3V Output Type Ta=25°C

Symbol	Parameter	Test Conditions		Min.	Typ.	Max.	Unit
		V_{IN}	Conditions				
V_{OUT}	Output Voltage	4.3V	I_{OUT}=40mA	3.201	3.3	3.399	V
$I_{OUT(MAX)}$	Maximum Output Current	4.3V	V_{OUT}≥2.97V	250	—	—	mA
ΔV_{OUT}*	Load Regulator	4.3V	1mA≤I_{OUT}≤100mA	—	45	90	mV
V_{DROP}**	Dropout Voltage	—	I_{OUT}=40mA	—	150	—	mV
I_{SS}	Quiescent Current	4.3V	No load	—	4	8	μA
$\frac{\Delta V_{OUT}}{\Delta V_{IN} \times V_{OUT}}$	Line Regulator	—	I_{OUT}=40mA 4.3V≤V_{IN}≤12V	—	0.2	0.3	%/V
V_{IN}	Input Voltage	—	—	—	—	12	V
$\frac{\Delta V_{OUT}}{\Delta T_a}$	Temperature Coefficient	4.3V	I_{OUT}=40mA −40°C<Ta<85°C	—	±0.7	—	ppm/°C

HT7335, +3.5V Output Type Ta=25°C

Symbol	Parameter	Test Conditions		Min.	Typ.	Max.	Unit
		V_{IN}	Conditions				
V_{OUT}	Output Voltage	4.5V	I_{OUT}=40mA	3.395	3.5	3.605	V
$I_{OUT(MAX)}$	Maximum Output Current	4.5V	V_{OUT}≥3.15V	250	—	—	mA
ΔV_{OUT}*	Load Regulator	4.5V	1mA≤I_{OUT}≤100mA	—	45	90	mV
V_{DROP}**	Dropout Voltage	—	I_{OUT}=40mA	—	140	—	mV
I_{SS}	Quiescent Current	4.5V	No load	—	4	8	μA
$\frac{\Delta V_{OUT}}{\Delta V_{IN} \times V_{OUT}}$	Line Regulator	—	I_{OUT}=40mA 4.5V≤V_{IN}≤12V	—	0.2	0.3	%/V
V_{IN}	Input Voltage	—	—	—	—	12	V
$\frac{\Delta V_{OUT}}{\Delta T_a}$	Temperature Coefficient	4.5V	I_{OUT}=80mA −40°C<Ta<85°C	—	±0.7	—	ppm/°C

HT7350, +5.0V Output Type Ta=25°C

Symbol	Parameter	Test Conditions		Min.	Typ.	Max.	Unit
		V_{IN}	Conditions				
V_{OUT}	Output Voltage	6V	I_{OUT}=40mA	4.85	5	5.15	V
$I_{OUT(MAX)}$	Maximum Output Current	6V	V_{OUT}≥4.5V	250	—	—	mA
ΔV_{OUT}*	Load Regulator	6V	1mA≤I_{OUT}≤100mA	—	45	90	mV
V_{DROP}**	Dropout Voltage	—	I_{OUT}=40mA	—	100	—	mV
I_{SS}	Quiescent Current	6V	No load	—	4	8	μA
$\frac{\Delta V_{OUT}}{\Delta V_{IN} \times V_{OUT}}$	Line Regulator	—	I_{OUT}=40mA 6V≤V_{IN}≤12V	—	0.2	0.3	%/V
V_{IN}	Input Voltage	—	—	—	—	12	V
$\frac{\Delta V_{OUT}}{\Delta T_a}$	Temperature Coefficient	6V	I_{OUT}=80mA −40°C<Ta<85°C	—	±0.7	—	ppm/°C

Note: "*" Regulation is measured at constant junction temperature, using pulsed ON time.

"**" Dropout is measured at constant junction temperature, using pulsed ON time, and the criterion is V_{OUT} inside target value ±2%.

Application Circuits

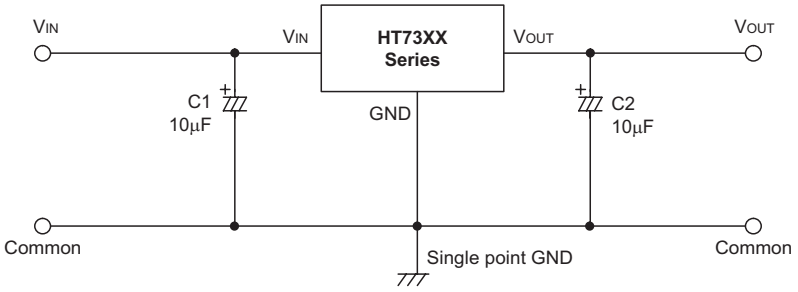

Package Information

3-pin TO-92 Outline Dimensions

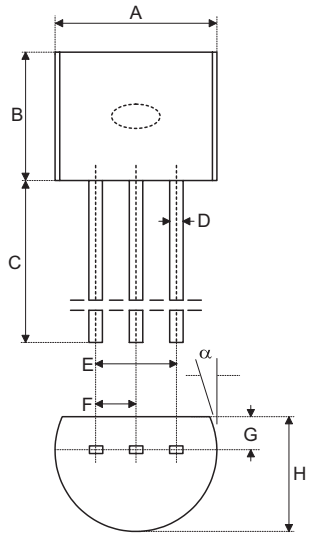

Symbol	Dimensions in mil		
	Min.	Nom.	Max.
A	170	—	200
B	170	—	200
C	500	—	—
D	11	—	20
E	90	—	110
F	45	—	55
G	45	—	65
H	130	—	160
I	8	—	18
α	4°	—	6°

3-pin SOT-89 Outline Dimensions

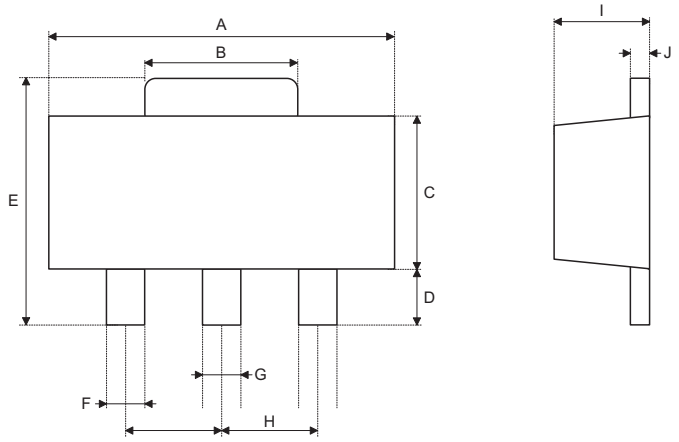

Symbol	Dimensions in mil		
	Min.	Nom.	Max.
A	173	—	181
B	64	—	72
C	90	—	102
D	35	—	47
E	155	—	167
F	14	—	19
G	17	—	22
H	—	59	—
I	55	—	63
J	14	—	17

Product Tape and Reel Specifications

TO-92 Reel Dimensions (Unit: mm)

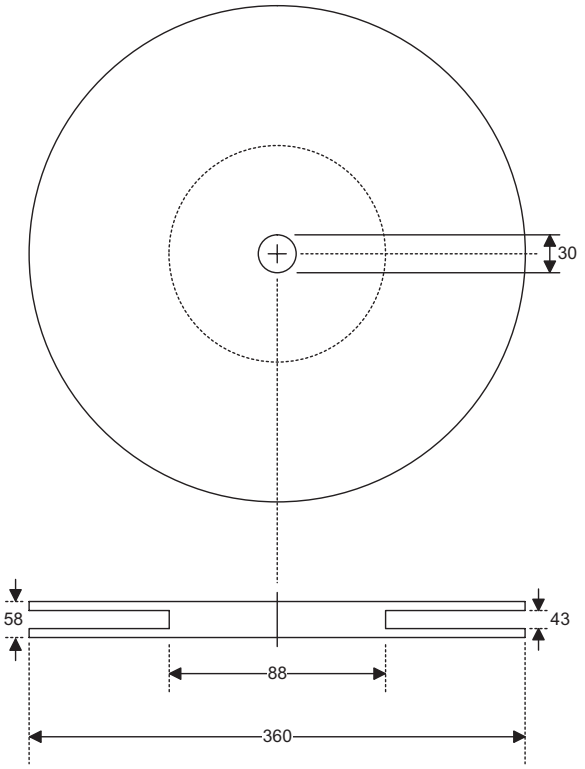

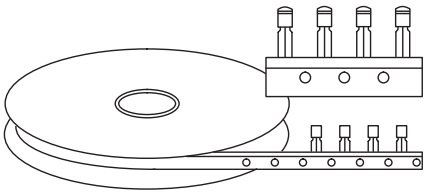

Package Up, Flat Side Up

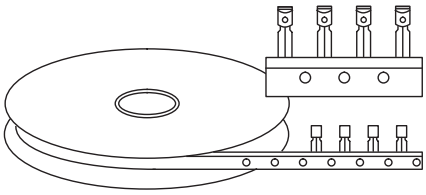

Package Up, Flat Side Down

SOT-89 Reel Dimensions

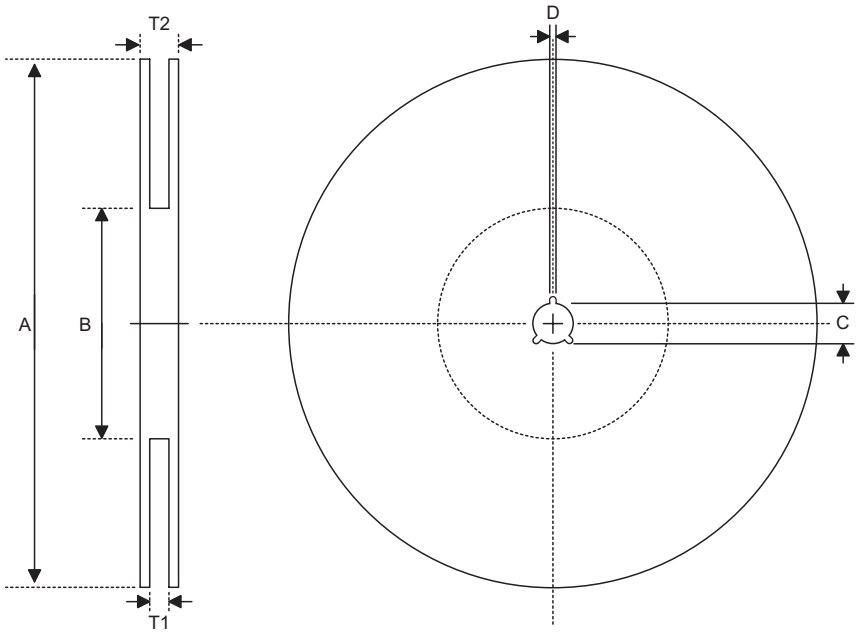

SOT-89

Symbol	Description	Dimensions in mm
A	Reel Outer Diameter	180±1.0
B	Reel Inner Diameter	62±1.5
C	Spindle Hole Diameter	12.75+0.15
D	Key Slit Width	1.9±0.15
T1	Space Between Flange	12.4+0.2
T2	Reel Thickness	17−0.4

TO-92 Carrier Tape Dimensions

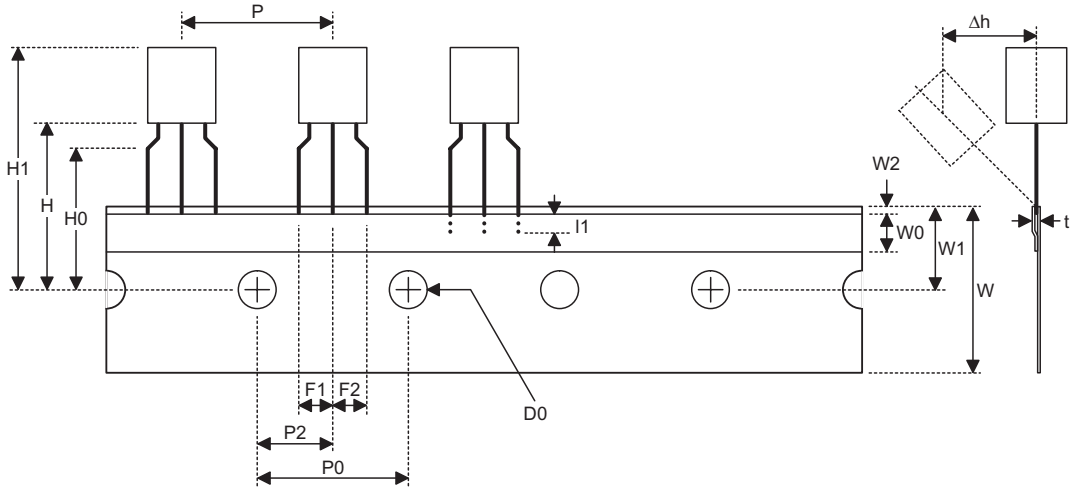

TO-92

Symbol	Description	Dimensions in mm
I1	Taped Lead Length	(2.5)
P	Component Pitch	12.7±1.0
P_0	Perforation Pitch	12.7±0.3
P_2	Component to Perforation (Length Direction)	6.35±0.4
F_1	Lead Spread	2.5+0.4 −0.1
F_2	Lead Spread	2.5+0.4 −0.1
Δh	Component Alignment	0±0.1
W	Carrier Tape Width	18.0+1.0 −0.5
W_0	Hold-down Tape Width	6.0±0.5
W_1	Perforation Position	9.0±0.5
W_2	Hold-down Tape Position	(0.5)
H_0	Lead Clinch Height	16.0±0.5
H_1	Component Height	Less than 24.7
D_0	Perforation Diameter	4.0±0.2
t	Taped Lead Thickness	0.7±0.2
H	Component Base Height	19.0±0.5

Note: Thickness less than 0.38±0.05mm~0.5mm

P0 Accumulated pitch tolerance: ±1mm/20pitches.

( ) Bracketed figures are for consultation only

SOT-89 Carrier Tape Dimensions

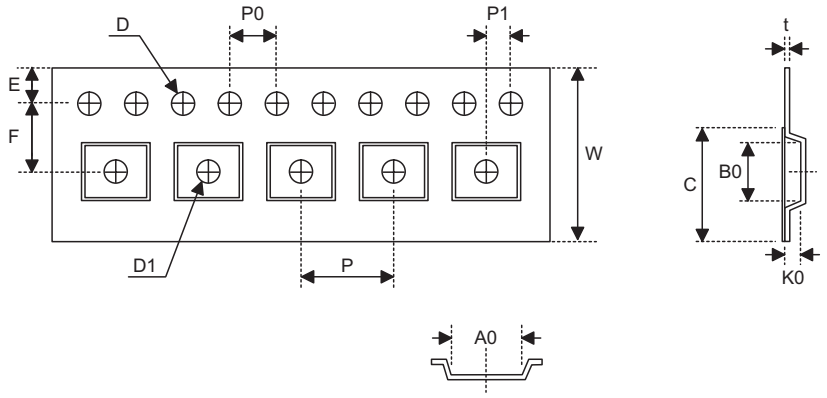

SOT-89

Symbol	Description	Dimensions in mm
W	Carrier Tape Width	12.0+0.3 −0.1
P	Cavity Pitch	8.0±0.1
E	Perforation Position	1.75±0.1
F	Cavity to Perforation (Width Direction)	5.5±0.05
D	Perforation Diameter	1.5+0.1
D1	Cavity Hole Diameter	1.5+0.1
P0	Perforation Pitch	4.0±0.1
P1	Cavity to Perforation (Length Direction)	2.0±0.10
A0	Cavity Length	4.8±0.1
B0	Cavity Width	4.5±0.1
K0	Cavity Depth	1.8±0.1
t	Carrier Tape Thickness	0.30±0.013
C	Cover Tape Width	9.3

Holtek Semiconductor Inc. (Headquarters)
No.3, Creation Rd. II, Science Park, Hsinchu, Taiwan
Tel: 886-3-563-1999
Fax: 886-3-563-1189
http://www.holtek.com.tw

Holtek Semiconductor Inc. (Taipei Sales Office)
4F-2, No. 3-2, YuanQu St., Nankang Software Park, Taipei 115, Taiwan
Tel: 886-2-2655-7070
Fax: 886-2-2655-7373
Fax: 886-2-2655-7383 (International sales hotline)

Holtek Semiconductor Inc. (Shanghai Sales Office)
7th Floor, Building 2, No.889, Yi Shan Rd., Shanghai, China 200233
Tel: 021-6485-5560
Fax: 021-6485-0313
http://www.holtek.com.cn

Holtek Semiconductor Inc. (Shenzhen Sales Office)
43F, SEG Plaza, Shen Nan Zhong Road, Shenzhen, China 518031
Tel: 0755-8346-5589
Fax: 0755-8346-5590
ISDN: 0755-8346-5591

Holtek Semiconductor Inc. (Beijing Sales Office)
Suite 1721, Jinyu Tower, A129 West Xuan Wu Men Street, Xicheng District, Beijing, China 100031
Tel: 010-6641-0030, 6641-7751, 6641-7752
Fax: 010-6641-0125

Holmate Semiconductor, Inc. (North America Sales Office)
46712 Fremont Blvd., Fremont, CA 94538
Tel: 510-252-9880
Fax: 510-252-9885
http://www.holmate.com