查询TPS61042供应商 捷多邦，专业PCB打样工厂，24小时加急出货

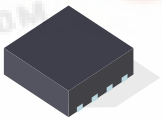

CONSTANT CURRENT LED DRIVER

FEATURES

- Current Source With Overvoltage Protection
- Input Voltage Range . . 1.8 V to 6.0 V
- Internal 30 V Switch
- Up to 85% Efficiency
- Precise Brightness Control Using PWM Signal or Analog Signal
- Switching Frequency . . Up to 1 MHz
- Internal Power MOSFET Switch . . 500 mA
- Operates With Small Output Capacitors Down to 100 nF
- Disconnects LEDs During Shutdown
- No Load Quiescent Current . . 38 µA Typ
- Shutdown Current . . 0.1 µA Typ
- Available in a Small 3 mm × 3 mm QFN Package

DESCRIPTION

The TPS61042 is a high frequency boost converter with constant current output that drives white LEDs or similar. The LED current is set with the external sense resistor (R_S) and is directly regulated by the feedback pin (FB) that regulates the voltage across the sense resistor R_S to 252 mV (typ). To control LED brightness, the LED current can be pulsed by applying a PWM (pulse width modulated) signal with a frequency range of 100 Hz to 50 kHz to the control pin (CTRL). To allow higher flexibility, the device can be configured where the brightness can be controlled by an analog signal as well, as described in the *application information* section. To avoid possible leakage currents through the LEDs during shutdown, the control pin (CTRL) disables the device and disconnects the LEDs from ground. For maximum safety during operation, the output has integrated overvoltage protection that prevents damage to the device in case of a high impedance output (e.g. faulty LED).

APPLICATIONS

- White LED Supply for Backlight/Sidelight Displays
  - PDA, Pocket PC, Smart Phones
  - Handheld Devices
  - Cellular Phones

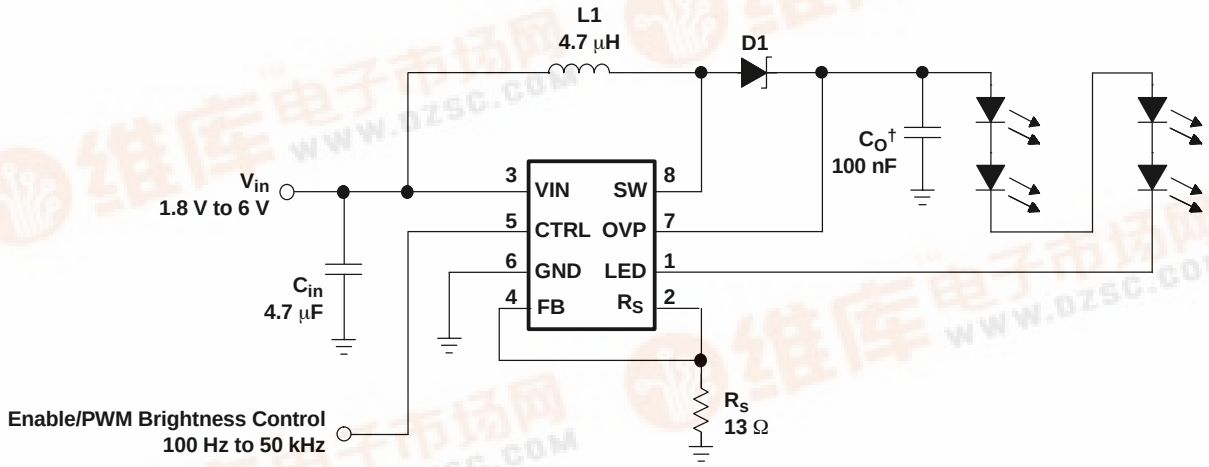

† Larger output capacitor values like 1 µF and larger, reduce the LED ripple current and improve line regulation.

Figure 1. Typical Application

Please be aware that an important notice concerning availability, standard warranty, and use in critical applications of Texas Instruments semiconductor products and disclaimers thereto appears at the end of this data sheet.

PRODUCTION DATA information is current as of publication date. Products conform to specifications per the terms of Texas Instruments standard warranty.

Copyright © 2003, Texas Instruments Incorporated

ORDERING INFORMATION (1)

T_A	Package	Package Marking
-40 to 85°C	TPS61042DRB	BHS

(1) The DRB package is available taped and reeled. Add R suffix (TPS61042DRBR) to order quantities of 3000 devices per reel. Add T suffix (TPS61042DRBT) to order quantities of 250 devices per reel.

ABSOLUTE MAXIMUM RATINGS

over operating free-air temperature range (unless otherwise noted) (1)

	TPS61042
Supply Voltages, $v_{(VIN)}$ (2)	-0.3 V to 7 V
Voltages, $V_{(Rs)}$, $V_{(CTRL)}$, $V_{(FB)}$	-0.3 V to Vin + 0.3 V
Voltages, $V_{(SW)}$, $V_{(LED)}$ (2)	30 V
Voltage, $V_{(OVP)}$	30 V
Continuous power dissipation	See Dissipation Rating Table
Operating junction temperature range	-40°C to 150°C
Storage temperature range, T_{STG}	-65°C to 150°C
Lead temperature (soldering, 10 sec)	260°C

(1) Stresses beyond those listed under *absolute maximum ratings* may cause permanent damage to the device. These are stress ratings only, and functional operation of the device at these or any other conditions beyond those indicated *under recommended operating conditions* is not implied. Exposure to absolute-maximum-rated conditions for extended periods may affect device reliability.
(2) All voltage values are with respect to network ground terminal.

DISSIPATION RATING

PACKAGE	$T_A \leq 25°C$ POWER RATING	DERATING FACTOR ABOVE T_A=25°C	T_A=70°C POWER RATING	T_A=85°C POWER RATING
8 pin QFN (1)	370 mW	3.7 mW/°C	204 mW	148 mW

(1) The thermal resistance junction to ambient of the 8-pin QFN package is 270 °C/W. Standard 2-layer PCB without vias for the thermal pad. See the application section on how to improve the thermal resistance $R_{\theta JA}$.

RECOMMENDED OPERATING CONDITIONS

		MIN	TYP	MAX	UNIT
V_I	Input voltage range	1.8		6.0	V
V_s	Output voltage range	V_{IN}		27.5	V
V_{SW}	Switch voltage			30	V
$I_{(LED)}$	Maximum LED switch current			60	mA
L	Inductor (1)		4.7		µH
f	Switching frequency (1)			1	MHz
C_I	Input capacitor (1)		4.7		µF
C_O	Output capacitor (1)		100		nF
T_A	Operating ambient temperature	-40		85	°C
T_J	Operating junction temperature	-40		125	°C

(1) See application section for further information

ELECTRICAL CHARACTERISTICS

V_I = 3.6 V, CTRL= V_I, T_A = -40°C to + 85°C, typical values are at T_A= 25°C (unless otherwise noted)

PARAMETER		TEST CONDITIONS	MIN	TYP	MAX	UNIT
Supply current						
V_I	Input voltage range		1.8		6.0	V
$I_{(Q)}$	Operating quiescent current into VIN	I_O =0 mA, not switching		38	65	µA
$I_{O(sd)}$	Shutdown current	CTRL=GND		0.1	1	µA
V_{UVLO}	Under-voltage lockout threshold	V_I falling		1.5	1.7	V
CTRL						
V_{IH}	CTRL high level input voltage		1.3			V
V_{IL}	CTRL low level input voltage				0.3	V
I_{lkg}	CTRL input leakage current	CTRL=GND or VIN			0.1	µA
t_{on}	Minimim CTRL pulse witdh to enable	CTRL=low to high	500			us
t_{off}	Minimum CTRL pulse width to disable	CTRL=high to low	10		32	ms
$f_{(CTRL)}$	PWM switching frequency applied to CTRL		0.1		50	kHz
$D_{(CTRL)}$	PWM duty cycle applied to CTRL		1		100	%
Power switch and current limit (SW)						
V_S	Maximum switch voltage				30	V
$r_{ds(ON)}$	MOSFET on-resistance	V_I=3.6 V; $I_{(SW)}$=200 mA		300	600	mΩ
I_{lkg}	MOSFET leakage current	$V_{(SW)}$=28 V		0.1	10	µA
I_{LIM}	MOFSET current limit		400	500	600	mA
LED switch and current limit (LED)						
V_S	Maximum switch voltage				30	V
$r_{ds(ON)}$	MOSFET on-resistance	V_I=3.6 V; I_S =20 mA		1	2	Ω
I_{lkg}	MOSFET leakage current	$V_{(LED)}$=28 V		0.1	10	µA
Output						
V_O	Output voltage range		V_I		27.5	V
$I_{(FB)}$	Feedback input bias current (1)	$V_{(FB)}$ =0.252 V			100	nA
V_{FB}	Feedback trip point voltage	1.8 V ≤ V_I≤ 6.0 V	244	252	260	mV
$V_{(OVP)}$	Output overvoltage protection	V_O rising	27.5	29	30	V
$V_{hys(OVP)}$	Output overvoltage protection hysteresis		5		7	V
$I_{(OVP)}$	OVP input current	V_O=15 V		9	12	µA

(1) The feedback input is high impedance MOSFET Gate input.

DRB PACKAGE
(TOP VIEW)

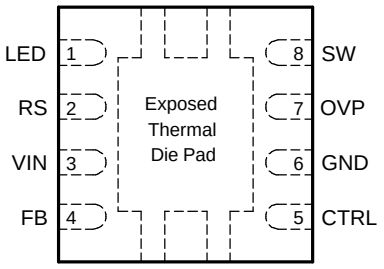

NOTES:The exposed thermal die pad is connected to GND.

Terminal Functions

TERMINAL NAME	NO.	I/O	DESCRIPTION
CTRL	5	I	Combined enable and PWM control pin. If CTRL is constantly pulled high, the device is enabled and the internal LED switch (Q2) is constantly turned on. When CTRL is pulled to GND, the device is disabled. Apply a PWM signal (100 Hz to 50 kHz) to this pin to control the brightness of the LEDs
FB	4	I	Feedback. FB regulates the LED current through the sense resistor by regulating the voltage across R_S to 252 mV.
GND	6		GND
LED	1	I	Input of the LED switch (Q2). Connect the LEDs to this pin.
OVP	7	I	Overvoltage protection. OVP is connected to the output capacitor of the converter.
RS	2	O	Output of the internal LED switch. The sense resistor that programs the LED current is connected to RS.
SW	8	I	Drain of the integrated switch (Q1)
VIN	3	I	Input supply pin.

FUNCTIONAL BLOCK DIAGRAM

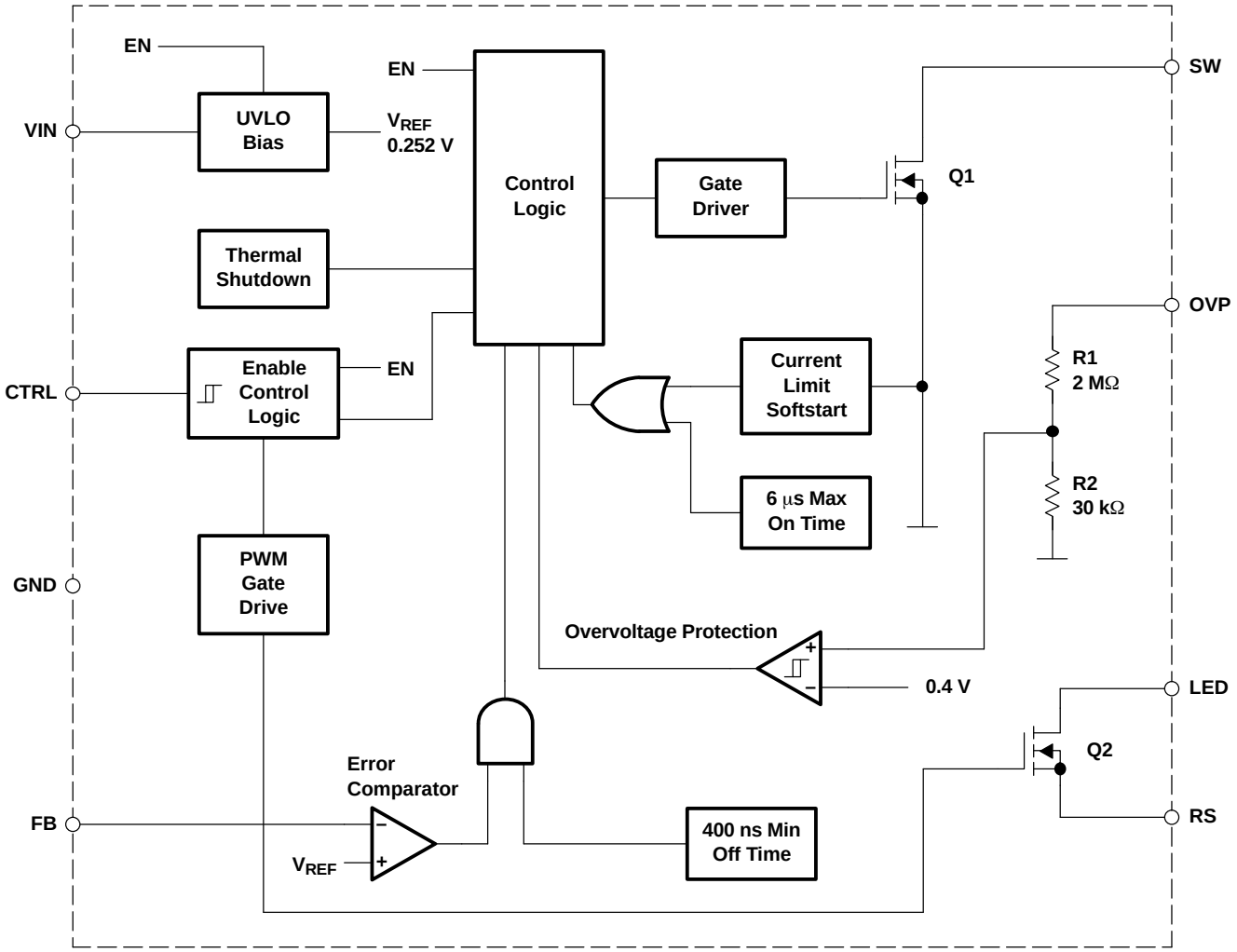

TYPICAL CHARACTERISTICS

TABLE OF GRAPHS

			FIGURE
η	Efficiency	vs LED current	Figure 2
		vs Input voltage	Figure 3
I_Q	Operating Quiescent Current into VIN	vs Input voltage and Temperature	Figure 4
$V_{(FB)}$	Feedback voltage	vs Temperature	Figure 5
$I_{(FB)}$	Feedback current	vs Temperature	Figure 6
$r_{ds(on)}$	Main switch Q1	vs Temperature	Figure 7
		vs Input voltage	Figure 8
	LED switch Q2	vs Temperature	Figure 9
		vs Input voltage	Figure 10
I_{LED}	Average LED current	vs PWM duty cycle on CTRL pin	Figure 11
	Soft start		Figure 12
	PFM operation (fixed peak current control)		Figure 13
	Burst mode operation (fixed peak current control)		Figure 14
	PWM dimming		Figure 15

Efficiency vs LED Current

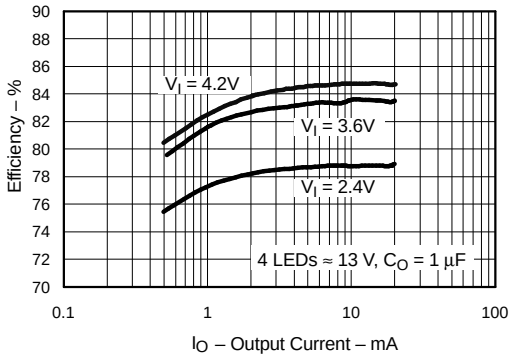

Figure 2

Efficiency vs Input Voltage

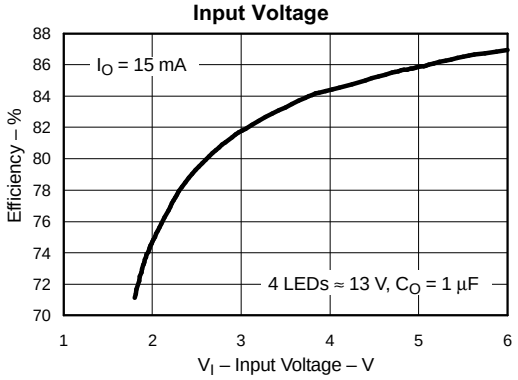

Figure 3

Operating Quiescent Current into VIN vs Input Voltage and Temperature

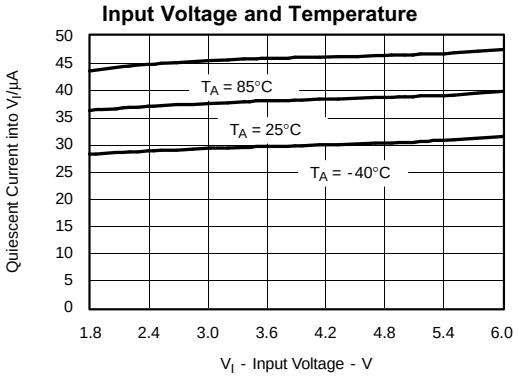

Figure 4

Feedback Voltage vs Temperature

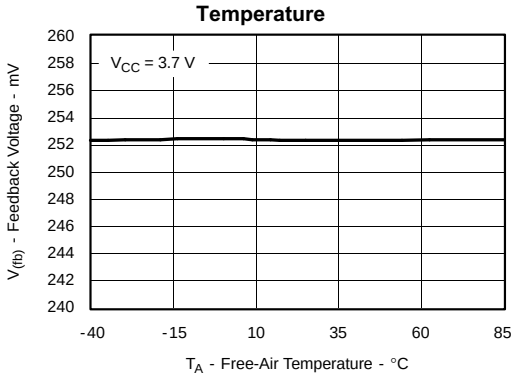

Figure 5

Feedback Current vs Temperature

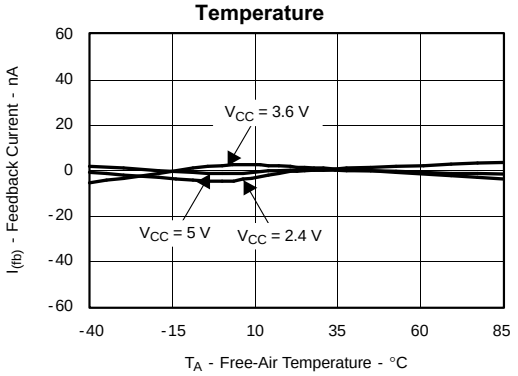

Figure 6

$r_{ds(on)}$ Main Switch (Q1) vs Temperature

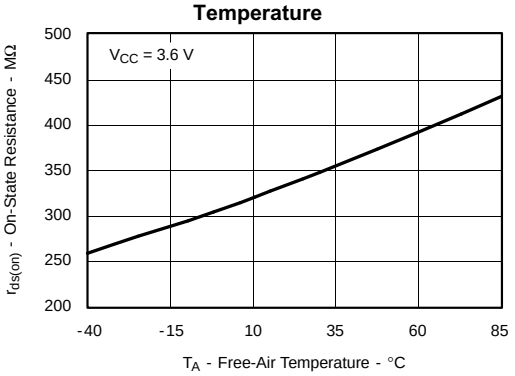

Figure 7

$r_{ds(ON)}$ Main Switch (Q1) vs Input Voltage

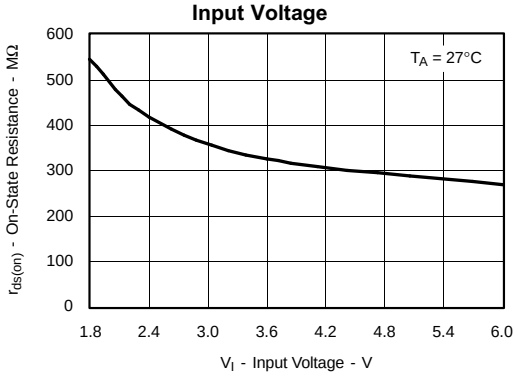

Figure 8

$r_{ds(on)}$ LED Switch (Q2) vs Temperature

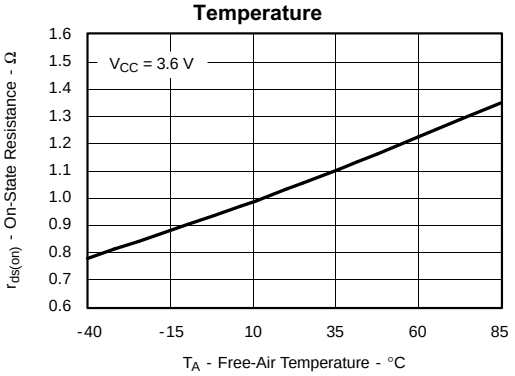

Figure 9

$r_{ds(on)}$ LED Switch (Q2) vs Input Voltage

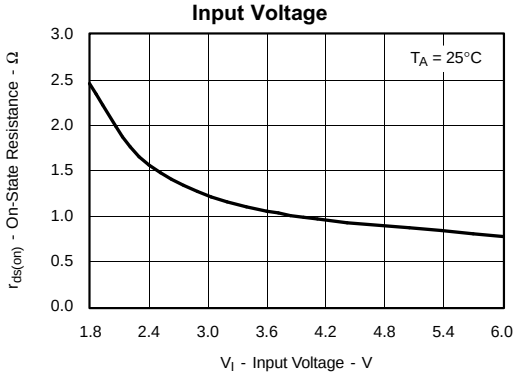

Figure 10

Average LED Current vs PWM Duty Cycle on CTRL Pin

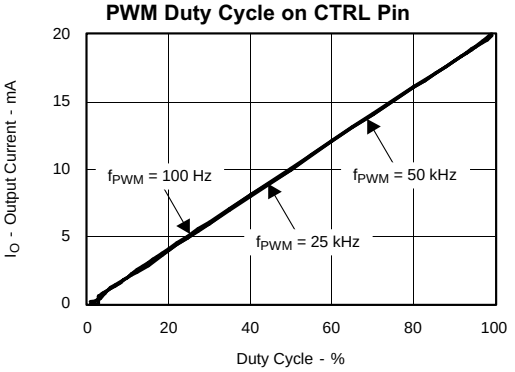

Figure 11

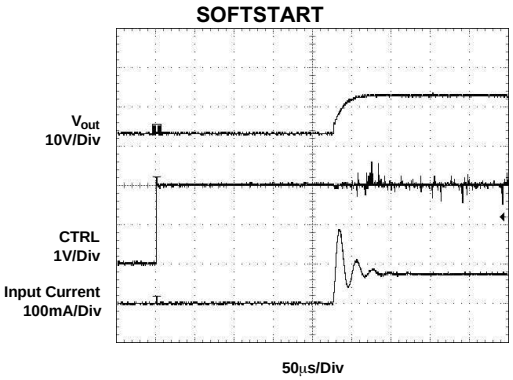

Figure 12

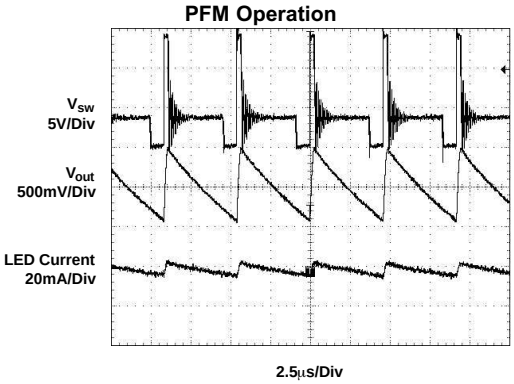

Figure 13

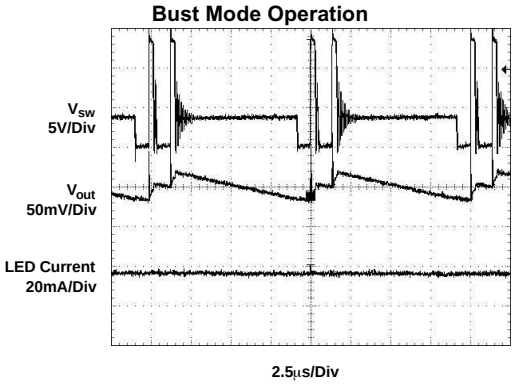

Figure 14

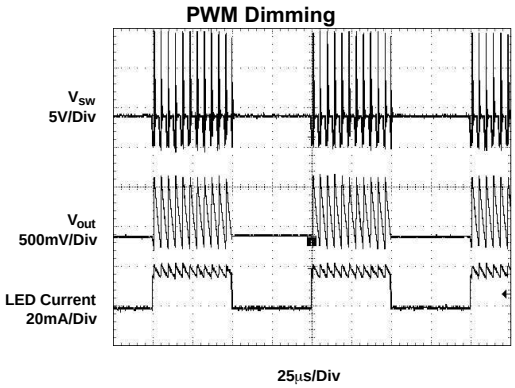

Figure 15

DETAILED DESCRIPTION

OPERATION

The TPS61042 operates like a standard boost converter but regulates the voltage across the sense resistor (R_S) instead of the output voltage. This gives an accurate regulated LED current independent of the input voltage and number of LEDs connected. With integrated overvoltage protection (OVP) the TPS61042 is configured as a current source with overvoltage protection ideally suited to drive LEDs. With the 30V internal switch, the device can generate output voltages of up to 27.5 V and has an internal 500mA MOSFET switch (Q1). This allows several LEDs to be connected in series to the output. The internal LED switch (Q2) in series with the LEDs has a maximum current rating of 60 mA and disconnects the LEDs from ground during shutdown. The LED switch is driven by a PWM signal applied to the control pin (CTRL), which directly controls the LED brightness. With this control method the LED brightness depends on the PWM duty cycle only and is independent of the PWM frequency and amplitude.

BOOST CONVERTER

The boost converter operates in a pulse frequency modulation (PFM) scheme with constant peak current control. This control scheme maintains high efficiency over the entire load current range and with a switching frequency of up to 1 MHz, enables the use of small external components. The converter monitors the sense voltage across R_S with the feedback pin (FB) and, when the feedback voltage falls below the reference voltage (252 mV typ), the main switch turns on and the current ramps up. The main switch turns off when the inductor current reaches the internally set peak current of 500 mA (typ). Refer to the *peak current control* section for more information. The second criteria that turns off the main switch is the maximum on-time of 6 µs (typ). This limits the maximum on-time of the converter in extreme conditions. As the switch is turned off the external Schottky diode is forward biased, delivering the stored inductor energy to the output. The main switch remains off until the minimum off time of 400 ns (typ) has passed and the feedback voltage is below the reference voltage again. Using this PFM peak current control scheme, the converter operates in discontinuous conduction mode (DCM) where the switching frequency depends on the inductor, input and output voltage, and LED current. Lower LED currents reduce the switching frequency, which results in high efficiency over the entire LED current range. This regulation scheme is inherently stable, allowing a wide range for the selection of the inductor and output capacitor.

PEAK CURRENT CONTROL (BOOST CONVERTER)

The internal switch is turned on until the inductor current reaches the DC current limit (I_{LIM}) of 500 mA (typ) . Due to the internal current limit delay of 100 ns (typ) the actual current exceeds the DC current limit threshold by a small amount. The typical peak current limit can be calculated:

$$I_{P(typ)} = I_{(LIM)} + \frac{V_I}{L} \times 100\ \text{ns}$$

$$I_{P(typ)} = 500\ \text{mA} + \frac{V_I}{L} \times 100\ \text{ns}$$

The higher the input voltage and the lower the inductor value, the greater the current limit overshoot.

SOFTSTART

All inductive step-up converters exhibit high in-rush current during start-up if no special precautions are taken. This can cause voltage drops at the input rail during start-up, which may result in an unwanted or premature system shutdown.

The TPS61042 limits this in-rush current during start-up by increasing the current limit in two steps starting from $I_{LIM}/4$ for 256 switch cycles to $I_{LIM}/2$ for the next 256 switch cycles and then full current limit. See Figure 12 for typical start-up behavior.

CONTROL (CTRL)

The CTRL pin serves two functions. One is the enable and disable of the device. The other is the PWM control of the internal LED switch (Q2). If no PWM signal is applied to the CTRL pin, then the CTRL pin can be used as a standard enable pin for the device. To enable the device, the CTRL pin must be pulled high for time period of at least 500 µs. The device starts with the softstart cycle. Pulling the CTRL pin to GND for a time period ≥32 ms disables the device, disconnecting the LEDs from GND by opening the LED switch (Q2) to avoid any LED leakage current. See Figure 16 for the CTRL pin timing.

The internal LED switch (Q2) is driven by the PWM signal when applied to the CTRL pin. Applying a PWM signal in the range of 100 Hz to 50 kHz allows the LED current to be pulsed with the duty cycle of the PWM signal. The CTRL pin accepts a PWM duty cycle from D = 1% to 100%. Duty cycles below 1% are also possible with the restriction that the device is forced into shutdown as the off time of the applied PWM signal exceeds 10 ms.

When a PWM signal is applied to the CTRL pin the LED switch (Q2) turns on immediately. The internal error comparator is disabled for 400 ns. This 400 ns delay time is required to establish the correct voltage level across the sense resistor R_S after the LED switch (Q2) is closed.

To achieve good LED current accuracy and linearity, the switching frequency of the converter must be higher than the PWM frequency applied to the CTRL pin.

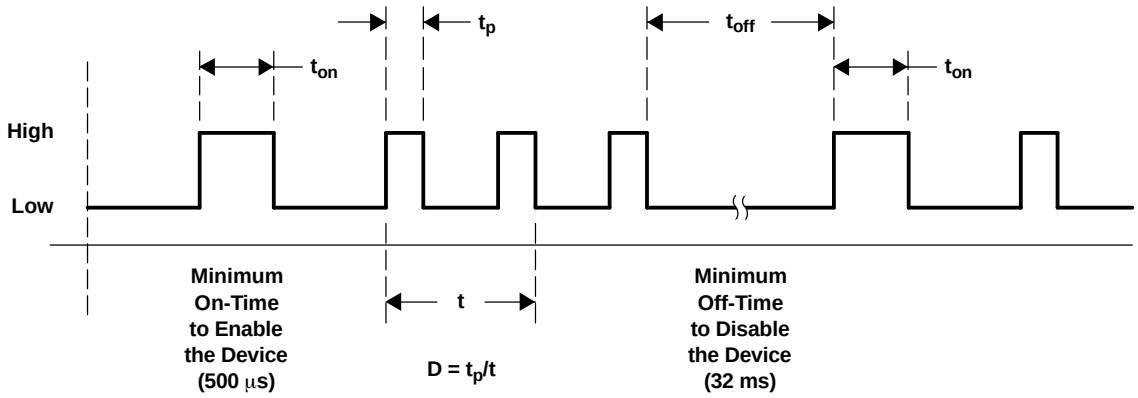

Figure 16. CTRL Timing Diagram

The CTRL timing diagram is shown in Figure 16. To enable the device, the CTRL signal must be high for 500 µs. The PWM signal can then be applied with a pulse width (t_p) greater or smaller than t_{ON}. To force the device into shutdown mode, the CTRL signal must be low for at least 32 ms. Requiring the CTRL pin to be low for 32mS before the device enters shutdown allows for PWM dimming frequencies as low as 100 Hz. The device is enabled again when a CTRL signal is high for a period of 500 µs minimum. See Figure 11 for the PWM duty cycle versus LED current characteristic.

This CTRL pin must be terminated.

OVERVOLTAGE PROTECTION (OVP)

As with any current source, the output voltage rises as the output impedance increases or is disconnected. To prevent the output voltage from exceeding the maximum main switch (Q1) voltage rating of 30 V, an overvoltage protection circuit is integrated. When the output voltage exceeds the OVP threshold voltage, (Q1) turns off. The converter switch remains off until the output voltage falls below the OVP threshold voltage. As long as the output voltage is below the OVP threshold the converter continues its normal operation, until the output voltage exceeds the OVP threshold again.

UNDERVOLTAGE LOCKOUT

An undervoltage lockout feature prevents mis-operation of the device at input voltages below 1.5 V (typ). As long as the input voltage is below the undervoltage threshold the device remains off, with the main MOSFET switch (Q1) and the LED switch (Q2) open.

THERMAL SHUTDOWN

An internal thermal shutdown is implemented in the TPS61042 that shuts down the device if the typical junction temperature of 160°C is exceeded. If the device is in thermal shutdown mode, the main MOSFET switch (Q1) and the LED switch (Q2) are open.

APPLICATION INFORMATION

INDUCTOR SELECTION, MAXIMUM LOAD CURRENT, AND SWITCHING FREQUENCY

The PFM peak current control scheme of the TPS61042 is inherently stable. The inductor value does not affect the stability of the regulator. The selection of the inductor together with the nominal LED current, input, and output voltage of the application determines the switching frequency of the converter.

The first step is to calculate the maximum load current the converter can support using the selected inductor. The inductor value has less effect on the maximum available load current and is only of secondary order. A good inductor value to start with is 4.7 µH. Depending on the application, inductor values down to 1.0 µH can be used. The maximum inductor value is determined by the maximum on time of the switch of 6 µs (typ). The peak current limit of 500 mA (typ) must be reached within this 6 µs for proper operation. The maximum load current of the converter is determined at the operation point where the converter starts to enter the continuous conduction mode. The converter must always operate in discontinuous conduction mode to maintain regulation.

Depending on the time period of the inductor current fall time being larger or smaller compared to the minimum off time of the converter (400ns typ), the maximum load current can be calculated.

Inductor fall time:

$$t_{fall} = \frac{ip \times L}{Vout - Vin}$$

For $t_{fall} \geq 400ns$

$$I_{load\ max} = \eta \frac{ip \times Vin}{2 \times Vout}$$

for $t_{fall} \leq 400ns$

$$I_{load\ max} = \eta \times \frac{ip^2 \times L \times Vin}{(Vout - Vin) \times (2 \times ip \times L + 2 \times 400\ ns \times Vin)}$$

with:

L = selected inductor value

η = expected converter efficiency. Typically between 70% to 85%

$i_p = 400\ mA + \frac{Vin}{2} \times 100\ ns$ (Peak inductor current as described in the *peak current control* section)

The above formula contains the expected converter efficiency that allows calculating the expected maximum load current the converter can support. The efficiency can be taken out of the efficiency graphs shown in Figure 2 and Figure 3 or 80% can be used as an accurate estimation.

If the converter can support the desired LED current, the next step is to calculate the converter switching frequency at the operation point, which must be ≤1 MHz. Also the converter switching frequency should be much higher than the applied PWM frequency at the CTRL pin to avoid non-linear brightness control. Assuming the converter shows no double pulses or pulse bursts (Figure 13, Figure 14) on the switch node (SW) the switching frequency at the operation point can be calculated as:

$$f_{s(ILOAD)} = \frac{2 \times I_{LOAD} \times \left(V_O - V_I + V_F\right)}{\left(I_{(LIM)} + \frac{V_I}{2} \times 100\ ns\right)^2 \times L}$$

with:

$I_{(LIM)}$ = minimum switch current limit (500 mA typ)

L = selected inductor value

$I_{(LOAD)}$ = nominal load or LED current

V_F = Rectifier diode forward voltage (typically 0.3 V)

The smaller the inductor value, the higher the switching frequency of the converter but the lower the efficiency.

The selected inductor must have a saturation current that meets the maximum peak current of the converter as calculated in the *peak current control* section. Use the maximum value for $I_{(LIM)}$ (600mA) for this calculation.

Another important inductor parameter is the DC resistance. The lower the DC resistance the higher the efficiency of the converter. See Table 1and Figure 22to Figure 27for inductor selection.

Table 1. Possible Inductor

Inductor Value	Component Supplier	Size
10 µH	muRata LQH43CN100K01	4,5 mm×3,2 mm×2.6 mm
4.7 µH	muRata LQH32CN4R7M11	3,2 mm×2,5 mm×2,0 mm
10 µH	Coilcraft DO1605T-103MX	5,5 mm ×4,1 mm ×1,8 mm
4.7 µH	Sumida CDRH3D16-4R7	3,8 mm×3,8 mm×1,8 mm
3.3 µH	Sumida CMD4D11- 3R3	3,5 mm×5,3 mm×1,2 mm
4.7 µH	Sumida CMD4D11- 4R7	3,5 mm×5,3 mm×1,2 mm
3.3 µH	Sumida CMD4D11- 3R3	3,5 mm×5,3 mm×1,2 mm
4.7 µH	Coiltronics SD12-4R7	5,2 mm×5,2 mm×1,2 mm
3.3 µH	Coilcraft LPO1704-332M	6,6 mm×5,5 mm×1,0 mm
4.7 µH	Coilcraft LPO1704-472M	6,6 mm×5,5 mm×1,0 mm

output capacitor selection and line regulation

For better output voltage filtering, a low ESR output capacitor is recommended. Ceramic capacitors have a low ESR value, but depending on the application, tantalum capacitors can be used.

The selection of the output capacitor value directly influences the output voltage ripple of the converter which also influences line regulation. The larger the output voltage ripple, the larger the line regulation, which means that the LED current changes if the input voltage changes. If a certain change in LED current gives a noticeable change in LED brightness, depends on the LED manufacturer and on the application. Applications requiring good line regulation ≤1%/V (typ) must use output capacitor values ≥1 µF.

See Table 2 and Figure 22 to Figure 27 for the selection of the output capacitor.

Assuming the converter does not show double pulses or pulse bursts on the switch node (SW), the output voltage ripple is calculated as (see Figure 13, Figure 14):

$$\Delta V_O = \frac{I_O}{C_O} \times \left[\frac{1}{f_{s(ILOAD)}} - \frac{\left(I_{(LIM)} + \frac{V_I}{2} \times 100\text{ ns} \right) \times L}{V_O + V_F - V_I} \right] + I_P \times ESR$$

with:

$I_{(LIM)}$ = minimum switch current limit (400 mA typ)

L = selected inductor value

$I_{(LOAD)}$ = nominal load current

f_S = switching frequency at the nominal load current as calaculated before.

V_F = rectifier diode forward voltage (0.3 V typ)

C_O = selected output capacitor

ESR = output capacitor ESR value

INPUT CAPACITOR SELECTION

For good input voltage filtering, low ESR ceramic capacitors are recommended. A 4.7 µF ceramic input capacitor is sufficient for most applications. For better input voltage filtering the capacitor value can be increased. Refer to Table 2 and Figure 22 to Figure 27 for input capacitor selection.

Table 2. Possible Input and Output Capacitors

Capacitor	Voltage rating	Component Supplier	Comments
4.7 µF/X5R/0805	6.3 V	Tayo Yuden JMK212BY475MG	C_I
10 µF/X5R/0805	6.3 V	Tayo Yuden JMK212BJ106MG	C_I
100 nF		Any	C_O
220 nF		Any	C_O
470 nF		Any	C_O
1.0 µF/X7R/1206	25 V	Tayo Yuden TMK316BJ105KL	C_O
1.0 µF/X7R/1206	35 V	Tayo Yuden GMK316BJ105KL	C_O
4.7 µF/X5R/1210	25 V	Tayo Yuden TMK325BJ475MG	C_O

DIODE SELECTION

To achieve high efficiency a Schottky diode must be used. The current rating of the diode must meet the peak current rating of the converter as it is calculated in the *peak current control* section. Use the maximum value for $I_{(Lim)}$ for this calculation. See Table 3 and Figure 22 to Figure 27 for the Schottky diode selection.

Table 3. Possible Diodes

Component Supplier	Reverse voltage
ON Semiconductor MBR0530	30 V
ON Semiconductor MBR0520	20 V
Toshiba CRS02	30 V
Zetex ZHCS400	40 V

EFFICIENCY

The overall efficiency of the application depends on the specific application conditions and mainly on the selection of the inductor. A lower inductor value increases the switching frequency and switching losses yielding in a lower efficiency. A lower inductor dc resistance has lower copper losses, giving a higher efficiency. Therefore, the efficiency can typically vary ±5% depending on the selected inductor. Figure 2 and Figure 3 can be used as a guideline for the application efficiency. These curves show the typical efficiency powering four LEDs using a 4.7 µH inductor with just 1,2 mm height. The efficiency curve in Figure 2 and Figure 3 show the efficiency delivering the power to the LEDs rather than the overall converter efficiency and is calculated as:

$$\eta = \frac{V_{LED} \times I_{LED}}{V_I \times I_I}$$

SETTING THE LED CURRENT

The converter regulates the LED current by regulating the voltage across the current sense resistor (R_S). The voltage across the sense resistor is regulated to the internal reference voltage of $V_{(FB)}$ = 252 mV.

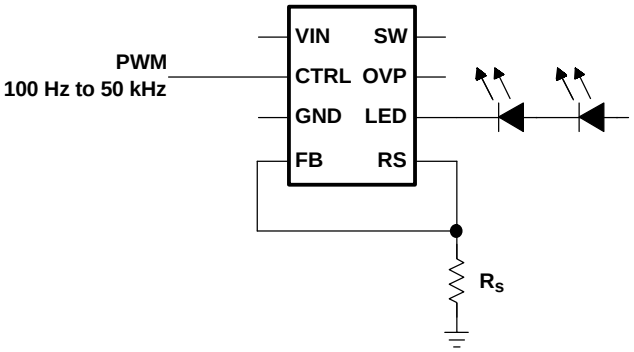

Figure 17. Setting the LED Current

The LED current can be calculated:

$$I_{LED} = \frac{V_{FB}}{R_S} = \frac{0.252\ V}{R_S}$$

The current programming method is used when the brightness of the LEDs is fixed or controlled by a PWM signal applied to the CTRL pin. When using a PWM signal on the CTRL pin, the LED brightness is only dependent on the PWM duty cycle, independent of the PWM frequency, or amplitude, which simplifies the system.

Alternatively, an analog voltage can be used as well to control the LED brightness.

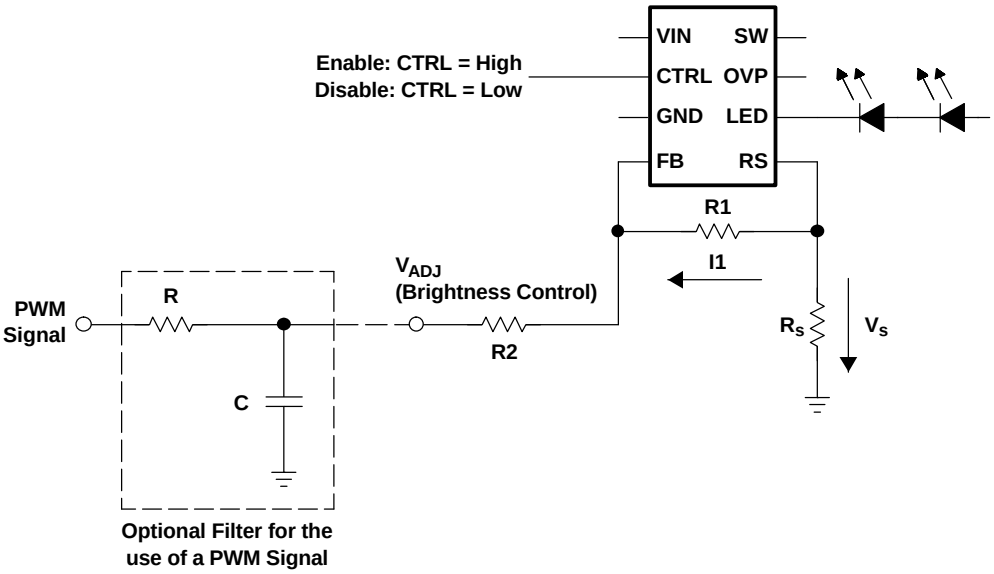

Figure 18. Setting the LED Current

In Figure 18 the LED current is determined by the voltage applied to R2 ($V_{(adj)}$) and the selection of R1, R2 and the sense resistor (R_S). In this configuration, the LED current is linear controlled instead of pulsed as in the configuration before. To select the resistor values following steps are required.

- Select the voltage $V_{(adjmax)}$ to turn the LEDs off. → $V_{(adjmax)}$ (e.g. 3.3 V)
- Select the voltage $V_{(adjmin)}$ to turn the LEDs fully on. → $V_{(adjmin)}$ (e.g. 0.0 V)
- Select the maximum and minimum LED current $I_{O(max)}$ and $I_{O(min)}$. → (e.g. $I_{O(max)}$ = 20 mA, $I_{O(min)}$ = 0 mA)
- Calculate R2 to achieve a feedback current in the range of I1 = 3 µA to 10 µA as the LEDs are fully turned on:

$$R2 = \frac{V_{ref} - V_{adj(min)}}{I1}$$

- Calculation of R1

$$R1 = V_{ref} \times \frac{I_{O(max)} \times R2 + V_{adj(min)} - I_{O(min)} \times R2 - V_{adj(max)}}{V_{adj(max)} \times I_{O(max)} + V_{ref} \times I_{O(min)} - V_{adj(min)} \times I_{O(min)} - V_{ref} \times I_{O(max)}}$$

- Calculation of the sense voltage (V_S) at maximum LED current

$$V_S = V_{ref} \times \left(1 + \frac{R1}{R2}\right) - \frac{R1}{R2} \times V_{adj(min)}$$

- Calculation of the required sense resistor (R_S)

$$R_S = \frac{V_S}{I_{O(max)}}$$

PWM CONTROL WITH SEPARATE ENABLE

The control pin (CTRL) combines the enable function as well as the PWM brightness control function in one pin. For some systems an independent enable function is required. One way to implement this is to use the brightness control configuration as shown in the previous section Figure 18.

Other possible solutions are shown in Figure 19, Figure 20, Figure 21.

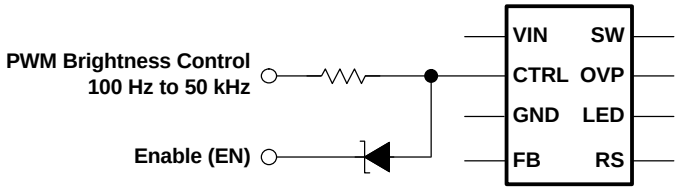

Figure 19. Separate Enable and PWM Control Using a Schottky Diode

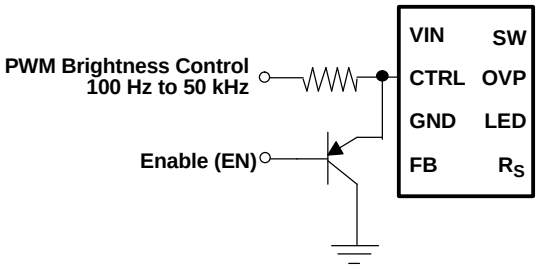

Figure 20. Separate Enable and PWM Control Using a Transistor

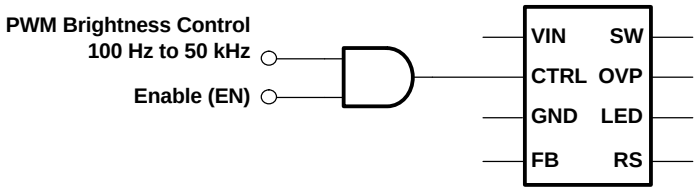

Figure 21. Separate Enable and PWM Control Using an AND Gate

Layout Considerations

In all switching power supplies the layout is an important step in the design, especially at high peak currents and switching frequencies. If the layout is not carefully done, the regulator might show noise problems and duty cycle jitter.

The input capacitor should be placed as close as possible to the input pin for good input voltage filtering. The inductor and diode must be placed as close as possible to the switch pin to minimize noise coupling into other circuits. Since the feedback pin and network is a high impedance circuit, the feedback network should be routed away from the inductor.

THERMAL CONSIDERATIONS

The TPS61042 comes in a thermally enhanced QFN package. The package includes a thermal pad improving the thermal capabilities of the package. See the QFN/SON PCB Attachment application note (SLUA271).

The thermal resistance junction to ambient $R_{\Theta JA}$ of the QFN package greatly depends on the PCB layout. Using thermal vias and wide PCB traces improves the thermal resistance $R_{\Theta JA}$. Under normal operation conditions no PCB vias are required for the thermal pad. However, the thermal pad must be soldered to the PCB.

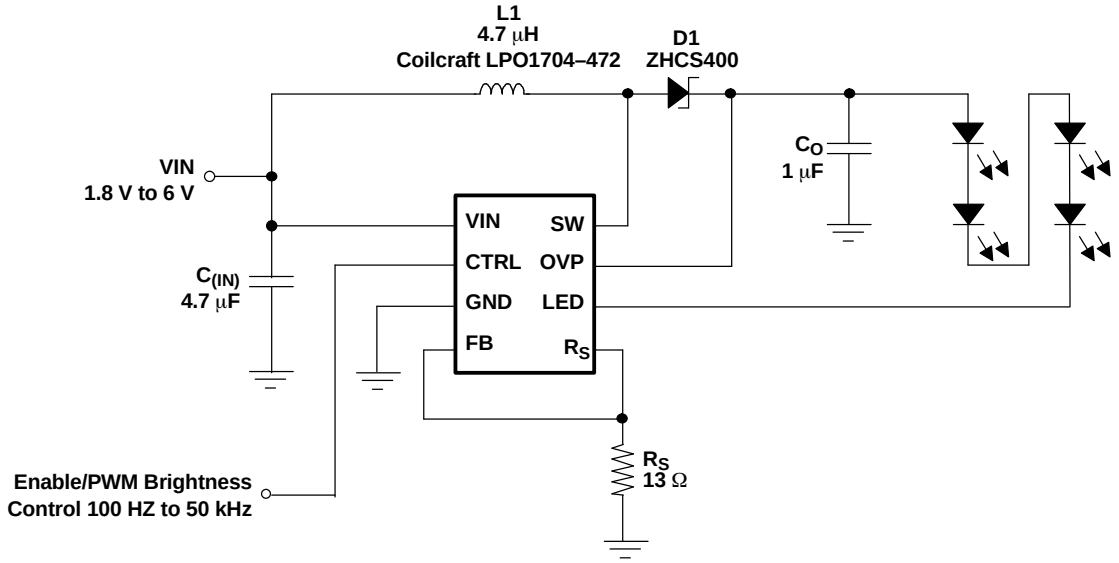

Figure 22. TPS61042 With 1,0 mm Total System Height. Efficiency = 82.7%@V_I = 3.0 V/19 mA

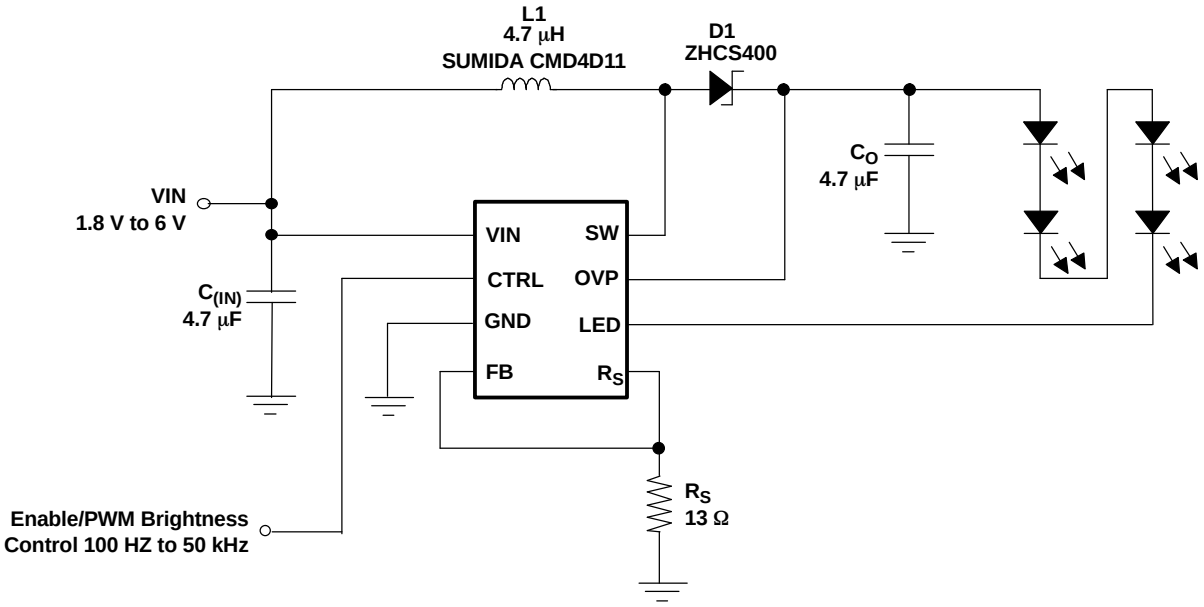

Figure 23. TPS61042 With Low LED Ripple Current and Higher Accuracy Using a 4.7 µF Output Capacitor

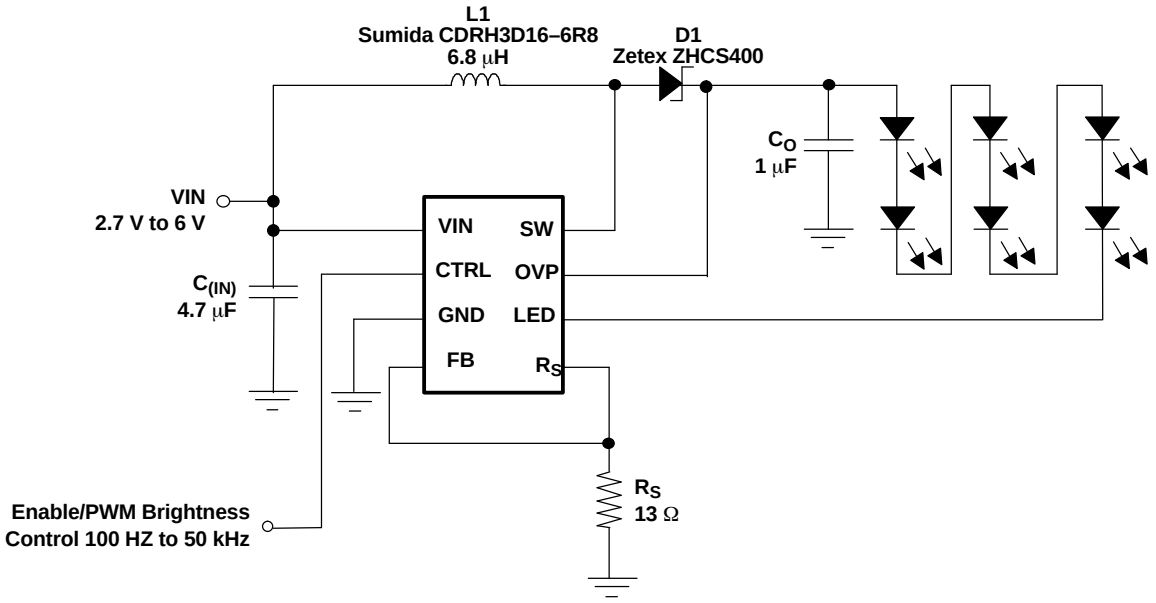

Figure 24. TPS61042 Powering 6 LEDs, Efficiency = 84%@V_I = 3.6 V/19 mA

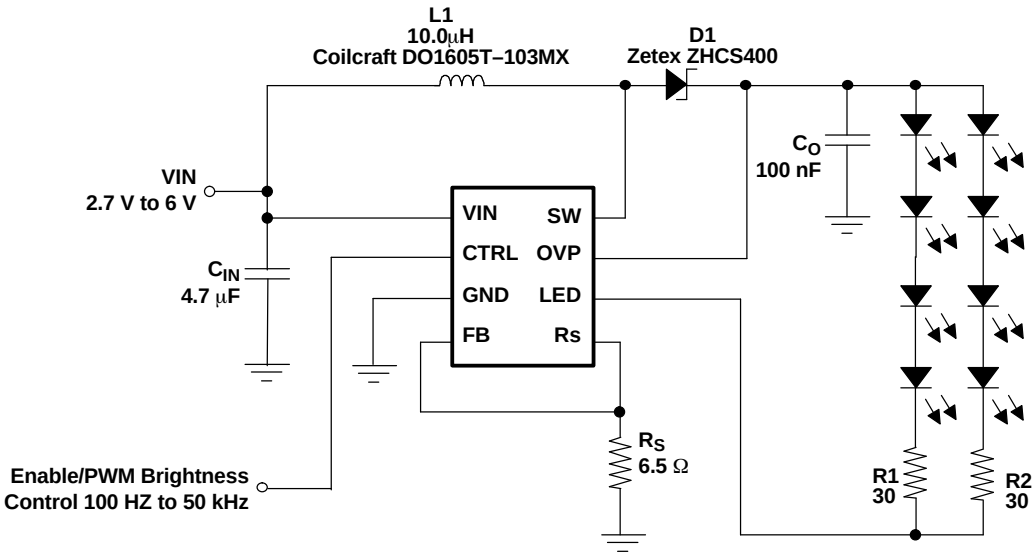

Figure 25. TPS61042 Powering 8 LEDs, Efficiency = 81%@V_I = 3.6 V/18.6 mA

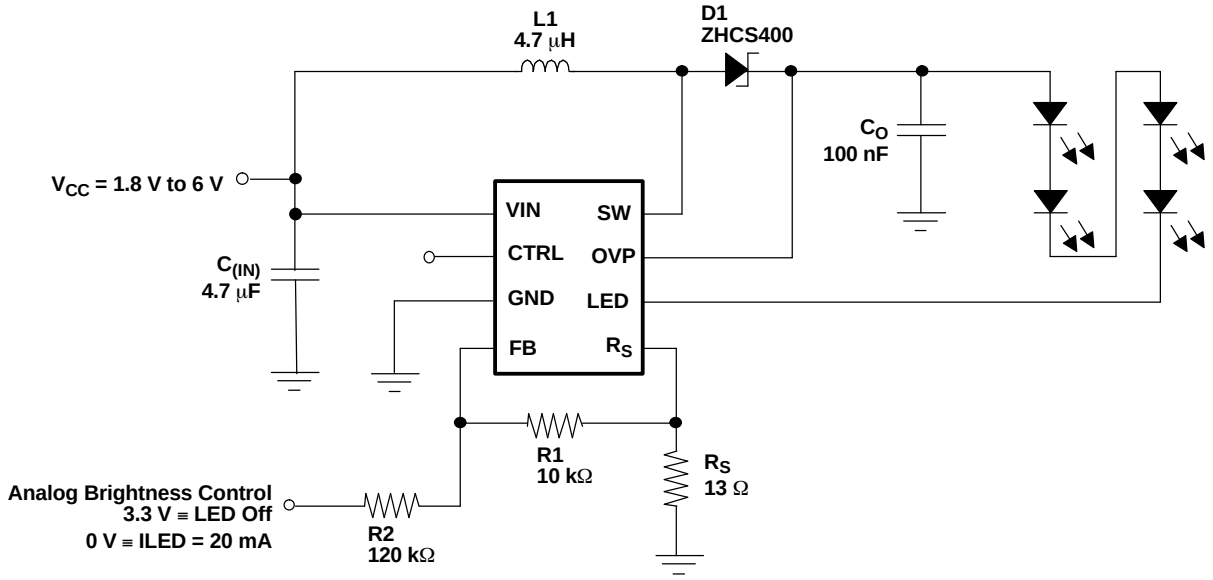

Figure 26. Adjustable Brightness Control Using an Analog Voltage

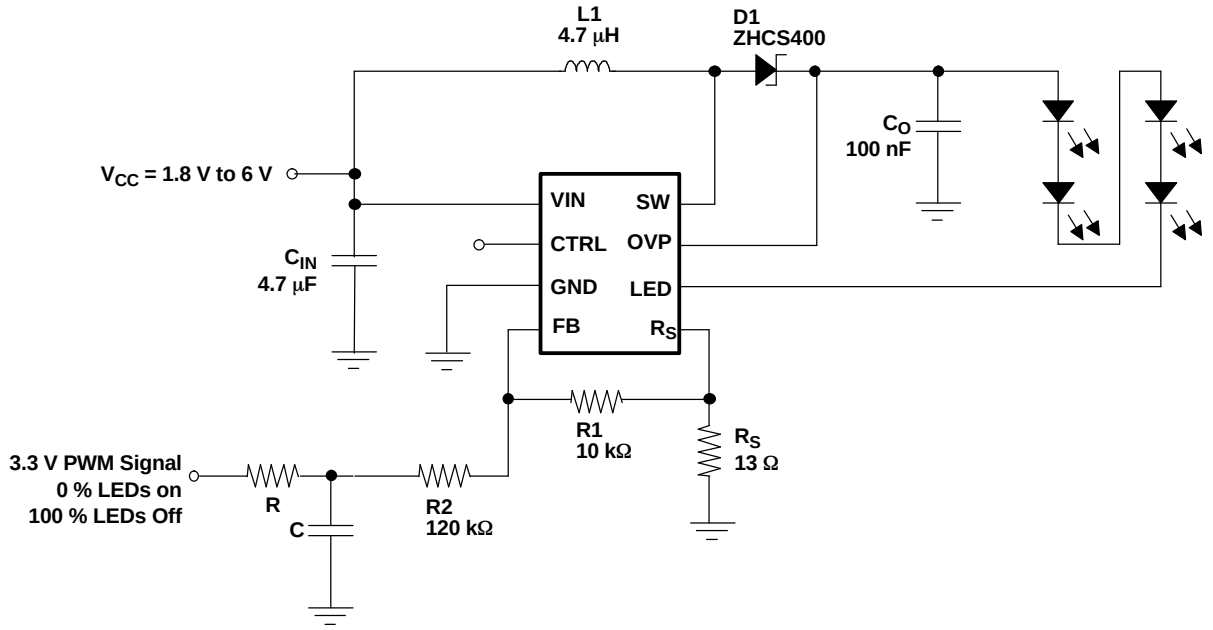

Figure 27. Alternative Adjustable Brightness Control Using PWM Signal

PACKAGING INFORMATION

Orderable Device	Status [1]	Package Type	Package Drawing	Pins	Package Qty	Eco Plan [2]	Lead/Ball Finish	MSL Peak Temp [3]
TPS61042DRBR	ACTIVE	SON	DRB	8	3000	Green (RoHS & no Sb/Br)	CU NIPDAU	Level-2-260C-1 YEAR
TPS61042DRBT	ACTIVE	SON	DRB	8	250	Green (RoHS & no Sb/Br)	CU NIPDAU	Level-2-260C-1 YEAR

[1] The marketing status values are defined as follows:
ACTIVE: Product device recommended for new designs.
LIFEBUY: TI has announced that the device will be discontinued, and a lifetime-buy period is in effect.
NRND: Not recommended for new designs. Device is in production to support existing customers, but TI does not recommend using this part in a new design.
PREVIEW: Device has been announced but is not in production. Samples may or may not be available.
OBSOLETE: TI has discontinued the production of the device.

[2] Eco Plan - The planned eco-friendly classification: Pb-Free (RoHS), Pb-Free (RoHS Exempt), or Green (RoHS & no Sb/Br) - please check http://www.ti.com/productcontent for the latest availability information and additional product content details.
TBD: The Pb-Free/Green conversion plan has not been defined.
Pb-Free (RoHS): TI's terms "Lead-Free" or "Pb-Free" mean semiconductor products that are compatible with the current RoHS requirements for all 6 substances, including the requirement that lead not exceed 0.1% by weight in homogeneous materials. Where designed to be soldered at high temperatures, TI Pb-Free products are suitable for use in specified lead-free processes.
Pb-Free (RoHS Exempt): This component has a RoHS exemption for either 1) lead-based flip-chip solder bumps used between the die and package, or 2) lead-based die adhesive used between the die and leadframe. The component is otherwise considered Pb-Free (RoHS compatible) as defined above.
Green (RoHS & no Sb/Br): TI defines "Green" to mean Pb-Free (RoHS compatible), and free of Bromine (Br) and Antimony (Sb) based flame retardants (Br or Sb do not exceed 0.1% by weight in homogeneous material)

[3] MSL, Peak Temp. -- The Moisture Sensitivity Level rating according to the JEDEC industry standard classifications, and peak solder temperature.

Important Information and Disclaimer: The information provided on this page represents TI's knowledge and belief as of the date that it is provided. TI bases its knowledge and belief on information provided by third parties, and makes no representation or warranty as to the accuracy of such information. Efforts are underway to better integrate information from third parties. TI has taken and continues to take reasonable steps to provide representative and accurate information but may not have conducted destructive testing or chemical analysis on incoming materials and chemicals. TI and TI suppliers consider certain information to be proprietary, and thus CAS numbers and other limited information may not be available for release.

In no event shall TI's liability arising out of such information exceed the total purchase price of the TI part(s) at issue in this document sold by TI to Customer on an annual basis.

DRB (S–PDSO–N8) PLASTIC SMALL OUTLINE

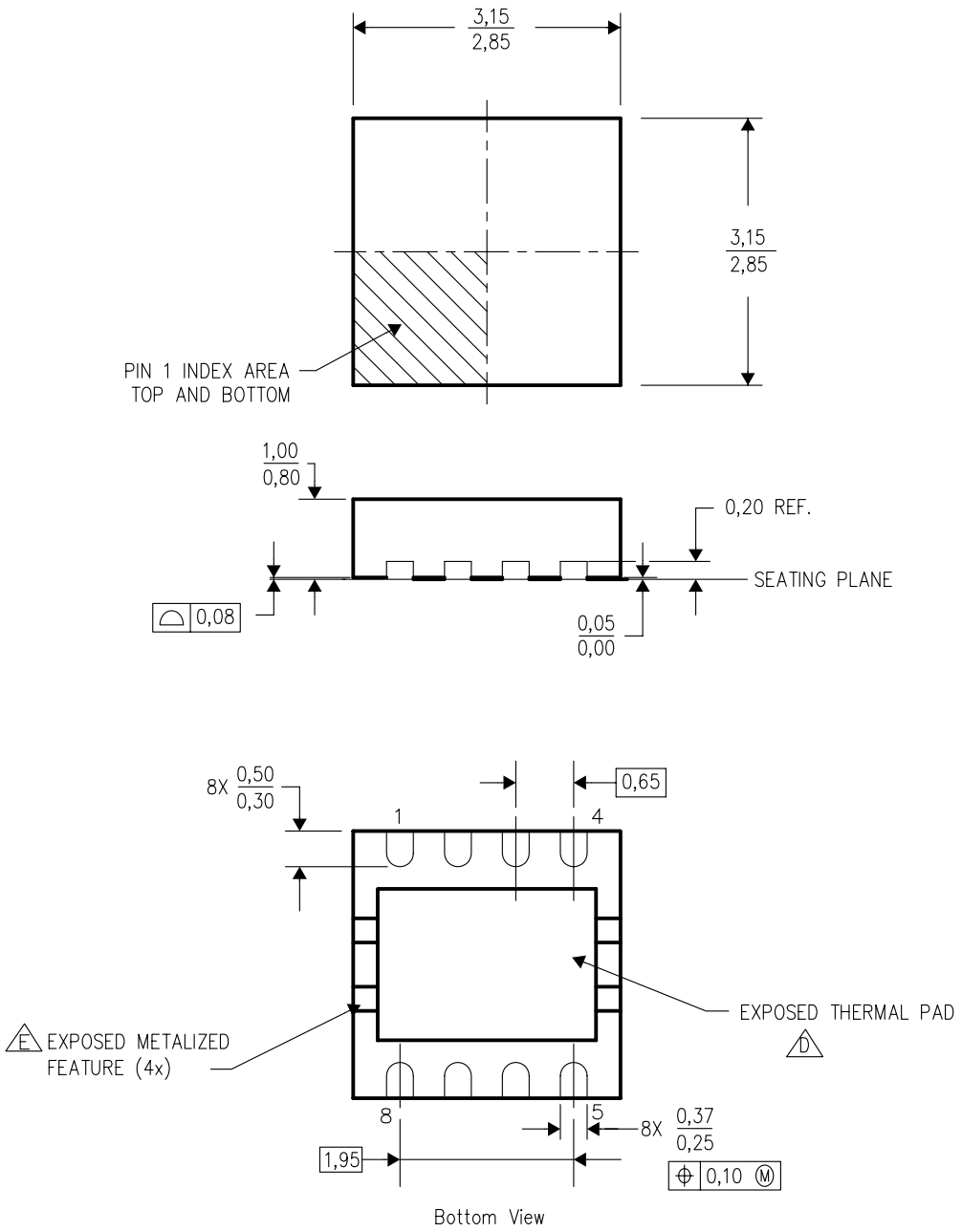

4203482/G 11/04

NOTES:
A. All linear dimensions are in millimeters. Dimensioning and tolerancing per ASME Y14.5M–1994.
B. This drawing is subject to change without notice.
C. Small Outline No–Lead (SON) package configuration.
D. The package thermal pad must be soldered to the board for thermal and mechanical performance. See the Product Data Sheet for details regarding the exposed thermal pad dimensions.
E. Metalized features are supplier options and may not be on the package.

THERMAL INFORMATION

This package incorporates an exposed thermal pad that is designed to be attached directly to an external heatsink. The thermal pad must be soldered directly to the printed circuit board (PCB). After soldering, the PCB can be used as a heatsink. In addition, through the use of thermal vias, the thermal pad can be attached directly to a ground or power plane (whichever is applicable), or alternatively, a special heatsink structure designed into the PCB. This design optimizes the heat transfer from the integrated circuit (IC).

For information on the Quad Flatpack No-Lead (QFN) package and its advantages, refer to Application Report, Quad Flatpack No-Lead Logic Packages, Texas Instruments Literature No. SCBA017. This document is available at www.ti.com.

The exposed thermal pad dimensions for this package are shown in the following illustration.

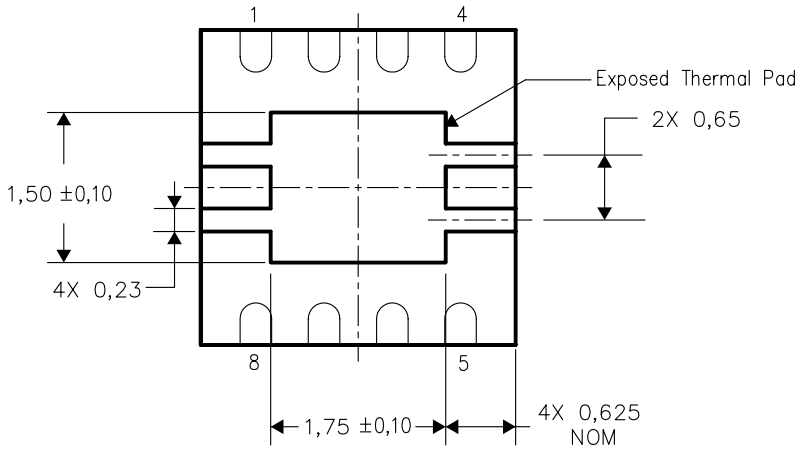

Bottom View

NOTE: All linear dimensions are in millimeters

Exposed Thermal Pad Dimensions

DRB (S–PDSO–N8)

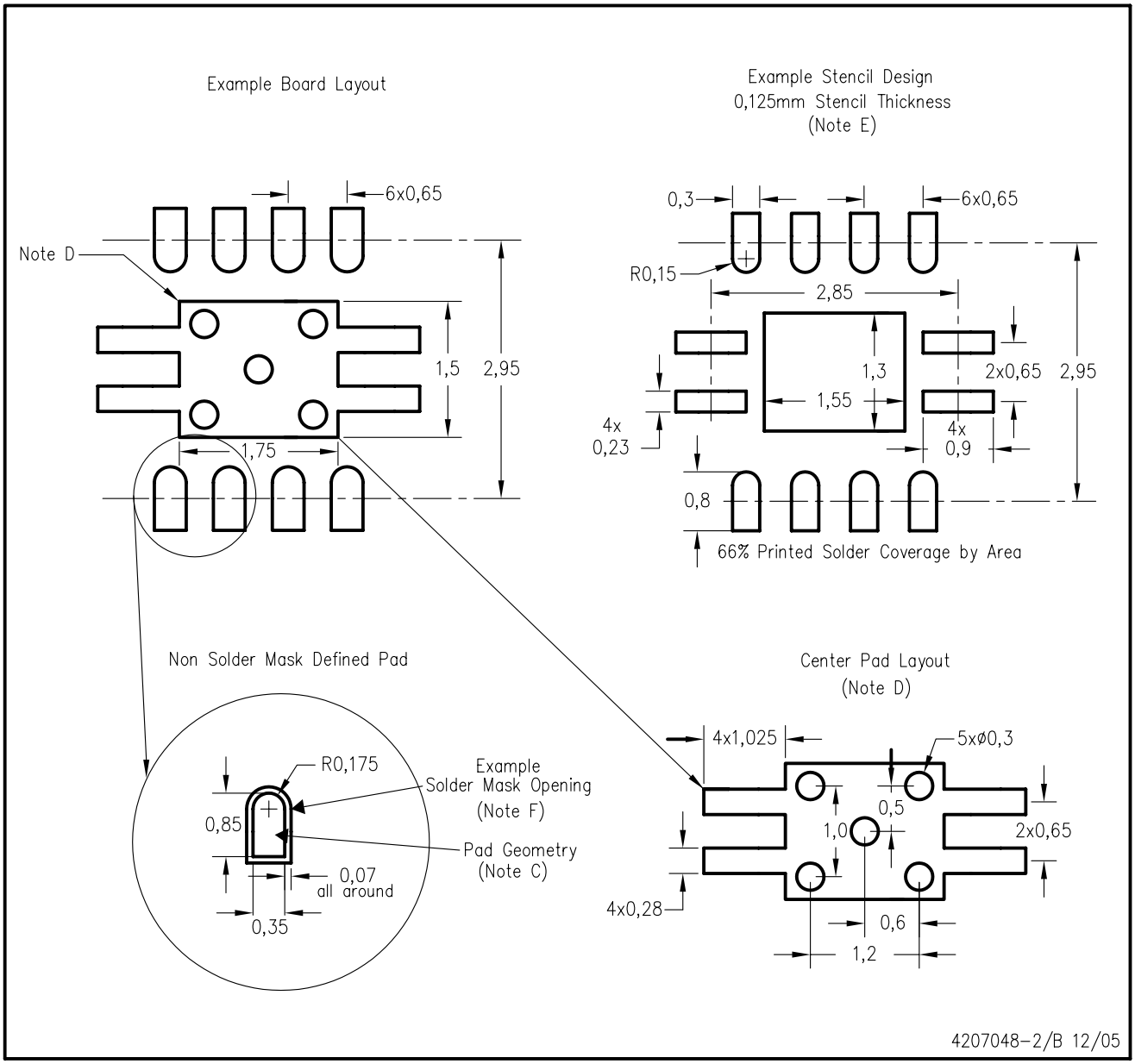

NOTES:
A. All linear dimensions are in millimeters.
B. This drawing is subject to change without notice.
C. Publication IPC–7351 is recommended for alternate designs.
D. This package is designed to be soldered to a thermal pad on the board. Refer to Application Note, QFN Packages, Texas Instruments Literature No. SCBA017, SLUA271, and also the Product Data Sheets for specific thermal information, via requirements, and recommended board layout. These documents are available at www.ti.com <http://www.ti.com>.
E. Laser cutting apertures with trapezoidal walls and also rounding corners will offer better paste release. Customers should contact their board assembly site for stencil design recommendations. Refer to IPC 7525 for stencil design considerations.
F. Customers should contact their board fabrication site for solder mask tolerances.

IMPORTANT NOTICE

Texas Instruments Incorporated and its subsidiaries (TI) reserve the right to make corrections, modifications, enhancements, improvements, and other changes to its products and services at any time and to discontinue any product or service without notice. Customers should obtain the latest relevant information before placing orders and should verify that such information is current and complete. All products are sold subject to TI's terms and conditions of sale supplied at the time of order acknowledgment.

TI warrants performance of its hardware products to the specifications applicable at the time of sale in accordance with TI's standard warranty. Testing and other quality control techniques are used to the extent TI deems necessary to support this warranty. Except where mandated by government requirements, testing of all parameters of each product is not necessarily performed.

TI assumes no liability for applications assistance or customer product design. Customers are responsible for their products and applications using TI components. To minimize the risks associated with customer products and applications, customers should provide adequate design and operating safeguards.

TI does not warrant or represent that any license, either express or implied, is granted under any TI patent right, copyright, mask work right, or other TI intellectual property right relating to any combination, machine, or process in which TI products or services are used. Information published by TI regarding third-party products or services does not constitute a license from TI to use such products or services or a warranty or endorsement thereof. Use of such information may require a license from a third party under the patents or other intellectual property of the third party, or a license from TI under the patents or other intellectual property of TI.

Reproduction of information in TI data books or data sheets is permissible only if reproduction is without alteration and is accompanied by all associated warranties, conditions, limitations, and notices. Reproduction of this information with alteration is an unfair and deceptive business practice. TI is not responsible or liable for such altered documentation.

Resale of TI products or services with statements different from or beyond the parameters stated by TI for that product or service voids all express and any implied warranties for the associated TI product or service and is an unfair and deceptive business practice. TI is not responsible or liable for any such statements.

Following are URLs where you can obtain information on other Texas Instruments products and application solutions:

Products		**Applications**	
Amplifiers	amplifier.ti.com	Audio	www.ti.com/audio
Data Converters	dataconverter.ti.com	Automotive	www.ti.com/automotive
DSP	dsp.ti.com	Broadband	www.ti.com/broadband
Interface	interface.ti.com	Digital Control	www.ti.com/digitalcontrol
Logic	logic.ti.com	Military	www.ti.com/military
Power Mgmt	power.ti.com	Optical Networking	www.ti.com/opticalnetwork
Microcontrollers	microcontroller.ti.com	Security	www.ti.com/security
		Telephony	www.ti.com/telephony
		Video & Imaging	www.ti.com/video
		Wireless	www.ti.com/wireless

Mailing Address: Texas Instruments
Post Office Box 655303 Dallas, Texas 75265

Copyright © 2006, Texas Instruments Incorporated