FEATURES

- **Very Low Dropout Voltage, Less Than 0.6 V at 750 mA**
- **Low Quiescent Current**
- **TTL- and CMOS-Compatible Enable on TL751M Series**
- **60-V Load-Dump Protection**
- **Overvoltage Protection**
- **Internal Thermal-Overload Protection**
- **Internal Overcurrent-Limiting Circuitry**

TL750M . . . KC PACKAGE(1)
(TOP VIEW)

TL750M . . . KTP PACKAGE(1)
(TOP VIEW)

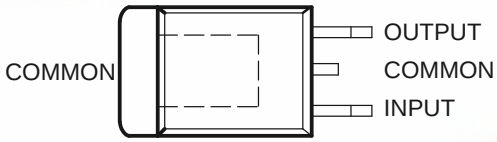

TL750M . . . KTE PACKAGE(1)
(TOP VIEW)

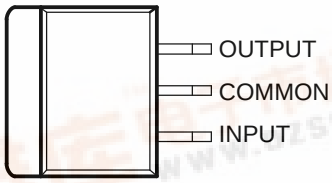

TL751M . . . KTG PACKAGE(1)
(TOP VIEW)

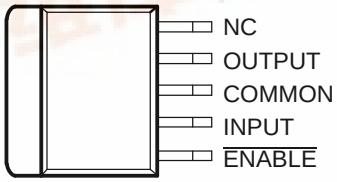

NC − No internal connection

(1) The common terminal is in electrical contact with the mounting base.

DESCRIPTION/ORDERING INFORMATION

The TL750M and TL751M series are low-dropout positive voltage regulators specifically designed for battery-powered systems. The TL750M and TL751M series incorporate onboard overvoltage and current-limiting protection circuitry to protect the devices and the regulated system. Both series are fully protected against 60-V load-dump and reverse-battery conditions. Extremely low quiescent current, even during full-load conditions, makes the TL750M and TL751M series ideal for standby power systems.

The TL750M and TL751M series offers 5-V, 8-V, 10-V, and 12-V options. The TL751M series has the addition of an enable ($\overline{\text{ENABLE}}$) input. The $\overline{\text{ENABLE}}$ input gives the designer complete control over power up, allowing sequential power up or emergency shutdown. When $\overline{\text{ENABLE}}$ is high, the regulator output is placed in the high-impedance state. The $\overline{\text{ENABLE}}$ input is TTL and CMOS compatible.

The TL750MxxC and TL751MxxC are characterized for operation over the virtual junction temperature range 0°C to 125°C.

ORDERING INFORMATION

T_J	V_O TYP	PACKAGE(1)		ORDERABLE PART NUMBER(2)	TOP-SIDE MARKING
0°C to 125°C	5 V	PowerFLEX™ – KTE	Reel of 2000	TL750M05CKTER	TL750M05C
		PowerFLEX – KTG	Reel of 2000	TL751M05CKTGR	TL751M05C
		PowerFLEX – KTP	Reel of 3000	TL750M05CKTPR	750M05C
		TO-220 – KC	Tube of 50	TL750M05CKC	TL750M05C
	10 V	TO-220 – KC	Tube of 50	TL750M10CKC	TL750M10C
	12 V	TO-220 – KC	Tube of 50	TL750M12CKC	TL750M12C

(1) Package drawings, standard packing quantities, thermal data, symbolization, and PCB design guidelines are available at www.ti.com/sc/package.
(2) For the most current ordering information, see the Package Option Addendum at the end of this data sheet.

TL751Mxx FUNCTIONAL BLOCK DIAGRAM

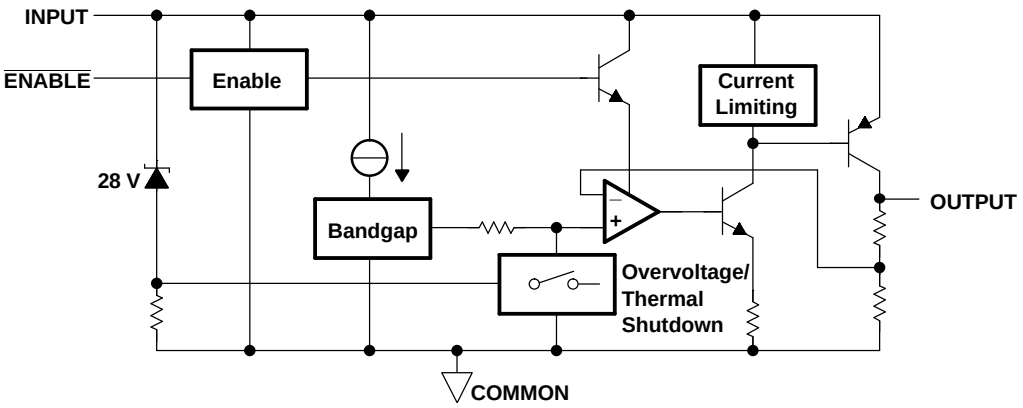

DEVICE COMPONENT COUNT	
Transistors	46
Diodes	14
Resistors	44
Capacitors	4
JFETs	1
Tunnels (emitter R)	2

Absolute Maximum Ratings[(1)]

over virtual junction temperature range (unless otherwise noted)

			MIN	MAX	UNIT
	Continuous input voltage			26	V
	Transient input voltage (see Figure 3)			60	V
	Continuous reverse input voltage			–15	V
	Transient reverse input voltage	t = 100 ms		–50	V
θ_{JA}	Package thermal impedance[(2)(3)]	KC package		22	°C/W
		KTE package		23	
		KTG package		23	
		KTP package		28	
T_J	Virtual junction temperature range		0	150	°C
	Lead temperature	1,6 mm (1/16 in) from case for 10 s		260	°C
T_{stg}	Storage temperature range		–65	150	°C

(1) Stresses beyond those listed under "absolute maximum ratings" may cause permanent damage to the device. These are stress ratings only, and functional operation of the device at these or any other conditions beyond those indicated under "recommended operating conditions" is not implied. Exposure to absolute-maximum-rated conditions for extended periods may affect device reliability.
(2) Maximum power dissipation is a function of $T_J(max)$, θ_{JA}, and T_A. The maximum allowable power dissipation at any allowable ambient temperature is $P_D = (T_J(max) – T_A)/\theta_{JA}$. Operating at the absolute maximum T_J of 150°C can affect reliability. Due to variation in individual device electrical characteristics and thermal resistance, the built-in thermal-overload protection may be activated at power levels slightly above or below the rated dissipation.
(3) The package thermal impedance is calculated in accordance with JESD 51.

Recommended Operating Conditions

			MIN	MAX	UNIT
V_I	Input voltage	TL75xM05	6	26	V
		TL75xM08	9	26	
		TL75xM10	11	26	
		TL75xM12	13	26	
V_{IH}	High-level $\overline{\text{ENABLE}}$ input voltage	TL751Mxx	2	15	V
V_{IL}	Low-level $\overline{\text{ENABLE}}$ input voltage	TL751Mxx	0	0.8	V
I_O	Output current	TL75xMxxC		750	mA
T_J	Operating virtual junction temperature	TL75xMxxC	0	125	°C

TL751MxxC Switching Characteristics

V_I = 14 V, I_O = 300 mA, T_J = 25°C (unless otherwise noted)

PARAMETER		TL751MxxC	UNIT
		TYP	
t_r	Response time, $\overline{\text{ENABLE}}$ to output	50	µs

TL75xM05C Electrical Characteristics[(1)]

V_I = 14 V, I_O = 300 mA, $\overline{ENABLE}$ = 0 V for TL751M05, T_J = 25°C (unless otherwise noted)

PARAMETER	TEST CONDITIONS	TL750M05C TL751M05C			UNIT
		MIN	TYP	MAX	
Output voltage		4.95	5	5.05	V
	T_J = 0°C to 125°C	4.9		5.1	
Input voltage regulation	V_I = 9 V to 16 V, I_O = 250 mA		10	25	mV
	V_I = 6 V to 26 V, I_O = 250 mA		12	50	
Ripple rejection	V_I = 8 V to 18 V, f = 120 Hz	50	55		dB
Output regulation voltage	I_O = 5 mA to 750 mA		20	50	mV
Dropout voltage	I_O = 500 mA			0.5	V
	I_O = 750 mA			0.6	
Output noise voltage	f = 10 Hz to 100 kHz		500		µV
Bias current	I_O = 750 mA		60	75	mA
	I_O = 10 mA			5	
Bias current (TL751Mxx only)	$\overline{ENABLE}$ ≥ 2 V			200	µA

(1) Pulse-testing techniques maintain the junction temperature as close to the ambient temperature as possible. Thermal effects must be taken into account separately. All characteristics are measured with a 0.1-µF capacitor across the input and a 10-µF tantalum capacitor on the output, with equivalent series resistance within the guidelines shown in Figure 1.

TL75xM08C Electrical Characteristics[(1)]

V_I = 14 V, I_O = 300 mA, $\overline{ENABLE}$ = 0 V for TL751M08, T_J = 25°C (unless otherwise noted)

PARAMETER	TEST CONDITIONS	TL750M08C TL751M08C			UNIT
		MIN	TYP	MAX	
Output voltage		7.92	8	8.08	V
	T_J = 0°C to 125°C	7.84		8.16	
Input voltage regulation	V_I = 10 V to 17 V, I_O = 250 mA		12	40	mV
	V_I = 9 V to 26 V, I_O = 250 mA		15	68	
Ripple rejection	V_I = 11 V to 21 V, f = 120 Hz	50	55		dB
Output regulation voltage	I_O = 5 mA to 750 mA		24	80	mV
Dropout voltage	I_O = 500 mA			0.5	V
	I_O = 750 mA			0.6	
Output noise voltage	f = 10 Hz to 100 kHz		500		µV
Bias current	I_O = 750 mA		60	75	mA
	I_O = 10 mA			5	
Bias current (TL751Mxx only)	$\overline{ENABLE}$ ≥ 2 V			200	µA

(1) Pulse-testing techniques maintain the junction temperature as close to the ambient temperature as possible. Thermal effects must be taken into account separately. All characteristics are measured with a 0.1-µF capacitor across the input and a 10-µF tantalum capacitor on the output, with equivalent series resistance within the guidelines shown in Figure 1.

TL75xM10C Electrical Characteristics[(1)]

V_I = 14 V, I_O = 300 mA, $\overline{ENABLE}$ = 0 V for TL751M10, T_J = 25°C (unless otherwise noted)

PARAMETER	TEST CONDITIONS	TL750M10C TL751M10C			UNIT
		MIN	TYP	MAX	
Output voltage		9.9	10	10.1	V
	T_J = 0°C to 125°C	9.8		10.2	
Input voltage regulation	V_I = 12 V to 18 V, I_O = 250 mA		15	43	mV
	V_I = 11 V to 26 V, I_O = 250 mA		20	75	
Ripple rejection	V_I = 13 V to 23 V, f = 120 Hz	50	55		dB
Output regulation voltage	I_O = 5 mA to 750 mA		30	100	mV
Dropout voltage	I_O = 500 mA			0.5	V
	I_O = 750 mA			0.6	
Output noise voltage	f = 10 Hz to 100 kHz		1000		µV
Bias current	I_O = 750 mA		60	75	mA
	I_O = 10 mA			5	
Bias current (TL751Mxx only)	$\overline{ENABLE}$ ≥ 2 V			200	µA

(1) Pulse-testing techniques maintain the junction temperature as close to the ambient temperature as possible. Thermal effects must be taken into account separately. All characteristics are measured with a 0.1-µF capacitor across the input and a 10-µF tantalum capacitor on the output, with equivalent series resistance within the guidelines shown in Figure 1.

TL75xM12C Electrical Characteristics[(1)]

V_I = 14 V, I_O = 300 mA, $\overline{ENABLE}$ = 0 V for TL751M12, T_J = 25°C (unless otherwise noted)

PARAMETER	TEST CONDITIONS	TL750M12C TL751M12C			UNIT
		MIN	TYP	MAX	
Output voltage		11.88	12	12.12	V
	T_J = 0°C to 125°C	11.76		12.24	
Input voltage regulation	V_I = 14 V to 19 V, I_O = 250 mA		15	43	mV
	V_I = 13 V to 26 V, I_O = 250 mA		20	78	
Ripple rejection	V_I = 13 V to 23 V, f = 120 Hz	50	55		dB
Output regulation voltage	I_O = 5 mA to 750 mA		30	120	mV
Dropout voltage	I_O = 500 mA			0.5	V
	I_O = 750 mA			0.6	
Output noise voltage	f = 10 Hz to 100 kHz		1000		µV
Bias current	I_O = 750 mA		60	75	mA
	I_O = 10 mA			5	
Bias current (TL751Mxx only)	$\overline{ENABLE}$ ≥ 2 V			200	µA

(1) Pulse-testing techniques maintain the junction temperature as close to the ambient temperature as possible. Thermal effects must be taken into account separately. All characteristics are measured with a 0.1-µF capacitor across the input and a 10-µF tantalum capacitor on the output, with equivalent series resistance within the guidelines shown in Figure 1.

PARAMETER MEASUREMENT INFORMATION

The TL750Mxx is a low-dropout regulator. This means that the capacitance loading is important to the performance of the regulator because it is a vital part of the control loop. The capacitor value and the equivalent series resistance (ESR) both affect the control loop and must be defined for the load range and the temperature range. Figure 1 and Figure 2 can establish the capacitance value and ESR range for the best regulator performance.

Figure 1 shows the recommended range of ESR for a given load with a 10-µF capacitor on the output. This figure also shows a maximum ESR limit of 2 Ω and a load-dependent minimum ESR limit.

For applications with varying loads, the lightest load condition should be chosen because it is the worst case. Figure 2 shows the relationship of the reciprocal of ESR to the square root of the capacitance with a minimum capacitance limit of 10 µF and a maximum ESR limit of 2 Ω. This figure establishes the amount that the minimum ESR limit shown in Figure 1 can be adjusted for different capacitor values.

For example, where the minimum load needed is 200 mA, Figure 1 suggests an ESR range of 0.8 Ω to 2 Ω for 10 µF. Figure 2 shows that changing the capacitor from 10 µF to 400 µF can change the ESR minimum by greater than 3/0.5 (or 6). Therefore, the new minimum ESR value is 0.8/6 (or 0.13 Ω). This allows an ESR range of 0.13 Ω to 2 Ω , achieving an expanded ESR range by using a larger capacitor at the output. For better stability in low-current applications, a small resistance placed in series with the capacitor (see Table 1) is recommended, so that ESRs better approximate those shown in Figure 1 and Figure 2.

Table 1. Compensation for Increased Stability at Low Currents

MANUFACTURER	CAPACITANCE	ESR TYP	PART NUMBER	ADDITIONAL RESISTANCE
AVX	15 µF	0.9 Ω	TAJB156M010S	1 Ω
KEMET	33 µF	0.6 Ω	T491D336M010AS	0.5 Ω

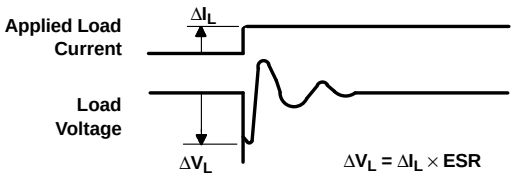

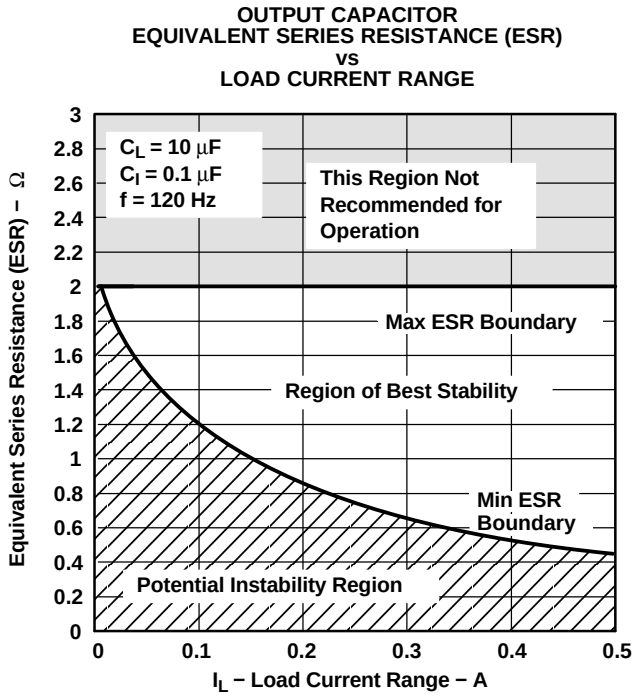

Figure 1.

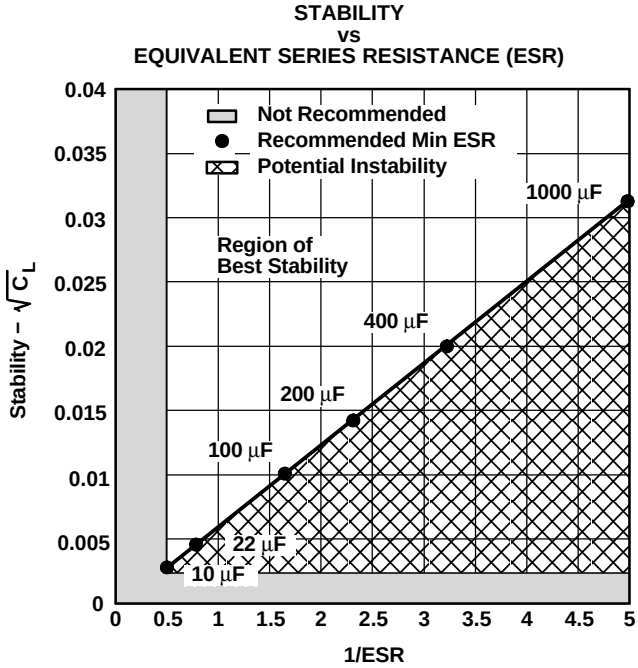

Figure 2.

TYPICAL CHARACTERISTICS

Table of Graphs

		FIGURE
Transient input voltage vs Time		3
Output voltage vs Input voltage		4
Input current vs Input voltage	I_O = 10 mA	5
	I_O = 100 mA	6
Dropout voltage vs Output current		7
Quiescent voltage vs Output current		8
Load transient response		9
Line transient response		10

TRANSIENT INPUT VOLTAGE vs TIME

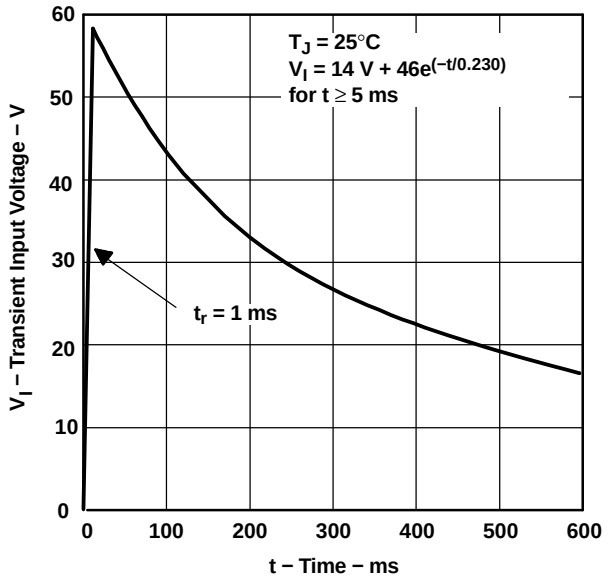

Figure 3.

OUTPUT VOLTAGE vs INPUT VOLTAGE

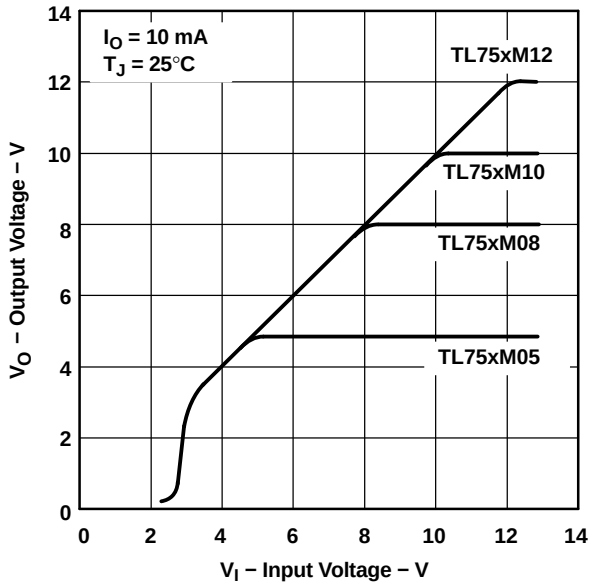

Figure 4.

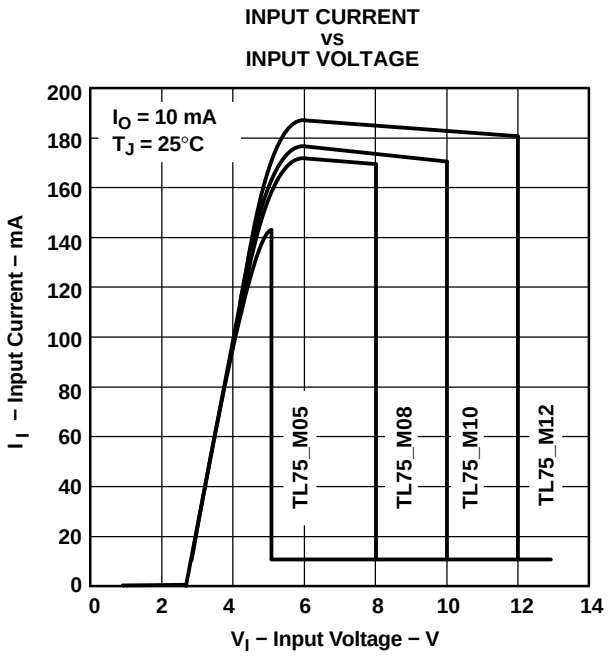

Figure 5.

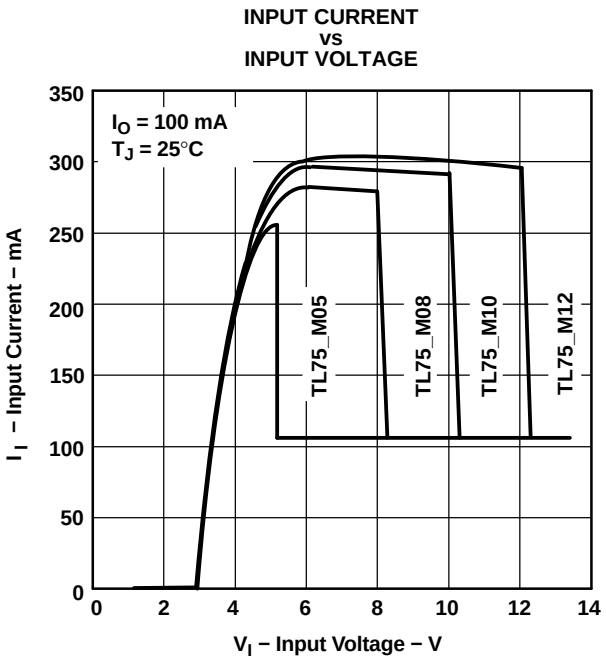

Figure 6.

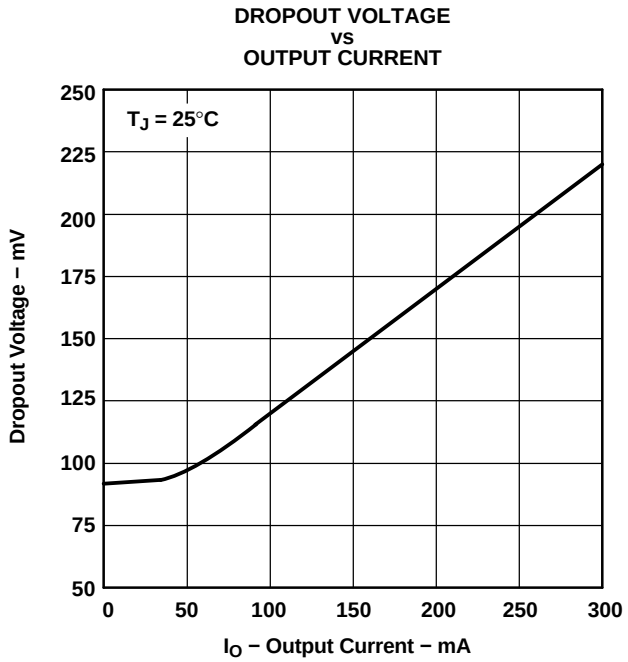

Figure 7.

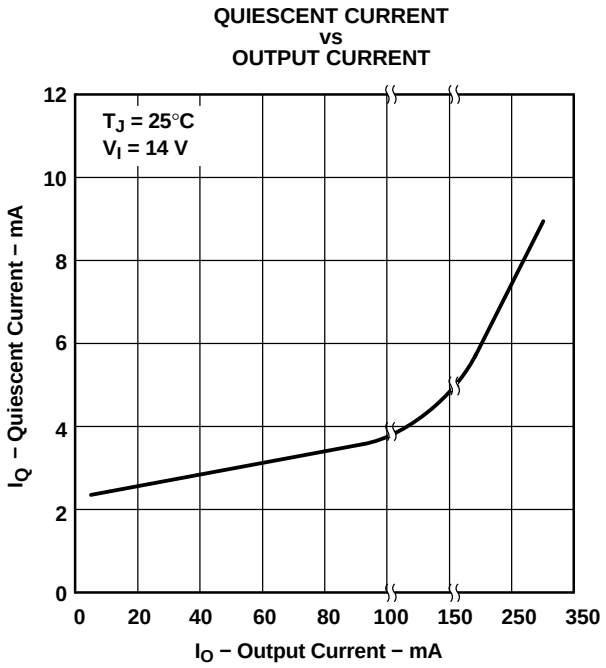

Figure 8.

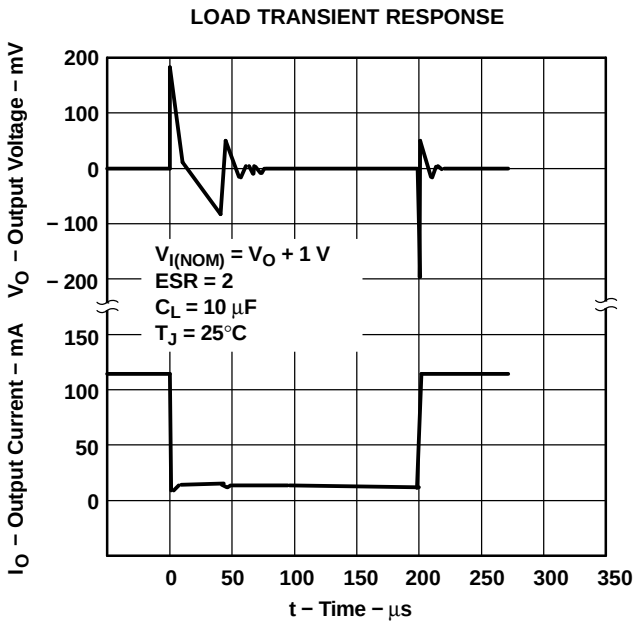

Figure 9.

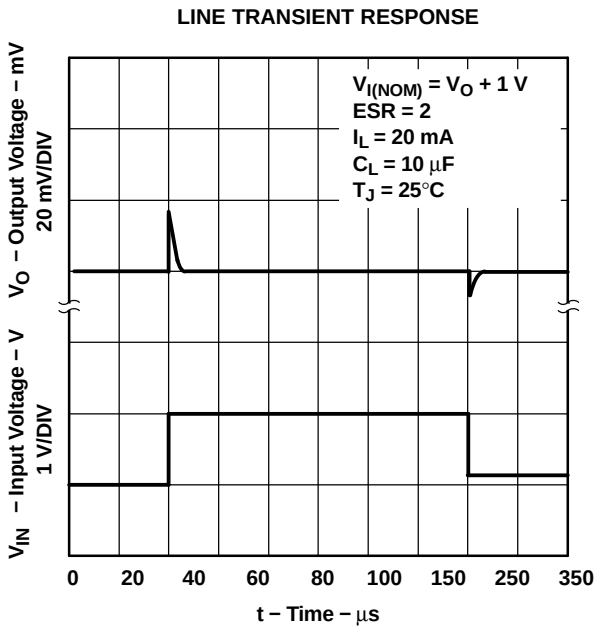

Figure 10.

PACKAGING INFORMATION

Orderable Device	Status [1]	Package Type	Package Drawing	Pins	Package Qty	Eco Plan [2]	Lead/Ball Finish	MSL Peak Temp [3]
TL750M05CKC	NRND	TO-220	KC	3	50	TBD	CU SNPB	N / A for Pkg Type
TL750M05CKCE3	NRND	TO-220	KC	3	50	Pb-Free (RoHS)	CU SN	N / A for Pkg Type
TL750M05CKTER	NRND	PFM	KTE	3	2000	TBD	CU SNPB	Level-1-220C-UNLIM
TL750M05CKTPR	NRND	PFM	KTP	2	3000	TBD	CU SNPB	Level-1-220C-UNLIM
TL750M05CKTPRG3	NRND	PFM	KTP	2	3000	Green (RoHS & no Sb/Br)	CU SN	Level-1-260C-UNLIM
TL750M08CKCE3	NRND	TO-220	KC	3	50	Pb-Free (RoHS)	CU SN	N / A for Pkg Type
TL750M08CKTPRG3	ACTIVE	PFM	KTP	2	3000	Green (RoHS & no Sb/Br)	CU SN	Level-1-260C-UNLIM
TL750M10CKC	NRND	TO-220	KC	3	50	TBD	CU SNPB	N / A for Pkg Type
TL750M10CKCE3	ACTIVE	TO-220	KC	3	50	Pb-Free (RoHS)	CU SN	N / A for Pkg Type
TL750M10CKTER	NRND	PFM	KTE	3	2000	TBD	CU SNPB	Level-1-220C-UNLIM
TL750M10CKTPR	NRND	PFM	KTP	2	3000	TBD	CU SNPB	Level-1-220C-UNLIM
TL750M10CKTPRG3	ACTIVE	PFM	KTP	2	3000	Green (RoHS & no Sb/Br)	CU SN	Level-1-260C-UNLIM
TL750M12CKC	NRND	TO-220	KC	3	50	TBD	CU SNPB	N / A for Pkg Type
TL750M12CKCE3	NRND	TO-220	KC	3	50	Pb-Free (RoHS)	CU SN	N / A for Pkg Type
TL750M12CKTPRG3	ACTIVE	PFM	KTP	2	3000	Green (RoHS & no Sb/Br)	CU SN	Level-1-260C-UNLIM
TL751M05CKTGR	NRND	PFM	KTG	5	2000	TBD	Call TI	Call TI

[1] The marketing status values are defined as follows:
ACTIVE: Product device recommended for new designs.
LIFEBUY: TI has announced that the device will be discontinued, and a lifetime-buy period is in effect.
NRND: Not recommended for new designs. Device is in production to support existing customers, but TI does not recommend using this part in a new design.
PREVIEW: Device has been announced but is not in production. Samples may or may not be available.
OBSOLETE: TI has discontinued the production of the device.

[2] Eco Plan - The planned eco-friendly classification: Pb-Free (RoHS), Pb-Free (RoHS Exempt), or Green (RoHS & no Sb/Br) - please check http://www.ti.com/productcontent for the latest availability information and additional product content details.
TBD: The Pb-Free/Green conversion plan has not been defined.
Pb-Free (RoHS): TI's terms "Lead-Free" or "Pb-Free" mean semiconductor products that are compatible with the current RoHS requirements for all 6 substances, including the requirement that lead not exceed 0.1% by weight in homogeneous materials. Where designed to be soldered at high temperatures, TI Pb-Free products are suitable for use in specified lead-free processes.
Pb-Free (RoHS Exempt): This component has a RoHS exemption for either 1) lead-based flip-chip solder bumps used between the die and package, or 2) lead-based die adhesive used between the die and leadframe. The component is otherwise considered Pb-Free (RoHS compatible) as defined above.
Green (RoHS & no Sb/Br): TI defines "Green" to mean Pb-Free (RoHS compatible), and free of Bromine (Br) and Antimony (Sb) based flame retardants (Br or Sb do not exceed 0.1% by weight in homogeneous material)

[3] MSL, Peak Temp. -- The Moisture Sensitivity Level rating according to the JEDEC industry standard classifications, and peak solder temperature.

incoming materials and chemicals. TI and TI suppliers consider certain information to be proprietary, and thus CAS numbers and other limited information may not be available for release.

In no event shall TI's liability arising out of such information exceed the total purchase price of the TI part(s) at issue in this document sold by TI to Customer on an annual basis.

KTE (R-PSFM-G3) **PowerFLEX™ PLASTIC FLANGE-MOUNT**

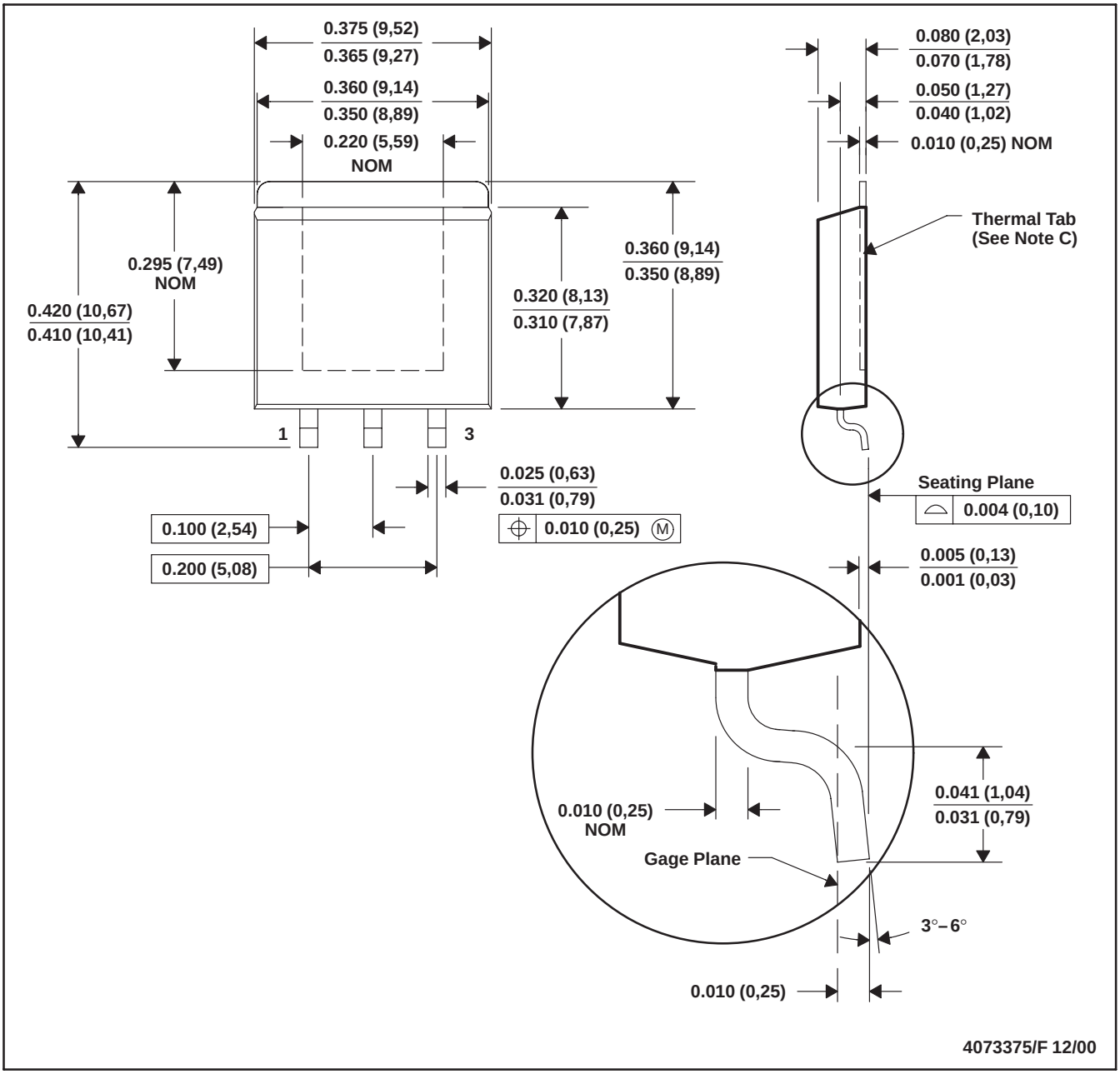

NOTES: A. All linear dimensions are in inches (millimeters).
B. This drawing is subject to change without notice.
C. The center lead is in electrical contact with the thermal tab.
D. Dimensions do not include mold protrusions, not to exceed 0.006 (0,15).
E. Falls within JEDEC MO-169

PowerFLEX is a trademark of Texas Instruments.

KTG (R-PSFM-G5) **PowerFLEX™ PLASTIC FLANGE-MOUNT PACKAGE**

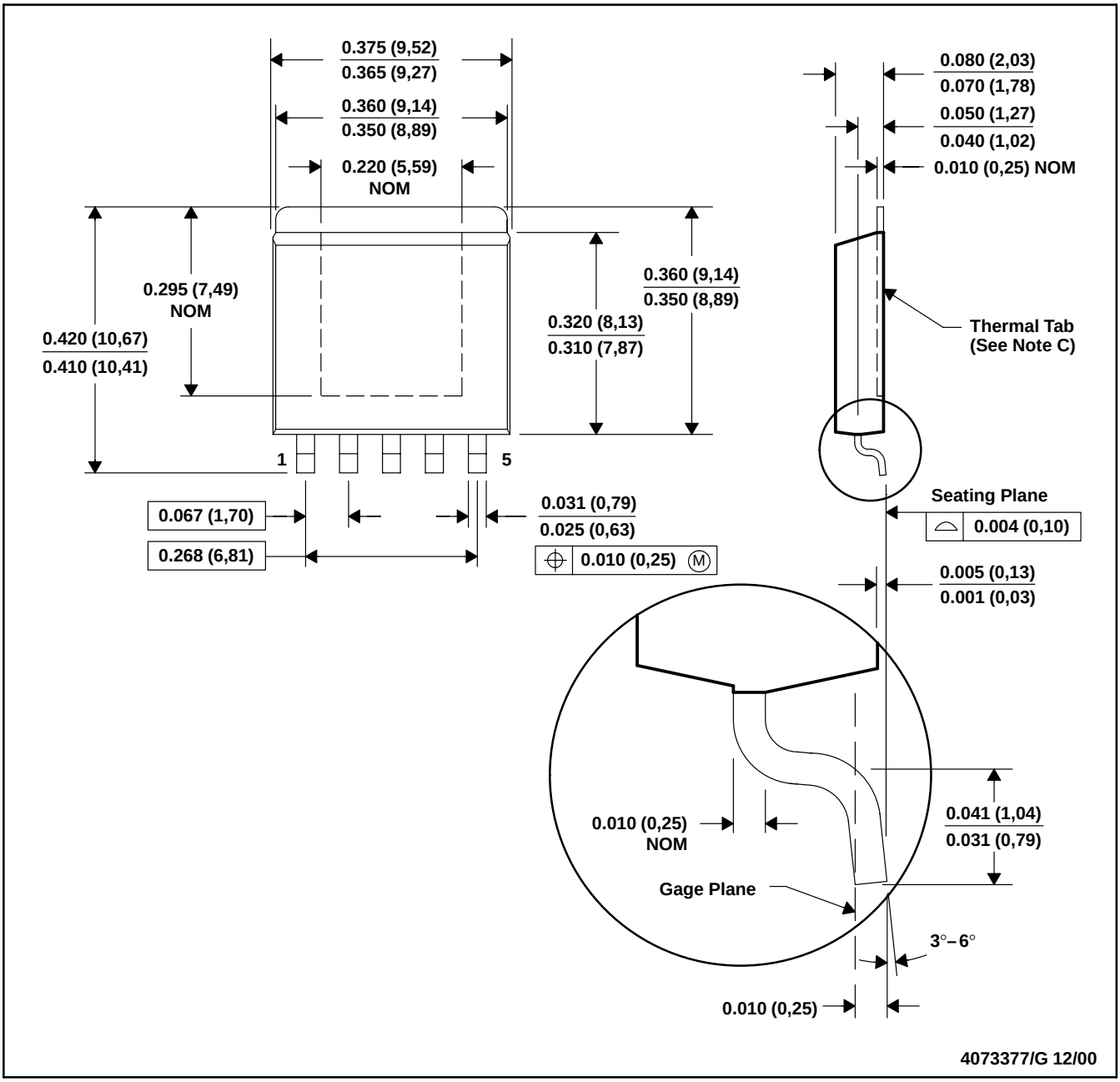

NOTES: A. All linear dimensions are in inches (millimeters).
B. This drawing is subject to change without notice.
C. The center lead is in electrical contact with the thermal tab.
D. Dimensions do not include mold protrusions, not to exceed 0.006 (0,15).
E. FAlls within JEDEC MO–169

PowerFLEX is a trademark of Texas Instruments.

KTP (R-PSFM-G2) **PowerFLEX™ PLASTIC FLANGE-MOUNT PACKAGE**

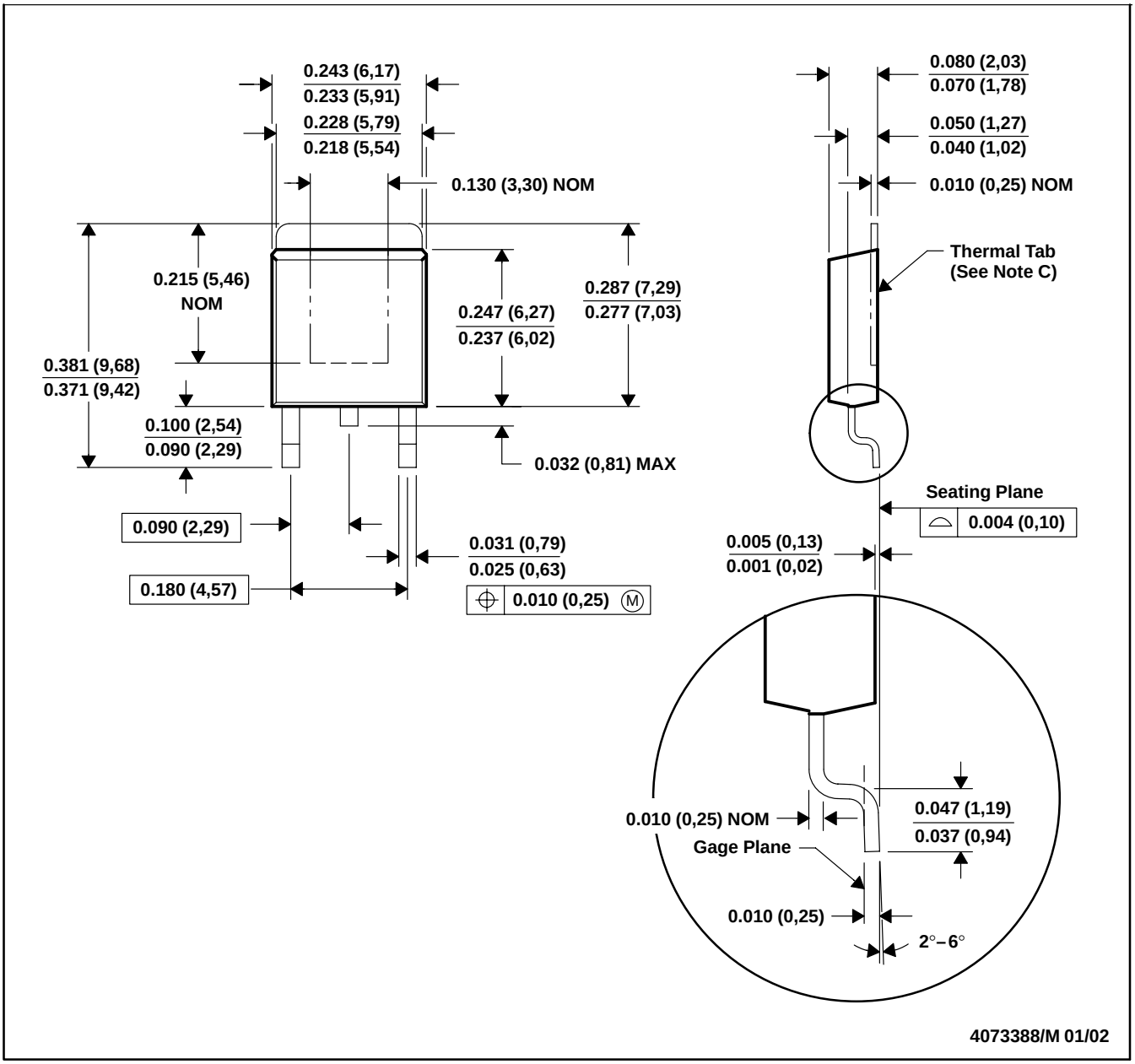

NOTES: A. All linear dimensions are in inches (millimeters).
B. This drawing is subject to change without notice.
C. The center lead is in electrical contact with the thermal tab.
D. Dimensions do not include mold protrusions, not to exceed 0.006 (0,15).
E. Falls within JEDEC TO-252 variation AC.

PowerFLEX is a trademark of Texas Instruments.

KC (R–PSFM–T3) PLASTIC FLANGE–MOUNT PACKAGE

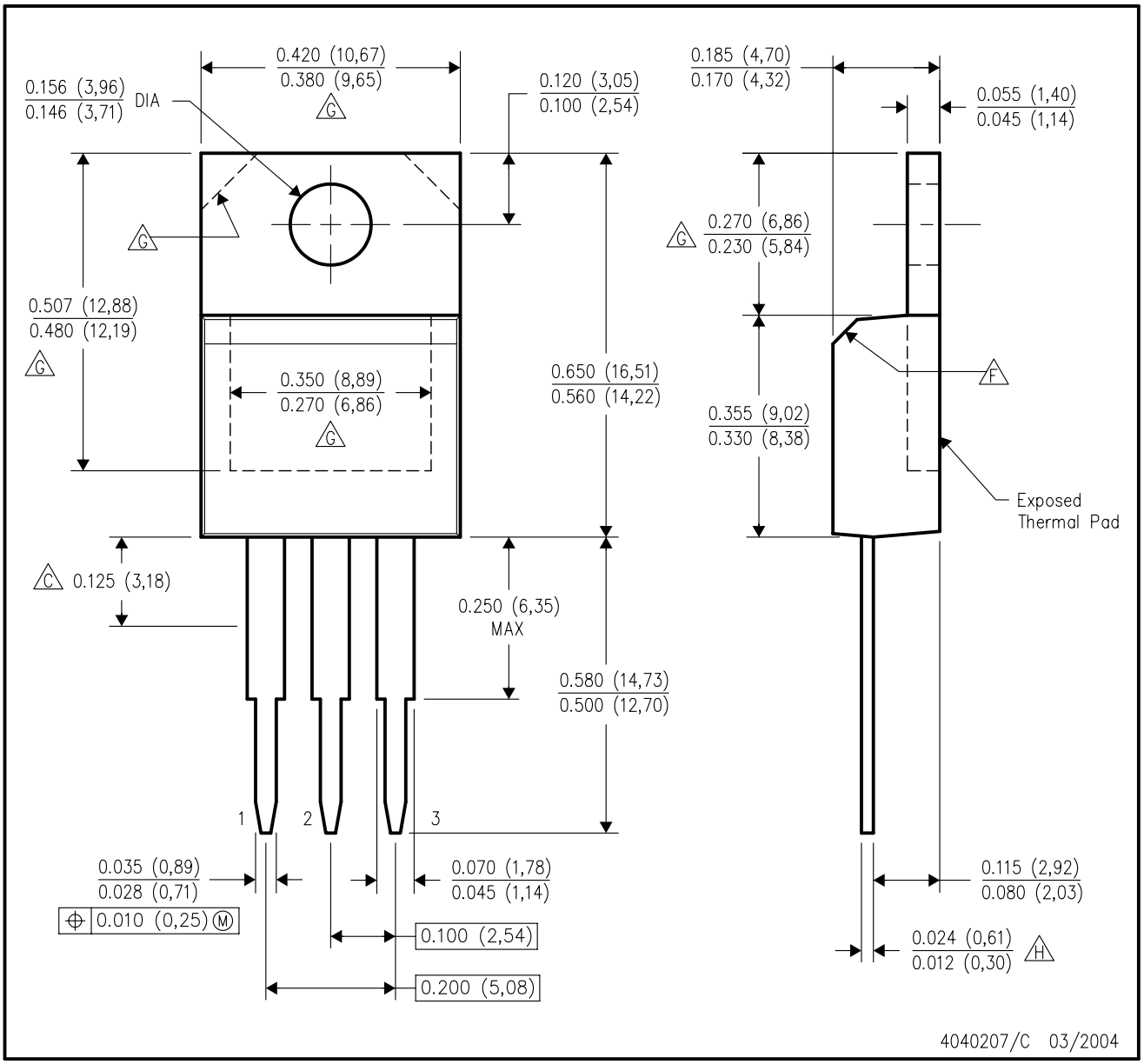

NOTES:
- A. All linear dimensions are in inches (millimeters).
- B. This drawing is subject to change without notice.
- C. Lead dimensions are not controlled within this area.
- D. All lead dimensions apply before solder dip.
- E. The center lead is in electrical contact with the mounting tab.
- F. The chamfer is optional.
- G. Thermal pad contour optional within these dimensions.
- H. Falls within JEDEC TO–220 variation AB, except minimum lead thickness.