查询AD22100供应商 捷多邦，专业PCB打样工厂，24小时加急出货

ANALOG DEVICES

Voltage Output Temperature Sensor with Signal Conditioning

AD22100*

FEATURES

200°C Temperature Span
Accuracy Better than ±2% of Full Scale
Linearity Better than ±1% of Full Scale
Temperature Coefficient of 22.5 mV/°C
Output Proportional to Temperature × V+
Single Supply Operation
Reverse Voltage Protection
Minimal Self Heating
High Level, Low Impedance Output

APPLICATIONS

HVAC Systems
System Temperature Compensation
Board Level Temperature Sensing
Electronic Thermostats

MARKETS

Industrial Process Control
Instrumentation
Automotive

SIMPLIFIED BLOCK DIAGRAM

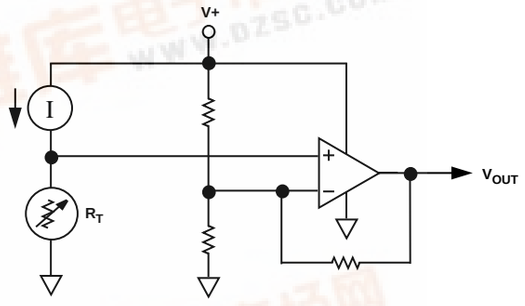

GENERAL DESCRIPTION

The AD22100 is a monolithic temperature sensor with on-chip signal conditioning. It can be operated over the temperature range –50°C to +150°C, making it ideal for use in numerous HVAC, instrumentation and automotive applications.

The signal conditioning eliminates the need for any trimming, buffering or linearization circuitry, greatly simplifying the system design and reducing the overall system cost.

The output voltage is proportional to the temperature times the supply voltage (ratiometric). The output swings from 0.25 V at –50°C to +4.75 V at +150°C using a single +5.0 V supply.

Due to its ratiometric nature, the AD22100 offers a cost effective solution when interfacing to an analog-to-digital converter. This is accomplished by using the ADC's +5 V power supply as a reference to both the ADC and the AD22100 (See Figure 1), eliminating the need for and cost of a precision reference.

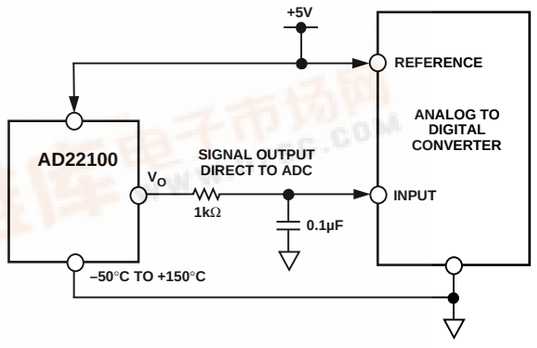

Figure 1. Application Circuit

*Protected by U.S. Patent Nos. 5030849 and 5243319.

REV. B

Information furnished by Analog Devices is believed to be accurate and reliable. However, no responsibility is assumed by Analog Devices for its use, nor for any infringements of patents or other rights of third parties which may result from its use. No license is granted by implication or otherwise under any patent or patent rights of Analog Devices.

© Analog Devices, Inc., 1994

One Technology Way, P.O. Box 9106, Norwood. MA 02062-9106, U.S.A.
Tel: 617/329-4700 Fax: 617/326-8703

pdf.dzsc.com

AD22100–SPECIFICATIONS (T_A = +25°C and V+ = +4 V to +6 V unless otherwise noted)

Parameter	AD22100K Min	AD22100K Typ	AD22100K Max	AD22100A Min	AD22100A Typ	AD22100A Max	AD22100S Min	AD22100S Typ	AD22100S Max	Units
TRANSFER FUNCTION	V_{OUT} = (V+/5 V) × [1.375 V + (22.5 mV/°C) × T_A]									V
TEMPERATURE COEFFICIENT	(V+/5 V) × 22.5									mV/°C
TOTAL ERROR										
Initial Error										
T_A = +25°C		±0.5	±2.0		±1.0	±2.0		±1.0	±2.0	°C
Error over Temperature										
$T_A = T_{MIN}$		±0.75	±2.0		±2.0	±3.7		±3.0	±4.0	°C
$T_A = T_{MAX}$		±0.75	±2.0		±2.0	±3.0		±3.0	±4.0	°C
Nonlinearity										
$T_A = T_{MIN}$ to T_{MAX}			0.5			0.5			1.0	% FS[1]
OUTPUT CHARACTERISTICS										
Nominal Output Voltage										
V+ = 5.0 V, T_A = 0°C		1.375								V
V+ = 5.0 V, T_A = +100°C		3.625								V
V+ = 5.0 V, T_A = –40°C					0.475					V
V+ = 5.0 V, T_A = +85°C					3.288					V
V+ = 5.0 V, T_A = –50°C								0.250		V
V+ = 5.0 V, T_A = +150°C								4.750		V
POWER SUPPLY										
Operating Voltage	+4.0	+5.0	+6.0	+4.0	+5.0	+6.0	+4.0	+5.0	+6.0	V
Quiescent Current		500	650		500	650		500	650	µA
TEMPERATURE RANGE										
Guaranteed Temperature Range	0		+100	–40		+85	–50		+150	°C
Operating Temperature Range	–50		+150	–50		+150	–50		+150	°C
PACKAGE		TO-92 SOIC			TO-92 SOIC			TO-92 SOIC		

Specifications subject to change without notice.

CHIP SPECIFICATIONS (T_A = +25°C and V+ = +5.0 V unless otherwise noted)

Parameter	Min	Typ	Max	Units
TRANSFER FUNCTION	V_{OUT} = (V+/5 V) × [1.375 + 22.5 mV/°C × T_A] V			
TEMPERATURE COEFFICIENT	(V+/5 V) × 22.5			mV/°C
OUTPUT CHARACTERISTICS				
Error				
T_A = +25°C		±0.5	±2.0	°C
Nominal Output Voltage				
T_A = +25°C		1.938		V
POWER SUPPLY				
Operating Voltage	+4.0	+5.0	+6.0	V
Quiescent Current		500	650	µA
TEMPERATURE RANGE				
Guaranteed Temperature Range		25		°C
Operating Temperature Range	–50		+150	°C

NOTES

[1]FS (Full Scale) is defined as that of the operating temperature range, –50°C to +150°C. The listed max specification limit applies to the guaranteed temperature range. For example, the AD22100K has a nonlinearity of (0.5%) × (200°C) = 1°C over the guaranteed temperature range of 0°C to +100°C.

Specifications subject to change without notice.

ABSOLUTE MAXIMUM RATINGS[1]

Supply Voltage . . . . . +10 V
Reversed Continuous Supply Voltage . . . . . –10 V
Operating Temperature . . . . . –50°C to +150°C
Storage Temperature . . . . . –65°C to +160°C
Output Short Circuit to V+ or Ground . . . . . Indefinite
Lead Temperature (Soldering, 10 sec) . . . . . +300°C

[1]Stresses above those listed under "Absolute Maximum Ratings" may cause permanent damage to the device. This is a stress rating only; the functional operation of the device at these or any other conditions above those indicated in the operation sections of this specification is not implied. Exposure to absolute maximum rating conditions for extended periods may affect device reliability.

ORDERING GUIDE

Model/Grade	Guaranteed Temperature Range	Package Description*	Package Option
AD22100 KT	0°C to 100°C	TO-92	TO-92
AD22100 KR	0°C to 100°C	SOIC	SO-8
AD22100 AT	–40°C to +85°C	TO-92	TO-92
AD22100 AR	–40°C to +85°C	SOIC	SO-8
AD22100 ST	–50°C to +150°C	TO-92	TO-92
AD22100 SR	–50°C to +150°C	SOIC	SO-8
AD22100KChips	+25°C	N/A	N/A

*Minimum purchase quantities of 100 pieces for all chip orders.

PIN DESCRIPTION

Mnemonic	Function
V+	Power Supply Input
V_O	Device Output
GND	Ground Pin must be connected to 0 V.
NC	No Connect

PIN CONFIGURATIONS
TO-92

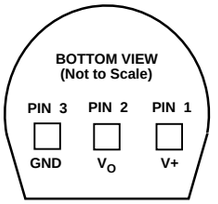

SOIC

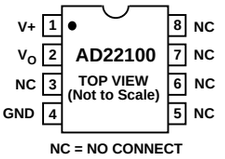

CAUTION

ESD (electrostatic discharge) sensitive device. Electrostatic charges as high as 4000 V readily accumulate on the human body and test equipment and can discharge without detection. Although the AD22100 features proprietary ESD protection circuitry, permanent damage may occur on devices subjected to high energy electrostatic discharges. Therefore, proper ESD precautions are recommended to avoid performance degradation or loss of functionality.

Typical Performance Curves

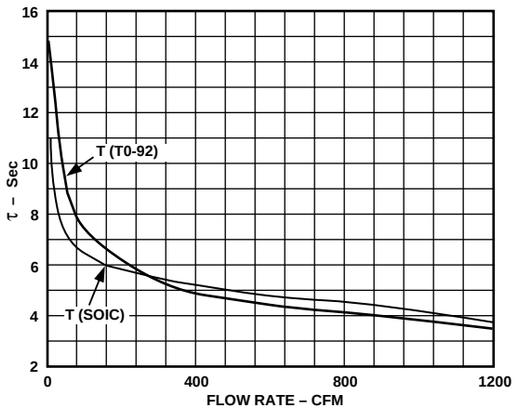

Figure 2. Thermal Response vs. Flow Rate

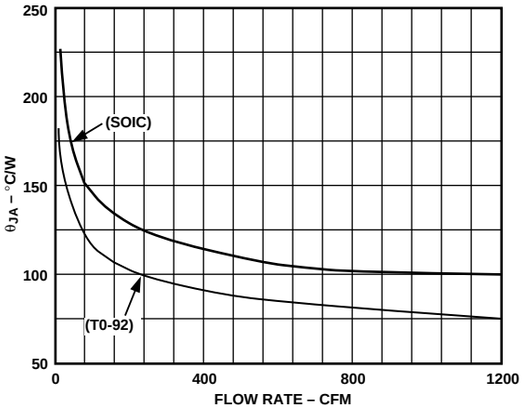

Figure 3. Thermal Resistance vs. Flow Rate

THEORY OF OPERATION

The AD22100 is a ratiometric temperature sensor IC whose output voltage is proportional to power supply voltage. The heart of the sensor is a proprietary temperature-dependent resistor, similar to an RTD, which is built into the IC. Figure 4 shows a simplified block diagram of the AD22100.

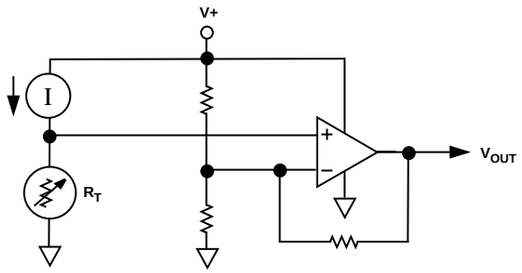

Figure 4. Simplified Block Diagram

The temperature-dependent resistor, labeled R_T, exhibits a change in resistance that is nearly linearly proportional to temperature. This resistor is excited with a current source that is proportional to power supply voltage. The resulting voltage across R_T is therefore both supply voltage proportional and linearly varying with temperature. The remainder of the AD22100 consists of an op amp signal conditioning block that takes the voltage across R_T and applies the proper gain and offset to achieve the following output voltage function:

$$V_{OUT} = (V{+}/5\ V) \times [1.375\ V + (22.5\ mV/°C) \times T_A]$$

ABSOLUTE ACCURACY AND NONLINEARITY SPECIFICATIONS

Figure 5 graphically depicts the guaranteed limits of accuracy for the AD22100 and shows the performance of a typical part. As the output is very linear, the major sources of error are offset, i.e., error at room temperature, and span error, i.e., deviation from the theoretical 22.5 mV/°C. Demanding applications can achieve improved performance by calibrating these offset and gain errors so that only the residual nonlinearity remains as a significant source of error.

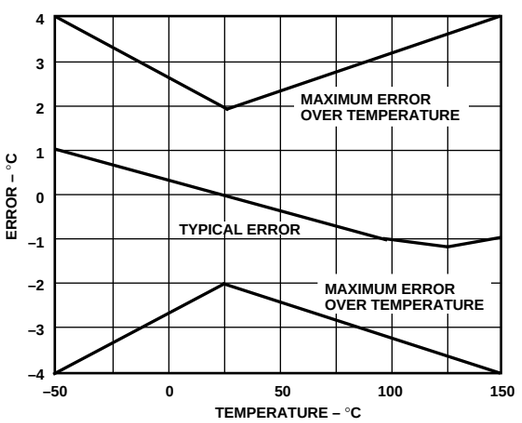

Figure 5. Typical AD22100 Performance

OUTPUT STAGE CONSIDERATIONS

As previously stated, the AD22100 is a voltage output device. A basic understanding of the nature of its output stage is useful for proper application. Note that at the nominal supply voltage of 5.0 V, the output voltage extends from 0.25 V at –50°C to +4.75 V at +150°C. Furthermore, the AD22100 output pin is capable of withstanding an indefinite short circuit to either ground or the power supply. These characteristics are provided by the output stage structure shown in Figure 6.

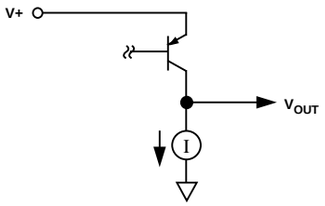

Figure 6. Output Stage Structure

The active portion of the output stage is a PNP transistor with its emitter connected to the V+ supply and collector connected to the output node. This PNP transistor sources the required amount of output current. A limited pull-down capability is provided by a fixed current sink of about –80 µA. (Here, "fixed" means the current sink is fairly insensitive to either supply voltage or output loading conditions. The current sink capability is a function of temperature, increasing its pull-down capability at lower temperatures.)

Due to its limited current sinking ability, the AD22100 is incapable of driving loads to the V+ power supply and is instead intended to drive grounded loads. A typical value for short circuit current limit is 7 mA, so devices can reliably source 1 mA or 2 mA. However, for best output voltage accuracy and minimal internal self-heating, output current should be kept below 1 mA. Loads connected to the V+ power supply should be avoided as the current sinking capability of the AD22100 is fairly limited. These considerations are typically not a problem when driving a microcontroller analog to digital converter input pin (see MICROPROCESSOR A/D INTERFACE ISSUES).

RATIOMETRICITY CONSIDERATIONS

The AD22100 will operate with slightly better accuracy than that listed in the data sheet specifications if the power supply is held constant. This is because the AD22100's output voltage varies with both temperature and supply voltage, with some errors. The ideal transfer function describing the output voltage is:

$$(V{+}/5\ V) \times [1.375\ V + (22.5\ mV/°C) \times T_A]$$

The ratiometricity error is defined as the percent change away from the ideal transfer function as the power supply voltage changes within the operating range of +4 V to +6 V. For the AD22100 this error is typically less than 1%. A movement from the ideal transfer function by 1% at +25°C, with a supply voltage varying from 5.0 V to 5.50 V, results in a 1.94 mV change in output voltage or 0.08°C error. This error term is greater at higher temperatures because the output (and error term) is directly proportional to temperature. At 150°C, the error in output voltage is 4.75 mV or 0.19°C.

For example, with V_S = 5.0 V, and T_A = +25°C, the nominal output of the AD22100 will be 1.9375 V. At V_S = 5.50 V, the nominal output will be 2.1313 V, an increase of 193.75 mV. A proportionality error of 1% is applied to the 193.75 mV, yielding an error term of 1.9375 mV. This error term translates to a variation in output voltage of 2.1293 V to 2.3332 V. A 1.94 mV error at the output is equivalent to about 0.08°C error in accuracy.

If we substitute 150°C for 25°C in the above example, then the error term translates to a variation in output voltage of 5.2203 V to 5.2298 V. A 4.75 mV error at the output is equivalent to about 0.19°C error in accuracy.

MOUNTING CONSIDERATIONS

If the AD22100 is thermally attached and properly protected, it can be used in any measuring situation where the maximum range of temperatures encountered is between –50°C and +150°C. Because plastic IC packaging technology is employed, excessive mechanical stress must be avoided when fastening the device with a clamp or screw-on heat tab. Thermally conductive epoxy or glue is recommended for typical mounting conditions. In wet or corrosive environments, an electrically isolated metal or ceramic well should be used to shield the AD22100. Because the part has a voltage output (as opposed to current), it offers modest immunity to leakage errors, such as those caused by condensation at low temperatures.

THERMAL ENVIRONMENT EFFECTS

The thermal environment in which the AD22100 is used determines two performance traits: the effect of self-heating on accuracy and the response time of the sensor to rapid changes in temperature. In the first case, a rise in the IC junction temperature above the ambient temperature is a function of two variables; the power consumption of the AD22100 and the thermal resistance between the chip and the ambient environment θ_{JA}. Self-heating error in °C can be derived by multiplying the power dissipation by θ_{JA}. Because errors of this type can vary widely for surroundings with different heat sinking capacities, it is necessary to specify θ_{JA} under several conditions. Table I shows how the magnitude of self-heating error varies relative to the environment. A typical part will dissipate about 2.2 mW at room temperature with a 5 V supply and negligible output loading. In still air, without a "heat sink," the table below indicates a θ_{JA} of 190°C/W, yielding a temperature rise of 0.4°C. Thermal rise will be considerably less in either moving air or with direct physical connection to a solid (or liquid) body.

Table I. Thermal Resistance (TO-92)

Medium	θ_{JA} (°C/Watt)	τ (sec) *
Aluminum Block	60	2
Moving Air**		
Without Heat Sink	75	3.5
Still Air		
Without Heat Sink	190	15

*The time constant τ is defined as the time to reach 63.2% of the final temperature change.
**1200 CFM.

Response of the AD22100 output to abrupt changes in ambient temperature can be modeled by a single time constant τ exponential function. Figure 7 shows typical response time plots for a few media of interest.

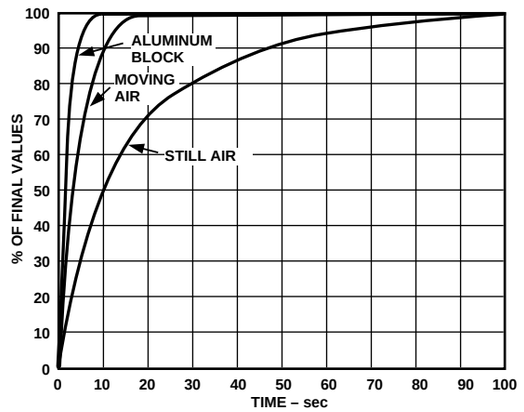

Figure 7. Response Time

The time constant τ is dependent on θ_{JA} and the thermal capacities of the chip and the package. Table I lists the effective τ (time to reach 63.2% of the final value) for a few different media. Copper printed circuit board connections were neglected in the analysis; however, they will sink or conduct heat directly through the AD22100's solder plated copper leads. When faster response is required, a thermally conductive grease or glue between the AD22100 and the surface temperature being measured should be used.

MICROPROCESSOR A/D INTERFACE ISSUES

The AD22100 is especially well suited to providing a low cost temperature measurement capability for microprocessor/microcontroller based systems. Many inexpensive 8-bit microprocessors now offer an onboard 8-bit ADC capability at a modest cost premium. Total "cost of ownership" then becomes a function of the voltage reference and analog signal conditioning necessary to mate the analog sensor with the microprocessor ADC. The AD22100 can provide an ideal low cost system by eliminating the need for a precision voltage reference and any additional active components. The ratiometric nature of the AD22100 allows the microprocessor to use the same power supply as its ADC reference. Variations of hundreds of millivolts in the supply voltage have little effect as both the AD22100 and the ADC use the supply as their reference. The nominal AD22100 signal range of 0.25 V to 4.75 V (–50°C to +150°C) makes good use of the input range of a 0 V to 5 V ADC. A single resistor and capacitor are recommended to provide immunity to the high speed charge dump glitches seen at many microprocessor ADC inputs (see Figure 1).

An 8-bit ADC with a reference of 5 V will have a least significant bit (LSB) size of 5 V/256 = 19.5 mV. This corresponds to a nominal resolution of about 0.87°C.

USE WITH A PRECISION REFERENCE AS THE SUPPLY VOLTAGE

While the ratiometric nature of the AD22100 allows for system operation without a precision voltage reference, it can still be used in such systems. Overall system requirements involving other sensors or signal inputs may dictate the need for a fixed precision ADC reference. The AD22100 can be converted to absolute voltage operation by using a precision reference as the supply voltage. For example, a 5.00 V reference can be used to power the AD22100 directly. Supply current will typically be 500 µA which is usually within the output capability of the reference. A large number of AD22100s may require an additional op amp buffer, as would scaling down a 10.00 V reference that might be found in "instrumentation" ADCs typically operating from ±15 V supplies.

OUTLINE DIMENSIONS

Dimensions shown in inches and (mm).

TO-92

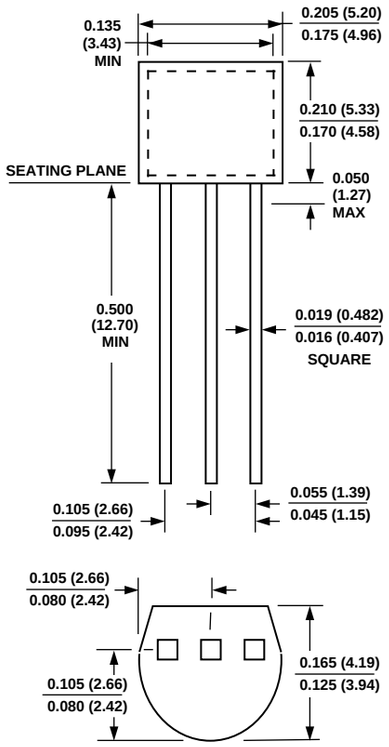

SO-8 (SOIC)

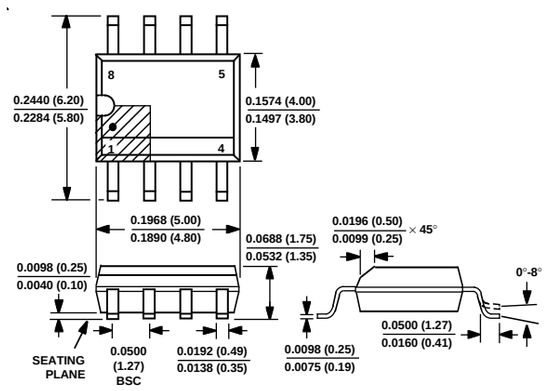

C1898b–9–12/94

PRINTED IN U.S.A.