查询ADT7301供应商 捷多邦，专业PCB打样工厂，24小时加急出货

13-Bit, ±0.5°C Accurate, MicroPower Digital Temperature Sensor in 6-Lead SOT-23

Preliminary Technical Data

ADT7301

FEATURES

13-bit temperature-to-digital converter
−40°C to +150°C operating temperature range
±0.5°C typical accuracy
0.03125°C temperature resolution
Shutdown current of 1 µA
Power dissipation of 0.631 mW at V_{DD} = 3.3 V
SPI- and DSP-compatible serial interface
Shutdown mode
Space-saving SOT-23 and MSOP packages

APPLICATIONS

Medical equipment
Automotive:
- **Environmental controls**
- **Oil temperature**
- **Hydraulic systems**

Cell phones
Hard disk drives
Personal computers
Electronic test equipment
Office equipment
Domestic appliances
Process control

FUNCTIONAL BLOCK DIAGRAM

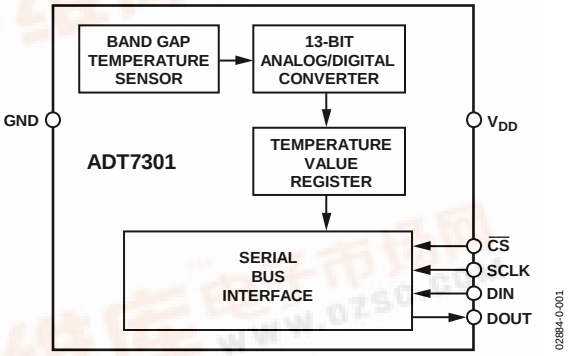

Figure 1. Functional Block Diagram

GENERAL DESCRIPTION

The ADT7301 is a complete temperature monitoring system available in SOT-23 and MSOP packages. It contains a band gap temperature sensor and a 13-bit ADC to monitor and digitize the temperature reading to a resolution of 0.03125°C.

The ADT7301 has a flexible serial interface that allows easy interfacing to most microcontrollers. The interface is compatible with SPI®, QSPI™, and MICROWIRE™ protocols as well as DSPs. The part features a standby mode that is controlled via the serial interface. The ADT7301's wide supply voltage range, low supply current, and SPI compatible interface make it ideal for a variety of applications, including personal computers, office equipment, automotive, and domestic appliances. The ADT7301 is rated for operation over the -40°C to +150°C temperature range. It is not recommended to operate the device at temperatures above +125°C for greater than a total of 5% (5,000 hours) of the lifetime of the device. Any exposure beyond this limit will affect device reliability.

PRODUCT HIGHLIGHTS

1. The ADT7301 has an on-chip temperature sensor that allows an accurate measurement of the ambient temperature. The measurable temperature range is −40°C to +150°C.
2. Supply voltage of 2.7 V to 5.5 V.
3. Space-saving 6-lead SOT-23 and 8-lead MSOP packages.
4. Temperature accuracy of ±0.5°C.
5. 13-bit temperature reading to 0.03125°C resolution.
6. The ADT7301 features a shutdown mode that reduces the power consumption to 4.88 µW with V_{DD} = 3.3 V @ 1 SPS.

Rev. PrJ

Information furnished by Analog Devices is believed to be accurate and reliable. However, no responsibility is assumed by Analog Devices for its use, nor for any infringements of patents or other rights of third parties that may result from its use. Specifications subject to change without notice. No license is granted by implication or otherwise under any patent or patent rights of Analog Devices. Trademarks and registered trademarks are the property of their respective owners.

One Technology Way, P.O. Box 9106, Norwood, MA 02062-9106, U.S.A.
Tel: 781.329.4700 www.analog.com
Fax: 781.326.8703 © 2004 Analog Devices, Inc. All rights reserved.

TABLE OF CONTENTS

Specifications 3
Timing Characteristics 4
Absolute Maximum Ratings 5
ESD Caution 5
Pin Configurations and Function Descriptions 6
Typical Performance Characteristics 7
Circuit Information 8
Converter Details 8
Temperature Value Register 8
Serial Interface 9
Microprocessor Interfacing 10
Mounting The ADT7302 12
Supply Decoupling 12
Outline Dimensions 13
Ordering Guide 14

REVISION HISTORY

Revision PrE: Preliminary Version

SPECIFICATIONS

$T_A = T_{MIN}$ to T_{MAX}, V_{DD} = 2.7 V to 5.5 V, unless otherwise noted. All specifications apply for –40°C to +150°C, unless otherwise stated

Table 1. A Grade Specifications

Parameter	Min	Typ	Max	Unit	Test Conditions/Comments
TEMPERATURE SENSOR AND ADC					V_{DD} = +3.3 V (±10%) and 5 V (±10%)
Accuracy		TBD	±1	°C	T_A = 0°C to 70°C.
		TBD	±2	°C	T_A = –20°C to +85°C.
		TBD	±3	°C	T_A = –40°C to +125°C.
		TBD	±4[1]	°C	T_A = –40°C to +150°C.
Temperature Resolution		0.03125		°C	
Auto Conversion Update Rate, t_R		1		sec	Temperature measurement every 1 second
Temperature Conversion Time		2		ms	
Thermal Time Constant[2]		2		sec	
SUPPLIES					
Supply Voltage	2.7		5.5	V	For Specified Performance
Supply Current					
Normal Mode		1.6	2.2	mA	V_{DD} = 3.3 V. Powered up and converting
		190	300	µA	V_{DD} = 3.3 V. Powered up and not converting
		1.6	2.2	mA	V_{DD} = 5 V. Powered up and converting
		280	400	µA	V_{DD} = 5 V. Powered up and not converting
Shutdown Mode		0.2	1	µA	V_{DD} = 3.3 V.
		0.2	1	µA	V_{DD} = 5 V.
Power Dissipation					
Normal Mode (Average)		631		µW	V_{DD} = 3.3 V. Auto conversion update, t_R.
		1.41		mW	V_{DD} = +5 V. Auto conversion update, t_R.
Shutdown Mode (Average)[3]					
1 sps		4.88		µW	V_{DD} = 3.3 V
		7.4		µW	V_{DD} = 5 V
10 sps		42.9		µW	V_{DD} = 3.3 V
		65		µW	V_{DD} = 5 V
100 sps		423		µW	V_{DD} = 3.3 V
		641		µW	V_{DD} = 5 V
DIGITAL INPUT[4]					
Input High Voltage, V_{IH}	2.5			V	
Input Low Voltage, V_{IL}			0.8	V	
Input Current, I_{IN}			±1	µA	V_{IN} = 0 V to V_{DD}
Input Capacitance, C_{IN}			10	pF	All digital inputs
DIGITAL OUTPUT[5]					
Output High Voltage, V_{OH}	V_{DD} – 0.3 V				I_{SOURCE} = I_{SINK} = 200 µA
Output Low Voltage, V_{OL}			0.4	V	I_{OL} = 200 µA
Output Capacitance, C_{OUT}			50	pF	

[1] It is not recommended to operate the device at temperatures above +125°C for greater than a total of 5% (5,000 hours) of the lifetime of the device. Any exposure beyond this limit will affect device reliability.
[2] Thermal Time Constant is the time it takes for a starting temperature difference to change to 36.8% of it's starting value. For example if the ADT7301 experienced a thermal shock from 0°C to 100°C, it would take typically 2 secs for the ADT7301 to reach 63.2°C.
[3] The ADT7301 is taken out of shutdown mode and a temperature conversion is immediately performed after this write operation. Once the temperature conversion is complete the ADT7301 is put back into shutdown mode.
[4] Guaranteed by design and characterization, not production tested.
[5] Guaranteed by design and characterization, not production tested.
Specifications subject to change without notice

TIMING CHARACTERISTICS

Guaranteed by design and characterization, not production tested. All input signals are specified with tr = tf = 5 ns (10% to 90% of V_{DD}) and timed from a voltage level of 1.6 V.

$T_A = T_{MIN}$ to T_{MAX}, V_{DD} = 2.7 V to 5.5 V, unless otherwise noted.

Table 2.

Parameter[1]	Limit	Unit	Comments
t_1	5	ns min	$\overline{CS}$ to SCLK Setup Time
t_2	25	ns min	SCLK High Pulse Width
t_3	25	ns min	SCLK Low Pulse Width
t_4 [2]	35	ns max	Data Access Time after SCLK Falling Edge
t_5	20	ns min	Data Setup Time prior to SCLK Rising Edge
t_6	5	ns min	Data Hold Time after SCLK Rising Edge
t_7	5	ns min	$\overline{CS}$ to SCLK Hold Time
t_8[2]	40	ns max	$\overline{CS}$ to DOUT High Impedance

[1] See Figure 13. for SPI Timing diagram.
[2] Measured with the load circuit of Figure 2

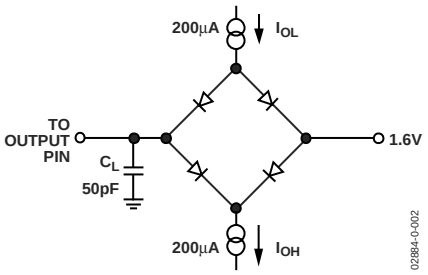

Figure 2. Load Circuit for Data Access Time and Bus Relinquish Time

ABSOLUTE MAXIMUM RATINGS

Table 3. ADT7301 Stress Ratings

Parameter	Rating
V_{DD} to GND	−0.3 V to +7 V
Digital Input Voltage to GND	−0.3 V to V_{DD} + 0.3 V
Digital Output Voltage to GND	−0.3 V to V_{DD} + 0.3 V
Operating Temperature Range[1]	−40°C to +150°C
Storage Temperature Range	−65°C to +150°C
Junction Temperature	+150°C
6-Lead SOT-23 (RJ-6)	
Power Dissipation[2]	$W_{MAX} = (T_{JMAX} - T_A{}^3)/\theta_{JA}$
Thermal Impedance	
θ_{JA}, Junction-to-Ambient (still air)	190.4°C/W
8-Lead MSOP (RM-8)	
Power Dissipation[2]	$W_{MAX} = (T_{JMAX} - T_A{}^{3)}/\theta_{JA}$
Thermal Impedance[4]	
θ_{JA}, Junction-to-Ambient (still air)	205.9°C/W
θ_{JC}, Junction-to-Case	43.74°C/W
IR Reflow Soldering	
Peak Temperature	+220°C (−0/+5°C)
Time at Peak Temperature	10 s to 20 s
Ramp-up Rate	2°C/s to 3°C/s
Ramp-down Rate	−6°C/sec

[1]It is not recommended to operate the ADT7301 at temperatures above 125°C for greater than a total of 5% of the lifetime of the device. Any exposure beyond this limit will affect device reliability.
[2]Values relate to package being used on a standard 2-layer PCB. Reference Figure 3 for a plot of maximum power dissipation versus ambient temperature (T_A).
[3]T_A = ambient temperature
[4]Junction-to-case resistance is applicable to components featuring a preferential flow direction, e.g., components mounted on a heat sink. Junction-to-ambient resistance is more useful for air-cooled, PCB mounted components.

Stresses above those listed under Absolute Maximum Ratings may cause permanent damage to the device. This is a stress rating only; functional operation of the device at these or any other conditions above those indicated in the operational section of this specification is not implied. Exposure to absolute maximum rating conditions for extended periods may affect device reliability

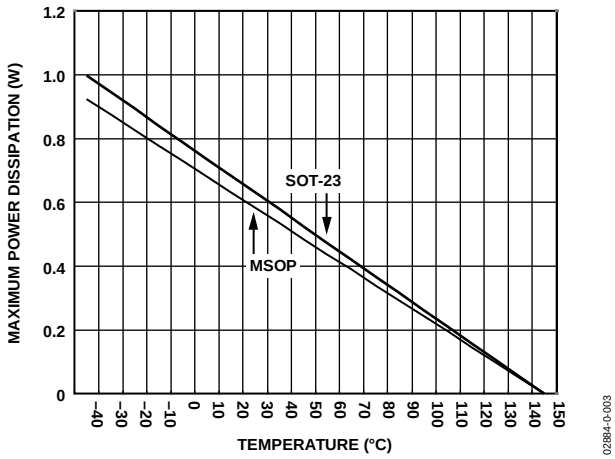

Figure 3. Plot of Maximum Power Dissipation vs. Temperature

ESD CAUTION

ESD (electrostatic discharge) sensitive device. Electrostatic charges as high as 4000 V readily accumulate on the human body and test equipment and can discharge without detection. Although this product features proprietary ESD protection circuitry, permanent damage may occur on devices subjected to high energy electrostatic discharges. Therefore, proper ESD precautions are recommended to avoid performance degradation or loss of functionality.

PIN CONFIGURATIONS AND FUNCTION DESCRIPTIONS

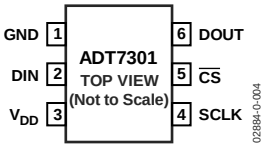

Figure 4. SOT-23

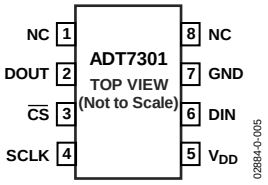

Figure 5. MSOP

Table 4. Pin Function Description

Mnemonic	SOT-23 Pin No.	Description
GND	1	Analog and Digital Ground.
DIN	2	Serial Data Input. Serial data to be loaded to the part's control register is provided on this input. Data is clocked into the control register on the rising edge of SCLK.
V_{DD}	3	Positive Supply Voltage, 2.7 V to 5.5 V.
SCLK	4	Serial Clock Input. This is the clock input for the serial port. The serial clock is used to clock data out of the ADT7301's temperature value register and to clock data into the ADT7301's control register.
$\overline{CS}$	5	Chip Select Input. Logic input. The device is selected when this input is low. The SCLK input is disabled when this pin is high.
DOUT	6	Serial Data Output. Logic output. Data is clocked out of the temperature value register at this pin. Data is clocked out on the falling edge of SCLK.

TYPICAL PERFORMANCE CHARACTERISTICS

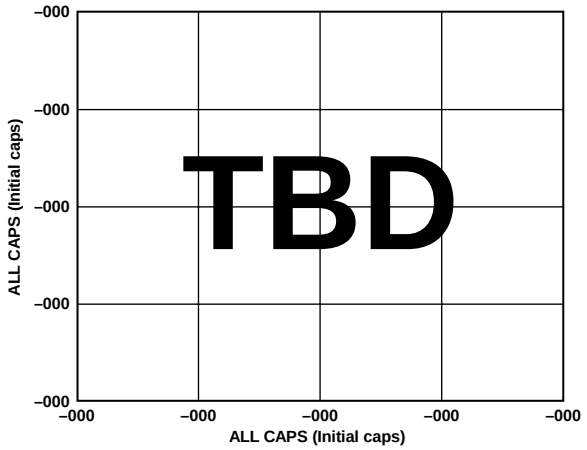

Figure 6. Temperature Accuracy @ 3.3 V and 5 V

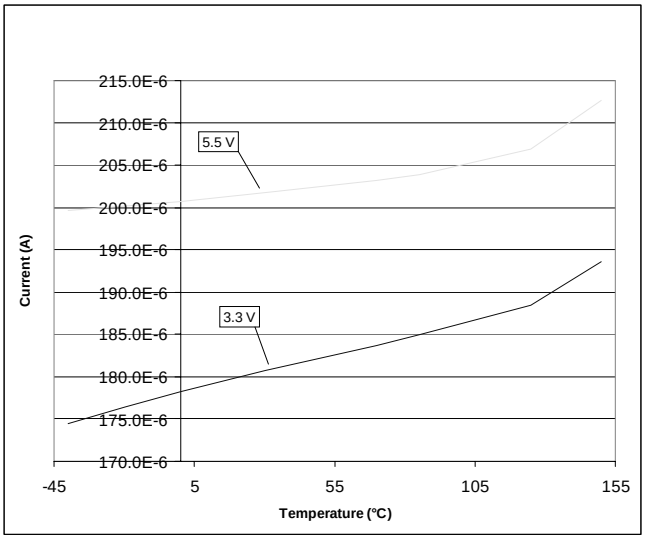

Figure 7.Average Operating Supply Current vs. Temperature

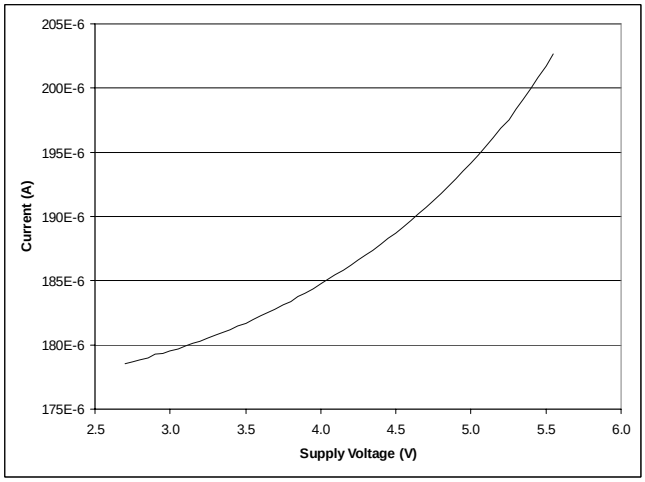

Figure 8. Average Operating Supply Current vs. Supply Voltage @ 30°C

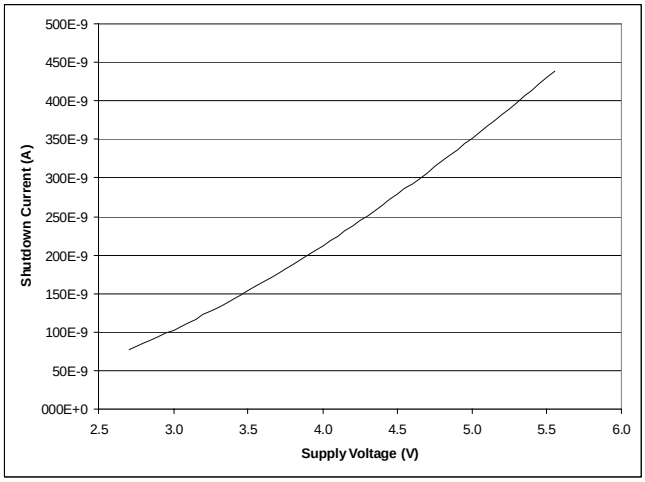

Figure 9. Shutdown Current vs. Supply Voltage @ 30°C

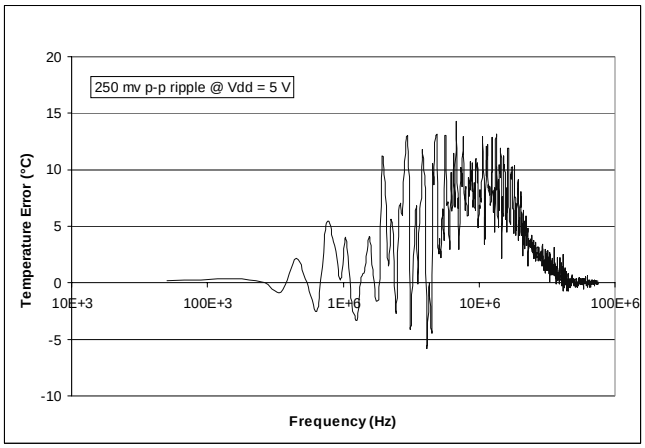

Figure 10. Temperature Accuracy vs. Supply Ripple Frequency

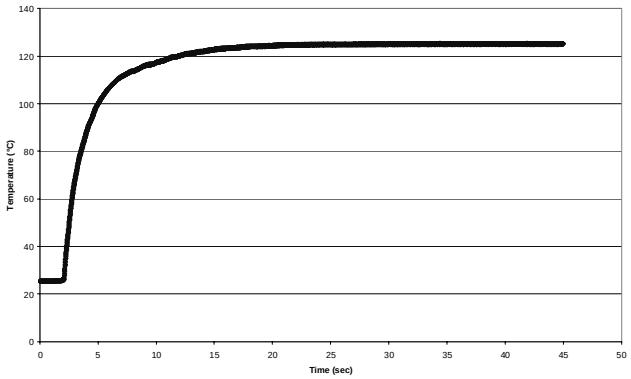

Figure 11. Response to Thermal Shock

CIRCUIT INFORMATION

The ADT7301 is a 13-bit digital temperature sensor with a 14th bit that acts as a sign bit. The part houses an on-chip temperature sensor, a 13-bit A/D converter, a reference circuit, and serial interface logic functions in SOT-23 and MSOP packages. The A/D converter section consists of a conventional successive-approximation converter based around a capacitor DAC. The parts are capable of running on a 2.7 V to 5.5 V power supply.

The on-chip temperature sensor allows an accurate measurement of the ambient device temperature to be made. The specified measurement range of the ADT7301 is −40°C to +150°C. At +150°C, the ADT7301 is limited to 5% of its +55°C operational lifetime. The structural integrity of the device starts to deteriorate when operated at voltage and temperature maximum specifications.

CONVERTER DETAILS

The conversion clock for the part is internally generated. No external clock is required except when reading from and writing to the serial port. In normal mode, an internal clock oscillator runs an automatic conversion sequence. During this automatic conversion sequence, a conversion is initiated every 1 second. At this time, the part powers up its analog circuitry and performs a temperature conversion. This temperature conversion typically takes 800 µs, after which time the analog circuitry of the part automatically shuts down. The analog circuitry powers up again when the 1 second timer times out and the next conversion begins. The result of the most recent temperature conversion is always available in the serial output register because the serial interface circuitry never shuts down.

The ADT7301 can be placed in a shutdown mode via the control register, in which case the on-chip oscillator is shut down and no further conversions are initiated until the ADT7301 is taken out of shutdown mode. The ADT7301 can be taken out of shutdown mode by writing all zeros into the control register. The conversion result from the last conversion prior to shutdown can still be read from the ADT7301 even when it is in shutdown mode.

In normal conversion mode, the internal clock oscillator is reset after every read or write operation. This causes the device to start a temperature conversion, the result of which is typically available 800 µs later. Similarly, when the part is taken out of shutdown mode, the internal clock oscillator is started and a conversion is initiated. The conversion result is available 800 µs later, typically. Reading from the device before a conversion is complete causes the ADT7301 to stop converting; the part starts again when serial communication is finished. This read operation provides the previous result.

TEMPERATURE VALUE REGISTER

The temperature value register is a 14-bit read-only register that stores the temperature reading from the ADC in 13-bit twos complement format plus a sign bit. The MSB (DB13) is the sign bit. The ADC can theoretically measure a 255°C temperature span. The internal temperature sensor is guaranteed to a low value limit of −40°C and a high limit of +150°C. The temperature data format is shown in Table 5, which shows the temperature measurement range of the device (−40°C to +150°C). A typical performance curve is shown in Figure 6.

Table 5. Temperature Data Format

Temperature	Digital Output DB13…DB0
−40°C	11, 1011 0000 0000
−30°C	11, 1100 0100 0000
−25°C	11, 1100 1110 0000
−10°C	11, 1110 1100 0000
−0.03125°C	11, 1111 1111 1111
0°C	00, 0000 0000 0000
+0.03125°C	00, 0000 0000 0001
+10°C	00, 0001 0100 0000
+25°C	00, 0011 0010 0000
+50°C	00, 0110 0100 0000
+75°C	00, 1001 0110 0000
+100°C	00, 1100 1000 0000
+125°C	00, 1111 1010 0000
+150°C	01, 0010 1100 0000

Temperature Conversion Formula

1. *Positive Temperature* = *ADC Code*(*d*)/32

2. *Negative Temperature* = (*ADC Code**(*d*) – 16384)/32
   *Using all 14 bits of the data byte, includes the sign bit.

   Negative Temperature = (*ADC Code*(*d*)* – 8192)/32
   *DB13 (sign bit) is removed from the ADC code

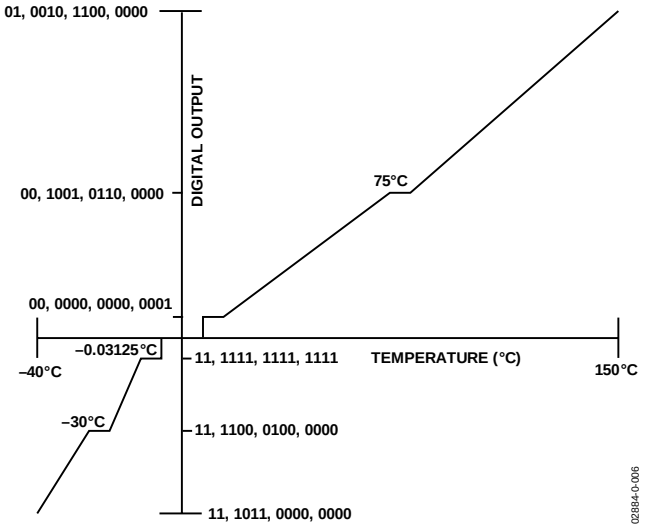

Figure 12. Temperature to Digital Transfer Function

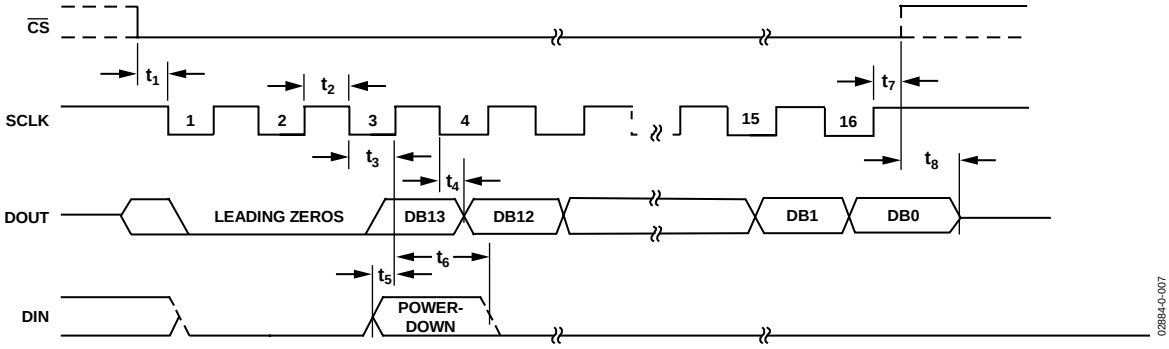

Figure 13. Serial Interface Timing Diagram

SERIAL INTERFACE

The serial interface on the ADT7301 consists of four wires: $\overline{CS}$, SCLK, DIN, and DOUT. The interface can be operated in 2-wire mode with $\overline{CS}$ and DIN tied to ground, in which case the interface has read-only capability, with data being read from the data register via the DOUT line. It is advisable to utilize $\overline{CS}$, which improves synchronization between the ADT7301 and the master device. The DIN line is used to write the part into standby mode, if required. The $\overline{CS}$ line is used to select the device when more than one device is connected to the serial clock and data lines. The part operates in a slave mode and requires an externally applied serial clock to the SCLK input to access data from the data register. The serial interface on the ADT7301 allows the part to be interfaced to systems that provide a serial clock synchronized to the serial data, such as the 80C51, 87C51, 68HC11, 68HC05 and PIC16Cxx microcontrollers as well as DSP processors.

A read operation from the ADT7301 accesses data from the temperature value register while a write operation to the part writes data to the control register.

Read Operation

Figure 13 shows the timing diagram for a serial read from the ADT7301. The $\overline{CS}$ line enables the SCLK input. Thirteen bits of data plus a sign bit are transferred during a read operation. Read operations occur during streams of 16 clock pulses. The first two bits out are leading zeros and the next 14 bits contain the temperature data. If $\overline{CS}$ remains low and 16 more SCLK cycles are applied, the ADT7301 loops around and outputs the two leading zeros plus the 14 bits of data that are in the temperature value register. When $\overline{CS}$ returns high, the DOUT line goes into three-state. Data is clocked out onto the DOUT line on the falling edge of SCLK.

Write Operation

Figure 13 also shows the timing diagram for a serial write to the ADT7301. The write operation takes place at the same time as the read operation. Only the third bit in the data stream provides a user-controlled function. This third bit is the power-down bit, which, when set to a 1, puts the ADT7301 into shutdown mode. Besides the power-down bit, all bits in the input data stream should be zero to ensure correct operation of the ADT7301. Data is loaded into the control register on the 16th rising SCLK edge; the data takes effect at this time, i.e., if the part is programmed to go into shutdown, it does so at this point. If $\overline{CS}$ is brought high before this 16th SCLK edge, the control register is not loaded and the power-down status of the part does not change. Data is clocked into the ADT7301 on the rising edge of SCLK.

MICROPROCESSOR INTERFACING

The ADT7301's serial interface allows for easy interface to most microcomputers and microprocessors. Figure 14 through Figure 17 show some typical interface circuits. The serial interface on the ADT7301 consists of four wires: $\overline{CS}$, DIN, DOUT and SCLK. All interface circuits shown utilize all four interface lines. However, it is possible to operate the interface with three wires. If the application does not require the power-down facility offered by the ADT7301, the DIN line can be tied permanently low. Thus, the interface can be operated from just three wires: SCLK, $\overline{CS}$, and DOUT.

The serial data transfer to and from the ADT7301 requires a 16-bit read operation. Many 8-bit microcontrollers have 8-bit serial ports, and this 16-bit data transfer is handled as two 8-bit transfers. Other microcontrollers and DSP processors transfer 16 bits of data in a serial data operation.

ADT7301 to MC68HC11 Interface

Figure 14 shows an interface between the ADT7301 and the MC68HC11 microcontroller. The MC68HC11 is configured in master mode with its CPOL and CPHA bits set to a Logic 1. When the MC68HC11 is configured like this, its SCLK line idles high between data transfers. Data is transferred to and from the ADT7301 in two 8-bit serial data operations. The diagram shows the full (4-wire) interface. PC1 of the MC68HC11 is configured as an output and is used to drive the $\overline{CS}$ input.

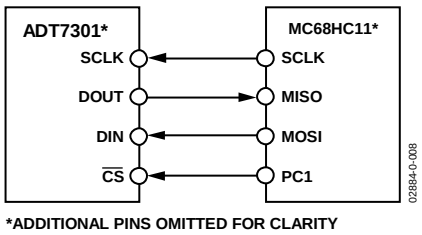

Figure 14. ADT7301 to MC68HC11 Interface

ADT7301 to 8051 Interface

An interface circuit between the ADT7301 and the microcontroller is shown in Figure 15. The 8051 is configured in its Mode 0 serial interface mode. The serial clock line of the 8051 (on P3.1) idles high between data transfers. Data is transferred to and from the ADT7301 in two 8-bit serial data operations. The ADT7301 outputs the MSB of its data stream as the first valid bit while the 8051 expects the LSB first. Thus, the data read into the serial buffer needs to be rearranged before the correct data-word from the ADT7301 is available in the accumulator.

In the example shown, the ADT7301 is connected to the serial port of the 8051. Because the serial interface of the 8051 contains only one data line, the DIN line of the ADT7301 is tied low in the interface example given in Figure 15.

For applications that require the ADT7301's power-down feature, the serial interface should be implemented using data port lines on the 8051. This allows a full-duplex serial interface to be implemented. The method involves "bit-banging" a port line to generate a serial clock while using two other port lines to shift data in and out with the fourth port line connecting to $\overline{CS}$. Port lines 1.0 through 1.3 (with P1.1 configured as an input) can be used to connect to SCLK, DOUT, DIN, and $\overline{CS}$, respectively, to implement this scheme.

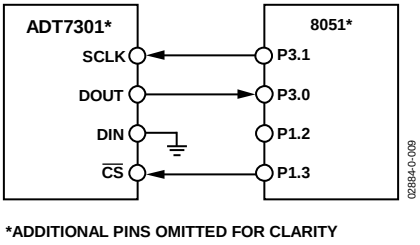

Figure 15. ADT7301 to 8051 Interface

ADT7301 to PIC16C6x/7x Interface

Figure 16 shows an interface circuit between the ADT7301 and the PIC16C6x/7x microcontroller. The PIC16C6x/7x synchronous serial port (SSP) is configured as an SPI master with the clock polarity bit set to a Logic 1. In this mode, the serial clock line of the PIC16C6x/7x idles high between data transfers. Data is transferred to and from the ADT7301 in two 8-bit serial data operations. In the example shown, port line RA1 is being used to generate the $\overline{CS}$ for the ADT7301.

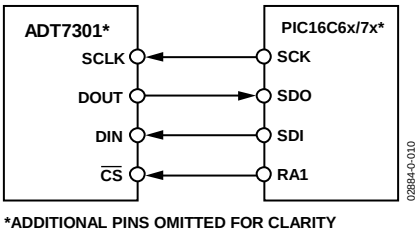

Figure 16. ADT7301 to PIC16C6x/7x Interface

The following software program shows how to program an PIC16F873 to communicate with the ADT7301. The PIC16F873 is configured as an SPI master with the PortA.1 pin used as $\overline{CS}$. Any Microchip microcontroller can use this program by simply exchanging the include file for the device that's being used.

```
#include <16F873.h>
#device adc=8
#use delay(clock=4000000)
#fuses NOWDT,XT, PUT, NOPROTECT, BROWNOUT, LVP
#BIT CKP = 0x14.4
#define CS PIN_A1
void main(){
int MSByte,LSByte;
long int ADC_Temp_Code;
float TempVal,ADC_Temp_Code_dec;


setup_spi(spi_master);                                  //Pic is set up as Master device.
CKP = 1;                                                //Idle state of clock is high.

do{
  delay_ms(10);                                         //Allow time for conversions.

  Output_low(CS);                                       //Pull CS low.
  delay_us(10);                                         //CS to SCLK setup time.
  MSByte = SPI_Read(0);                                 //The first byte is clocked in.
     LSByte = SPI_Read(0);                              //The second byte is clocked in.

     delay_us(10);                                      //SCLK to CS setup time.
  Output_High(CS);                                      //Bring CS high.

  MSByte = 0x03;
  LSByte = 0x20;

  ADC_Temp_Code = make16(MSByte,LSByte);                //16bit ADC code is stored ADC_Temp_Code.
  ADC_Temp_Code_dec = (float)ADC_Temp_Code;             //Covert to float for division.

  if ((0x2000 & ADC_Temp_Code) == 0x2000)               //Check sign bit for negative value.
      {
      TempVal = (ADC_Temp_Code_dec - 16384)/32;         //Conversion formula if negative temperature.
      }
  else
      {
      TempVal = (ADC_Temp_Code_dec/32);                 //Conversion formula if positive temperature.
      }
   }while(True);
                                                        //Temperature value stored in TempVal.
}
```

ADT7301 to ADSP-21xx Interface

Figure 17 shows an interface between the ADT7301 and the ADSP-21xx DSP processor. To ensure correct operation of the interface, the SPORT control register should be set up as follows:

TFSW = RFSW = 1, alternate framing
INVRFS = INVTFS = 1, active low framing signal
DTYPE = 00, right justify data
SLEN = 1111, 16-bit data-words
ISCLK = 1, internal serial clock
TFSR = RFS = 1, frame every word
IRFS = 0, RFS configured as input
ITFS = 1, TFS configured as output

The interface requires an inverter between the SCLK line of the ADSP-21xx and the SCLK input of the ADT7301. The ADSP-21xx has the TFS and RFS of the SPORT tied together, with TFS set as an output and RFS set as an input. The DSP operates in alternate framing mode, and the SPORT control register is set up as described previously.

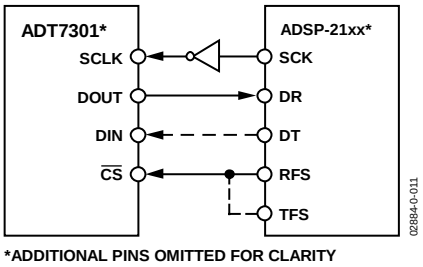

Figure 17. ADT7301 to ADSP-21 Interface

MOUNTING THE ADT7301

The ADT7301 can be used for surface- or air-temperature sensing applications. If the device is cemented to a surface with thermally conductive adhesive, the die temperature will be within about 0.1°C of the surface temperature, thanks to the ADT7301's low power consumption. Care should be taken to insulate the back and leads of the device from the air if the ambient air temperature is different from the surface temperature being measured.

The ground pin provides the best thermal path to the die, so the temperature of the die will be close to that of the printed circuit ground track. Care should be taken to ensure that this is in good thermal contact with the surface being measured.

As with any IC, the ADT7301 and its associated wiring and circuits must be kept free from moisture to prevent leakage and corrosion, particularly in cold conditions where condensation is more likely to occur. Water-resistant varnishes and conformal coatings can be used for protection. The small size of the ADT7301 allows it to be mounted inside sealed metal probes, which provide a safe environment for the device.

SUPPLY DECOUPLING

The ADT7301 should be decoupled with a 0.1 μF ceramic capacitor between V_{DD} and GND. This is particularly important if the ADT7301 is mounted remote from the power supply.

OUTLINE DIMENSIONS

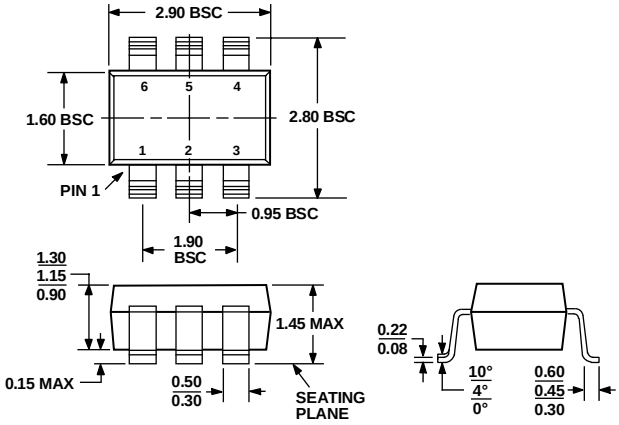

COMPLIANT TO JEDEC STANDARDS MO-178AB

Figure 18. 6-Lead Small Outline Transistor Package [SOT-23]
(RJ-6)
Dimensions shown in millimeters

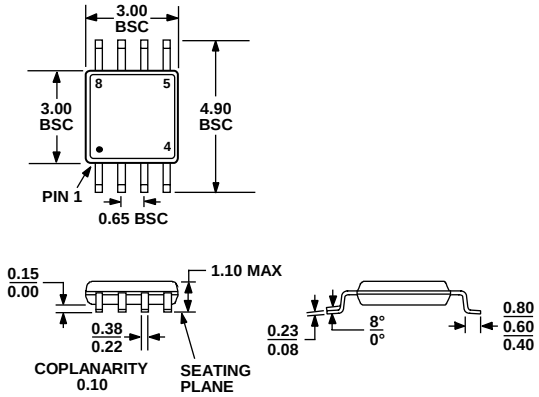

COMPLIANT TO JEDEC STANDARDS MO-187AA

Figure 19. 8-Lead Mini Small Outline Package [MSOP]
(RM-8)
Dimensions shown in millimeters

ORDERING GUIDE

Model	Temperature Range	Temperature Accuracy[1]	Package Description	Samples Branding Information	Package Option
ADT7301ART-500RL7	−40°C to +150°C	±1°C	6-Lead SOT-23	TCS	RJ-6
ADT7301ART-REEL7	−40°C to +150°C	±1°C	6-Lead SOT-23	TCS	RJ-6
ADT7301ART-REEL	−40°C to +150°C	±1°C	6-Lead SOT-23	TCS	RJ-6
ADT7301ARM	−40°C to +150°C	±1°C	8-Lead MSOP	TCS	RM-8
ADT7301ARM-REEL7	−40°C to +150°C	±1°C	8-Lead MSOP	TCS	RM-8
ADT7301ARM-REEL	−40°C to +150°C	±1°C	8-Lead MSOP	TCS	RM-8
ADT7301ARTZ-500RL7[2]	−40°C to +150°C	±1°C	6-Lead SOT-23		RJ-6
ADT7301ARTZ-REEL7[2]	−40°C to +150°C	±1°C	6-Lead SOT-23		RJ-6
ADT7301ARTZ-REEL[2]	−40°C to +150°C	±1°C	6-Lead SOT-23		RJ-6
ADT7301ARMZ[2]	−40°C to +150°C	±1°C	8-Lead MSOP		RM-8
ADT7301ARMZ-REEL7[2]	−40°C to +150°C	±1°C	8-Lead MSOP		RM-8
ADT7301ARMZ-REEL[2]	−40°C to +150°C	±1°C	8-Lead MSOP		RM-8

[1] Temperature accuracy is over 0°C to 70°C temperature range.
[2] Pb-free models.

© 2004 Analog Devices, Inc. All rights reserved. Trademarks and registered trademarks are the property of their respective owners.