查询an5625供应商 捷多邦，专业PCB打样工厂，24小时加急出货

AN5625N

TV PAL/NTSC/M-NTSC Chrominance-Signal Processing IC

Overview

The AN5625N is an integrated circuit designed for color TV chrominance-signal processing circuit.

Features

- A PAL/NTSC/M-NTSC system demodulator is possible in combination with the AN5615
- 4-system demodulator is possible in combination with the AN5615 and the AN5635N

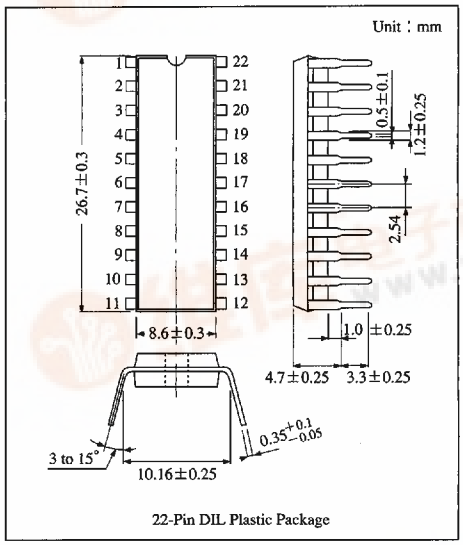

22-Pin DIL Plastic Package

Block Diagram

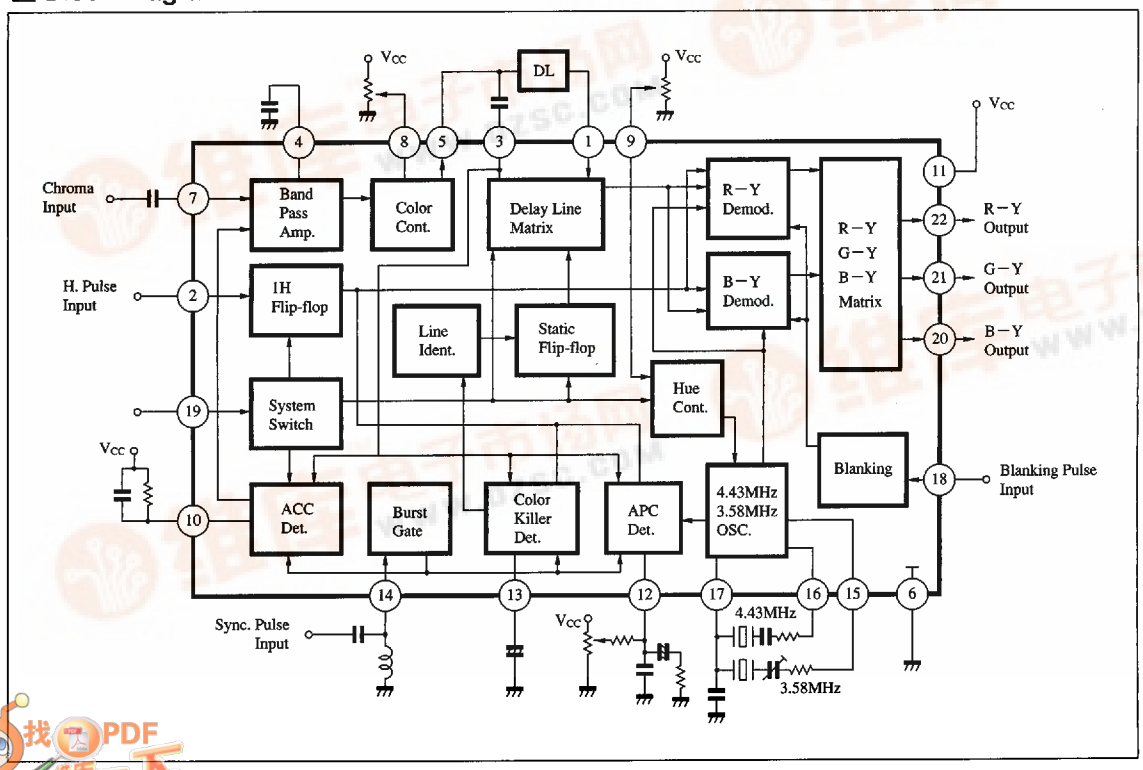

找PDF 维库一下 pdf.dzsc.com

Pin Descriptions

Pin No.	Pin name	Pin No.	Pin name
1	Chroma sig. input (DLIH)	12	APC filter
2	H. pulse input	13	Color killer filter
3	Chroma sig. input	14	Burst gate pulse input
4	Chroma by-pass	15	3.58MHz OSC
5	Chroma sig. output	16	4.43MHz OSC
6	GND	17	OSC input
7	Chroma sig. input	18	BLK pulse input
8	Color control	19	System SW.
9	Tint control	20	B−Y output
10	ACC filter	21	G−Y output
11	V_{CC}	22	R−Y output

Absolute Maximum Ratings (Ta=25℃)

Parameter		Symbol	Rating	Unit
Supply voltage		V_{CC}	14.4	V
Circuit current		I_{CC}	83	mA
Power dissipation		P_D	1200	mW
Temperature	Operating ambient temperature	T_{opr}	−20 to +70	℃
	Storage Temperature	T_{stg}	−55 to +150	℃

ICs for TV

Electrical Characteristics (Ta=25℃)

Parameter	Symbol	Condition	min	typ	max	Unit
Total circuit current	I_{tot}	V_{CC}=12V	40	54	69	mA
Pin① voltage	V_{1-6}	V_{CC}=12V	2.3	2.8	3.3	V
Pin③ voltage	V_{3-6}	V_{CC}=12V	2.3	2.8	3.3	V
Pin⑤ voltage	V_{5-6}	V_{CC}=12V	8.0	8.5	9.0	V
Pin⑦ voltage	V_{7-6}	V_{CC}=12V	0.8	1.3	1.8	V
Max. output voltage (R−Y)	e_o	Color bar input 150mV_{P-P}, Color max. Pin⑩=V_{CC}	7.5	8.0	—	V_{P-P}
Output voltage (R−Y)	e_{o2}	Color bar input 150mV_{P-P}, Color typ	2.25	3.0	3.75	V_{P-P}
Ratio of demodulated signals (R−Y)/(B−Y)	R/B	⑦=4.43MHz 100mV_{P-P} ⑰=4.44MHz 500mV_{P-P}	0.72	0.83	0.9	times
Ratio of demodulated signals (G−Y)/(B−Y)	G/B	⑦=4.43MHz 100mV_{P-P} ⑰=4.44MHz 500mV_{P-P}	0.31	0.37	0.42	times
Phase difference between (R−Y) and (B−Y) signals	∠R	⑦=4.43MHz 100mV_{P-P} ⑰=4.44MHz 500mV_{P-P} ∠B=0	86.5	90.0	93.5	deg.
Phase difference between (G−Y) and (B−Y) signals	∠G	⑦=4.43MHz 100mV_{P-P} ⑰=4.44MHz 500mV_{P-P} ∠B=0	229	236	244	deg.
PAL color killer level	$e_{K(PAL)}$	Color bar 150mV_{P-P}, (=0dB) Color center	38	43	48	dB
NTSC color killer level	$e_{K(NTSC)}$	Color bar 150mV_{P-P}, (=0dB) Color center, Tint center	39	44	49	dB
DC output voltage	E_{C-Y}	No signal input	6.9	7.35	7.8	V
Tint center	θ	Color bar 150mV_{P-P}, Color typ, Tint typ	—	0	±7	deg.
Tint variable range	$\Delta\theta$	Color typ, Tint max. to min.	±35	±45	±55	deg.

■ Electrical Characteristics (cont.) (Ta=25℃)

Parameter	Symbol	Condition	min	typ	max	Unit
APC pull-in range	f_{APC}	Color bar150mV_{P-P}, burst frequency variable	±500	±800	—	Hz
Free-run frequency supply voltage dependency	$\Delta f_O/V_{CC}$	No input, Pin⑫ for non connection, V_{CC}=12V±20%	—	—	120	Hz
Free-run frequency ambient temperature dependency	$\Delta f_O/Ta$	No input, Pin⑫ for non connection, Ta=−20 to +70℃	—	1.5	2.5	Hz/deg.
PAL/NTSC system changeover level	$V_{19\,PAL}$	Pin⑲ control voltage	5.6	6.1	6.6	V
NTSC/M-NTSC system changeover level	$V_{19\,NTSC}$	Pin⑲ control voltage	1.9	2.2	2.5	V
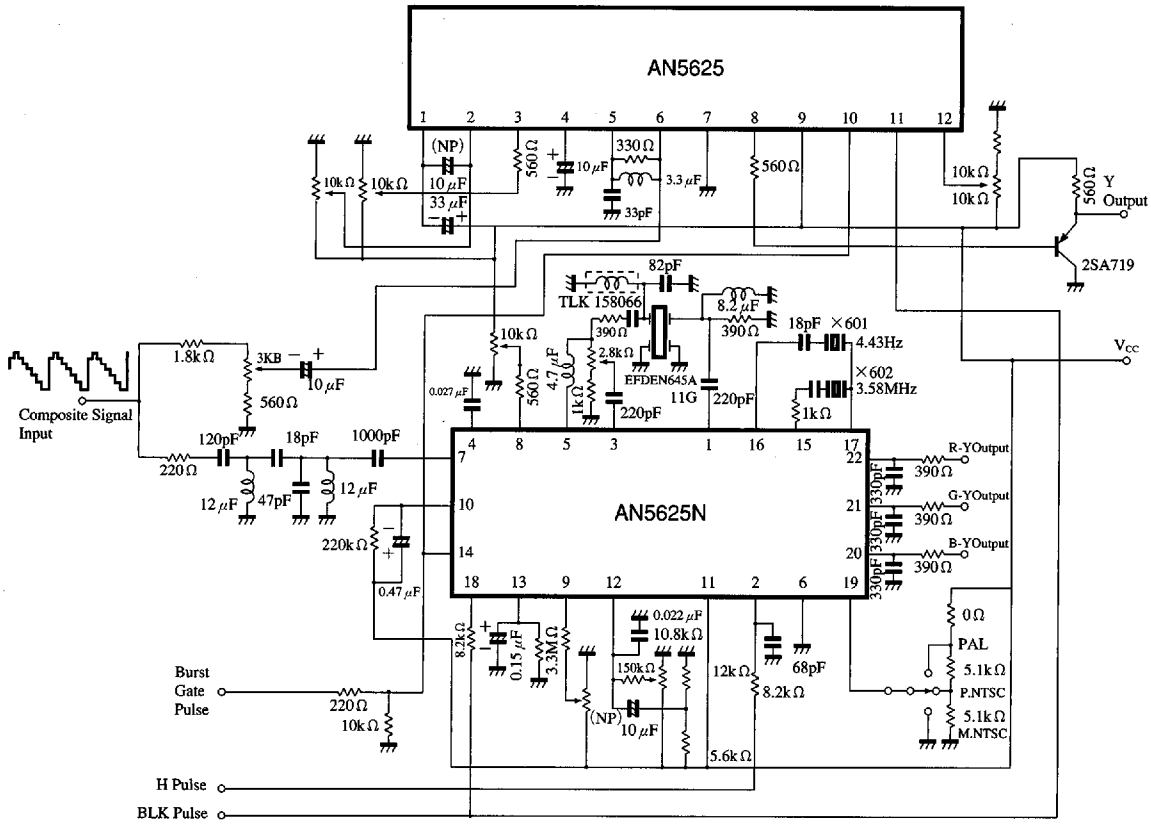
■ Application Circuit