# 3V electronic governor

## BA6235F

The BA6235F is an IC for controlling the speed of low voltage DC motors. It consists of a reference voltage generator, current multiplier, and DC amplifier. The speed of DC motor is controlled by detecting the counter-electromotive force generated by the motor. Various DC motors can be driven by changing the external CR time constants.

●Applications
3V radio cassette tape recorders
Micro-cassette tape recorders

●Features
1) Wide range of operating voltage. (1.8 ～ 5V)
2) Low current consumption. ($I_Q$ = 2.0mA)
3) Various DC motors can be driven by changing the external CR time constants.

●Absolute maximum ratings (Ta = 25°C)

| Parameter | | Symbol | Limits | Unit |
|---|---|---|---|---|
| Power supply voltage | | $V_{CC}$ | 8.0 | V |
| Power dissipation | BA6235F | Pd | 350* | mW |
| Operating temperature | | Topr | −20～+75 | ℃ |
| Storage temperature | | Tstg | −55～+125 | ℃ |

* Reduced by 3.5 mW for each increase in Ta of 1℃ over 25℃.

●Recommended operating conditions (Ta = 25°C)

| Parameter | Symbol | Min. | Typ. | Max. | Unit |
|---|---|---|---|---|---|
| Power supply voltage | $V_{CC}$ | 1.8 | 3.0 | 5.0 | V |
| Maximum motor current | $I_M$ | — | — | 800 | mA |

●Block diagram

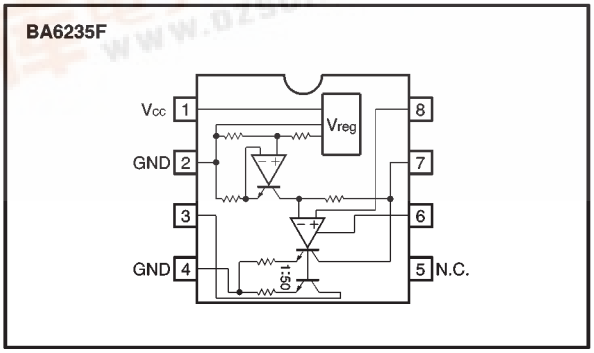

●Electrical characteristics (unless otherwise noted, Ta = 25°C and $V_{CC}$ = 3.0V)

| Parameter | Symbol | Min. | Typ. | Max. | Unit | Conditions |
|---|---|---|---|---|---|---|
| Supply current | $I_Q$ | — | 2.0 | 5.5 | mA | $I_M$=0mA |
| Output saturation voltage | $V_{O\,sat}$ | — | 0.1 | 0.3 | V | $I_M$=120mA |
| Reference voltage | $V_{ref}$ | 165 | 190 | 215 | mV | $I_M$=120mA |
| Current ratio | K | 45 | 50 | 55 | — | $I_M$=50～150mA |
| Reference voltage vs. voltage | $\frac{\Delta V_{ref}}{V_{ref}} / \Delta V_{CC}$ | — | 0.1 | — | % / V | $I_M$=120mA, $V_{CC}$=1.8～3.5V |
| Current ratio vs. voltage | $\frac{\Delta K}{K} / \Delta V_{CC}$ | — | 0.1 | — | % / V | $I_M$=50～150mA, $V_{CC}$=1.8～3.5V |
| Reference voltage vs. current | $\frac{\Delta V_{ref}}{V_{ref}} / \Delta I_M$ | — | 0.002 | — | % / mA | $I_M$=20～200mA |
| Current ratio vs. current | $\frac{\Delta K}{K} / \Delta I_M$ | — | 0.05 | — | % / mA | $I_M$=20～200mA |
| Reference voltage vs. temperature | $\frac{\Delta V_{ref}}{V_{ref}} / \Delta Ta$ | — | 0.02 | — | % / ℃ | $I_M$=120mA, Ta=−20～+75℃ |
| Current ratio vs. temperature | $\frac{\Delta K}{K} / \Delta Ta$ | — | 0.02 | — | % / ℃ | $I_M$=50～150mA, Ta=−20～+75℃ |

●Application example

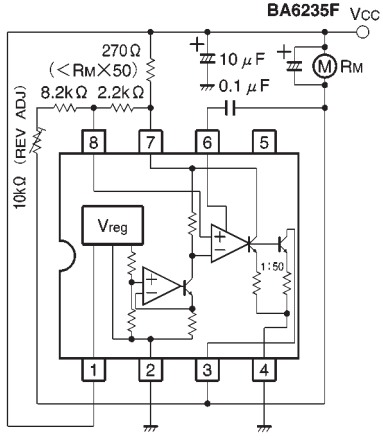

●External dimensions (Units: mm)

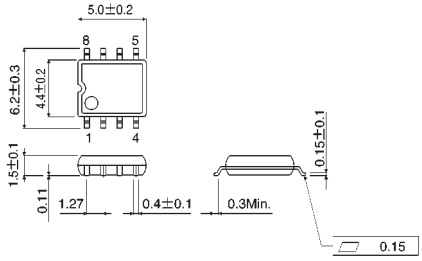


SOP8