查询BFR65供应商 捷多邦，专业PCB打样工厂，24小时加急出货

NPN SILICON RF POWER TRANSISTOR

DESCRIPTION:

The **ASI BRF65** is Designed for 20 V Large-Signal RF Amplifier Applications.

MAXIMUM RATINGS

I_C	400 mA 1.0 A (PEAK) f = ≥ 1.0 MHz
V_{CE}	25 V
V_{CB}	40 V
P_{DISS}	5.0 W @ T_{mb} = 125 °C f = ≥ 1.0 MHz
T_J	-65 °C to +200 °C
T_{STG}	-65 °C to +200 °C
θ_{JC}	15 °C/W

PACKAGE STYLE SOT- 48

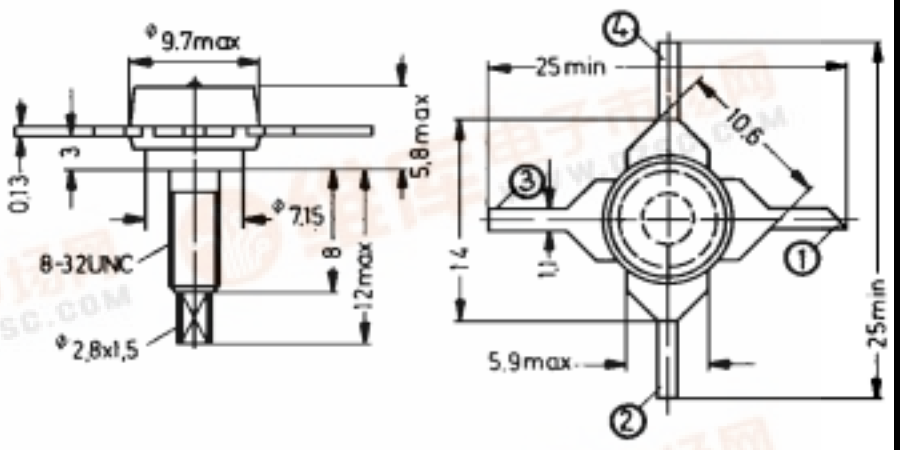

ALL DIMENSIONS IN MM
1 = COLLECTOR 2 & 4 = EMITTER 3 = BASE

CHARACTERISTICS T_C = 25 °C

SYMBOL	TEST CONDITIONS			MINIMUM	TYPICAL	MAXIMUM	UNITS
BV_{CEO}	I_C = 5.0 mA			25			V
BV_{CER}	I_C = 5.0 mA	R_{BE} = 10 Ω		40			V
BV_{CBO}	I_C = 1.0 mA			40			V
BV_{EBO}	I_E = 1.0 mA			3.5			V
I_{CBO}	V_{CB} = 20 V					100	µA
h_{FE}	V_{CE} = 20 V	I_C = 200 mA I_C = 400 mA		30 20			---
$V_{CE(SAT)}$	I_C = 200 mA	I_B = 20 mA				0.75	V
C_{ob}	V_{CB} = 20 V		f = 1.0 MHz			10	pF
f_t	V_{CE} = 20 V V_{CE} = 20 V	I_C = 200 mA I_C = 400 mA	f = 500 MHz f = 500 MHz	1.2 1.0			GHz
G_P	V_{CE} = 20 V	I_C = 200 mA	f = 200 MHz f = 800 MHz	15	19 4.5		dB
P_o	V_{CE} = 20 V	I_C = 200 mA	f = 200 MHz		450		mW