查询RF2312供应商 捷多邦，专业PCB打样工厂，24小时加急出货

RF MICRO·DEVICES

RF2312

LINEAR GENERAL PURPOSE AMPLIFIER

Typical Applications

- CATV Distribution Amplifiers
- Cable Modems
- Broadband Gain Blocks
- Laser Diode Driver
- Return Channel Amplifier
- Base Stations

Product Description

The RF2312 is a general purpose, low cost high linearity RF amplifier IC. The device is manufactured on an advanced Gallium Arsenide Heterojunction Bipolar Transistor (HBT) process, and has been designed for use as an easily cascadable 75Ω gain block. The gain flatness of better than 0.5dB from 5MHz to 1000MHz, and the high linearity, make this part ideal for cable TV applications. Other applications include IF and RF amplification in wireless voice and data communication products operating in frequency bands up to 2500MHz. The device is self-contained with 75Ω input and output impedances, and requires only two external DC biasing elements to operate as specified.

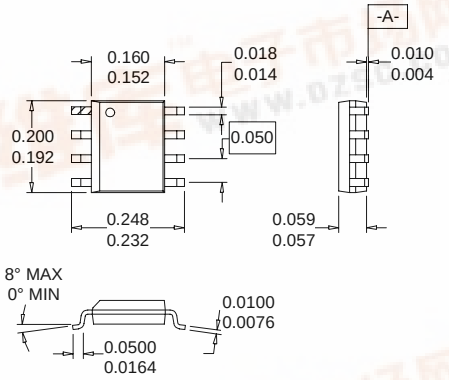

NOTES:
1. Shaded lead is pin 1.
2. All dimensions are excluding flash, protrusions or burrs.
3. Lead coplanarity: 0.005 with respect to datum "A".
4. Package surface finish: Matte (Charmilles #24~27).

Package Style: SOIC-8

Optimum Technology Matching® Applied

- ☐ Si BJT
- ☑ GaAs HBT
- ☐ GaAs MESFET
- ☐ Si Bi-CMOS
- ☐ SiGe HBT
- ☐ Si CMOS

Features

- DC to well over 2500MHz Operation
- Internally Matched Input and Output
- 15dB Small Signal Gain
- 3.8dB Noise Figure
- +20dBm Output Power
- Single 5V to 12V Positive Power Supply

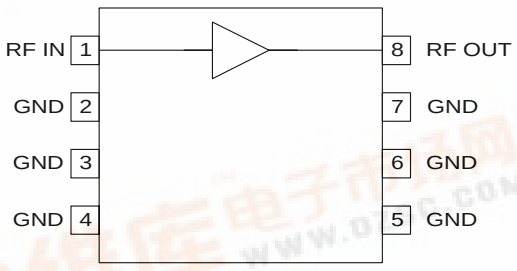

Functional Block Diagram

Ordering Information

RF2312	Linear General Purpose Amplifier
RF2312 PCBA	Fully Assembled Evaluation Board - 75Ω
RF2312 PCBA	Fully Assembled Evaluation Board - 50Ω

RF Micro Devices, Inc.
7625 Thorndike Road
Greensboro, NC 27409, USA
Tel (336) 664 1233
Fax (336) 664 0454
http://www.rfmd.com

找PDF 维库一下 pdf.dzsc.com

RF2312

Absolute Maximum Ratings

Parameter	Rating	Unit
Device Current	125	mA
Input RF Power	+18	dBm
Output Load VSWR	20:1	
Ambient Operating Temperature	-40 to +85	°C
Storage Temperature	-40 to +150	°C
Maximum Junction Temperature	150	°C

Caution! ESD sensitive device.

RF Micro Devices believes the furnished information is correct and accurate at the time of this printing. However, RF Micro Devices reserves the right to make changes to its products without notice. RF Micro Devices does not assume responsibility for the use of the described product(s).

Parameter	Specification			Unit	Condition
	Min.	Typ.	Max.		
Overall (50Ω)					T=25°C, V_{CC}=9V, Freq=900MHz, R_C=30Ω, 50Ω System, P_{IN}=-4dBm
Frequency Range		DC to 2500		MHz	3dB Bandwidth
Gain	14.5	15.1		dB	
Noise Figure		3.8	4.3	dB	From 50MHz to 300MHz, -30 to +70°C
		4.2	4.8	dB	From 300MHz to 1000MHz, -30 to +70°C
Input VSWR			1.7:1		Appropriate values for the DC blocking capacitors and bias inductor are required to maintain this VSWR at the intended operating frequency range.
Output VSWR			1.4:1		Appropriate values for the DC blocking capacitors and bias inductor are required to maintain this VSWR at the intended operating frequency range.
Output IP_3	+40	+42		dBm	At 100MHz
Output IP_3	+33	+36		dBm	At 500MHz
Output IP_3	+30	+33		dBm	At 900MHz
Output P_{1dB}	+21	+22		dBm	At 100MHz
Output P_{1dB}	+20	+21		dBm	At 500MHz
Output P_{1dB}	+17	+18.5		dBm	At 900MHz
Saturated Output Power		+23		dBm	At 100MHz
Saturated Output Power		+22.5		dBm	At 500MHz
Saturated Output Power		+20.5		dBm	At 900MHz
Reverse Isolation		20		dB	
Thermal					
$Theta_{JC}$		66		°C/W	P_{DISS}=0.61W, T_{AMB}=85°C, T_{CASE}=96.6°C, T_J=136.8°C
					No RF Input/Output
Mean Time Between Failures		$708x10^6$		hours	T_{AMB}=+25°C
		$2.75x10^6$		hours	T_{AMB}=+80°C
Power Supply					
Device Voltage (V_D)		6.0		V	On pin 8, I_{CC}=100mA
		5.0		V	On pin 8, I_{CC}=40mA
Operating Current Range	85	100	115	mA	V_{CC}=9.0V, R_C=30Ω

Parameter	Specification			Unit	Condition
	Min.	Typ.	Max.		
Overall (75Ω)					T=25°C, V_{CC}=9V, Freq=900MHz, R_C=30Ω, 75Ω System
Frequency Range		DC to 2500		MHz	3dB Bandwidth
Gain	14.5	16		dB	
Noise Figure		3.8	4.3	dB	From 50MHz to 300MHz, -30°C to +70°C.
		4.2	4.8	dB	From 300MHz to 1000MHz, -30°C to +70°C.
Input VSWR		1.3:1	1.4:1		From 50MHz to 900MHz, -30°C to +70°C. Appropriate values for the DC blocking capacitors and bias inductor are required to maintain this VSWR at the intended operating frequency range.
Output VSWR			1.25:1		From 50MHz to 300MHz, -30°C to +70°C. Appropriate values for the DC blocking capacitors and bias inductor are required to maintain this VSWR at the intended operating frequency range.
			1.4:1		From 300MHz to 500MHz, -30°C to +70°C.
		1.5:1	1.7:1		From 500MHz to 900MHz, -30°C to +70°C.
Output IP_3	+36	+38		dBm	At 100MHz
Output IP_3	+33	+36		dBm	At 500MHz
Output IP_3	+28	+30		dBm	At 900MHz
Output P_{1dB}	+21	+22		dBm	At 100MHz
Output P_{1dB}	+20	+21		dBm	At 500MHz
Output P_{1dB}	+17	+18.5		dBm	At 900MHz
Saturated Output Power		+23		dBm	At 100MHz
Saturated Output Power		+22.5		dBm	At 500MHz
Saturated Output Power		+20.5		dBm	At 900MHz
Reverse Isolation		20		dB	
77 Channels					77 Channels to 550MHz at 10dBmV, 33 channels to 760MHz at 0dBmV flat at DUT input
CSO		>86		dBc	61.25MHz
		>86		dBc	83.25MHz
		76		dBc	193.25MHz
		72		dBc	313.2625MHz
		64		dBc	547.25MHz
CTB		>86		dBc	61.25MHz
		>86		dBc	83.25MHz
		86		dBc	193.25MHz
		84		dBc	313.2625MHz
		83		dBc	547.25MHz
CNR	65	66		dB	
110 Channels					110 Channels, 10dBmV/channel at input
CSO		>86		dBc	61.25MHz
		>86		dBc	83.25MHz
		76		dBc	193.25MHz
		70		dBc	313.2625MHz
		64		dBc	547.25MHz
CTB		84		dBc	61.25MHz
		86		dBc	83.25MHz
		85		dBc	193.25MHz
		81		dBc	313.2625MHz
		80		dBc	547.25MHz
Cross Modulation		77		dBc	61.25MHz
		74		dBc	445.25MHz
CNR	65	66		dB	

RF2312

Parameter	Specification			Unit	Condition
	Min.	Typ.	Max.		
Overall (75Ω Push-Pull)					T=25°C, V_{CC}=9V or 24V, 75Ω System, RF_{IN}=-10dBm
Frequency Range		DC to 150		MHz	
Gain		15		dB	
Noise Figure		5.0		dB	From 5MHz to 150MHz, -30°C to +70°C.
Input VSWR		1.1:1			
Output VSWR		1.2:1			
Output IP_2		+71		dBm	At 10MHz
		+72		dBm	At 30MHz
		+74		dBm	At 50MHz
Output IP_3		+40		dBm	At 10MHz
		+40		dBm	At 30MHz
		+40		dBm	At 50MHz
Second Harmonic		-73		dBc	At 10MHz
		-65		dBc	At 30MHz
		-65		dBc	At 50MHz

Pin	Function	Description	Interface Schematic
1	RF IN	RF input pin. This pin is NOT internally DC-blocked. A DC-blocking capacitor, suitable for the frequency of operation, should be used in all applications. The device has internal feedback, and not using a DC-blocking capacitor will disable the temperature compensation.The bias of the device can be controlled by this pin. Adding an optional 1kΩ resistor to ground on this pin reduces the bias level, which may be compensated for by a higher supply voltage to maintain the appropriate bias level. The net effect of this is an increased output power capability, as well as higher linearity for signals with high crest factors. DC-coupling of the input is not allowed, because this will override the internal feedback loop and cause temperature instability.	
2	GND	Ground connection. For best performance, keep traces physically short and connect immediately to ground plane. Each ground pin should have a via to the ground plane.	
3	GND	Same as pin 2.	
4	GND	Same as pin 2.	
5	GND	Same as pin 2.	
6	GND	Same as pin 2.	
7	GND	Same as pin 2.	
8	RF OUT	RF output and bias pin. Because DC is present on this pin, a DC-blocking capacitor, suitable for the frequency of operation, should be used in most applications. For biasing, an RF choke in series with a resistor is needed. The value for the resistor R_C is 30Ω (0.5W) for V_{CC}=9V and 21Ω for V_{CC}=8V. The DC voltage on this pin is typically 6.0V with a current of 100mA. In lower power applications the value of R_C can be increased to lower the current and V_D on this pin.	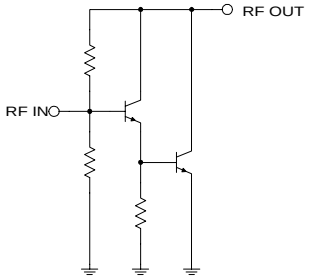

Application Schematic
5MHz to 50MHz Reverse Path

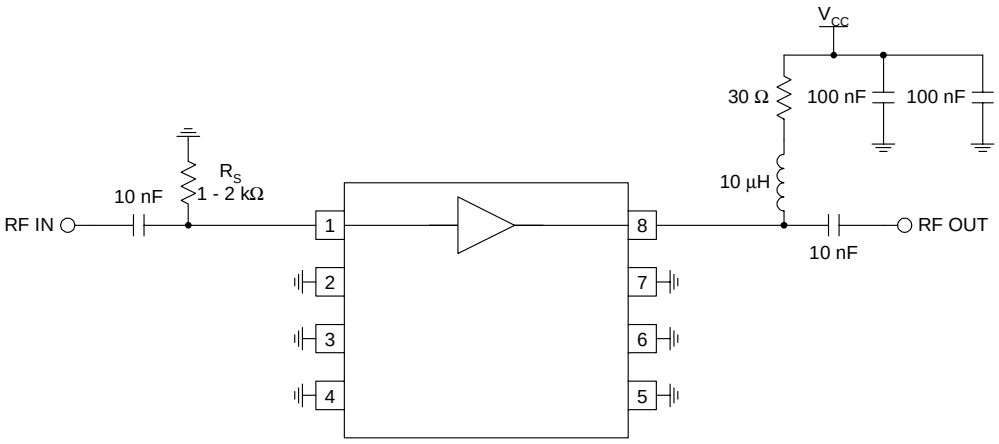

NOTE 1:
Optional resistor R_S can be used to maintain the correct bias level at higher supply voltages. This is used to increase output capability or linearity for signals with high crest factors.

Application Schematic
10dB Gain

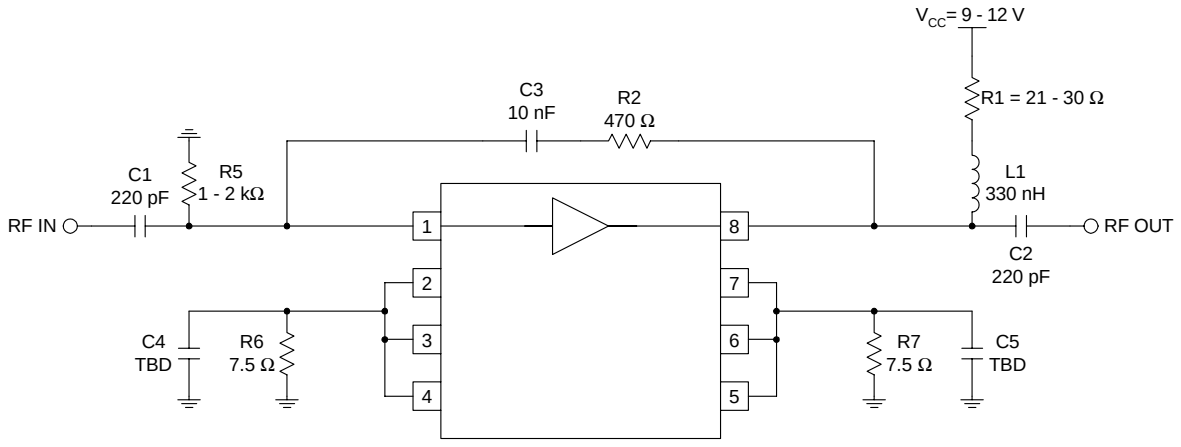

R5 is used to maintain the correct bias level at higher supply voltages and is also required in this configuration. The RC network of R2 and C3 should be kept physically as short as possible. R2 can be adjusted as required to improve the impedance matching. R6 and R7 reduce the typical gain by increasing the emitter resistance. L1 should be at least 200 Ω reactive at the lowest operating frequency. C1 and C2 should be less than 10 Ω at the lowest operating frequency. C4 and C5 improve gain flatness.

Application Schematic
Push-Pull Standard Voltage

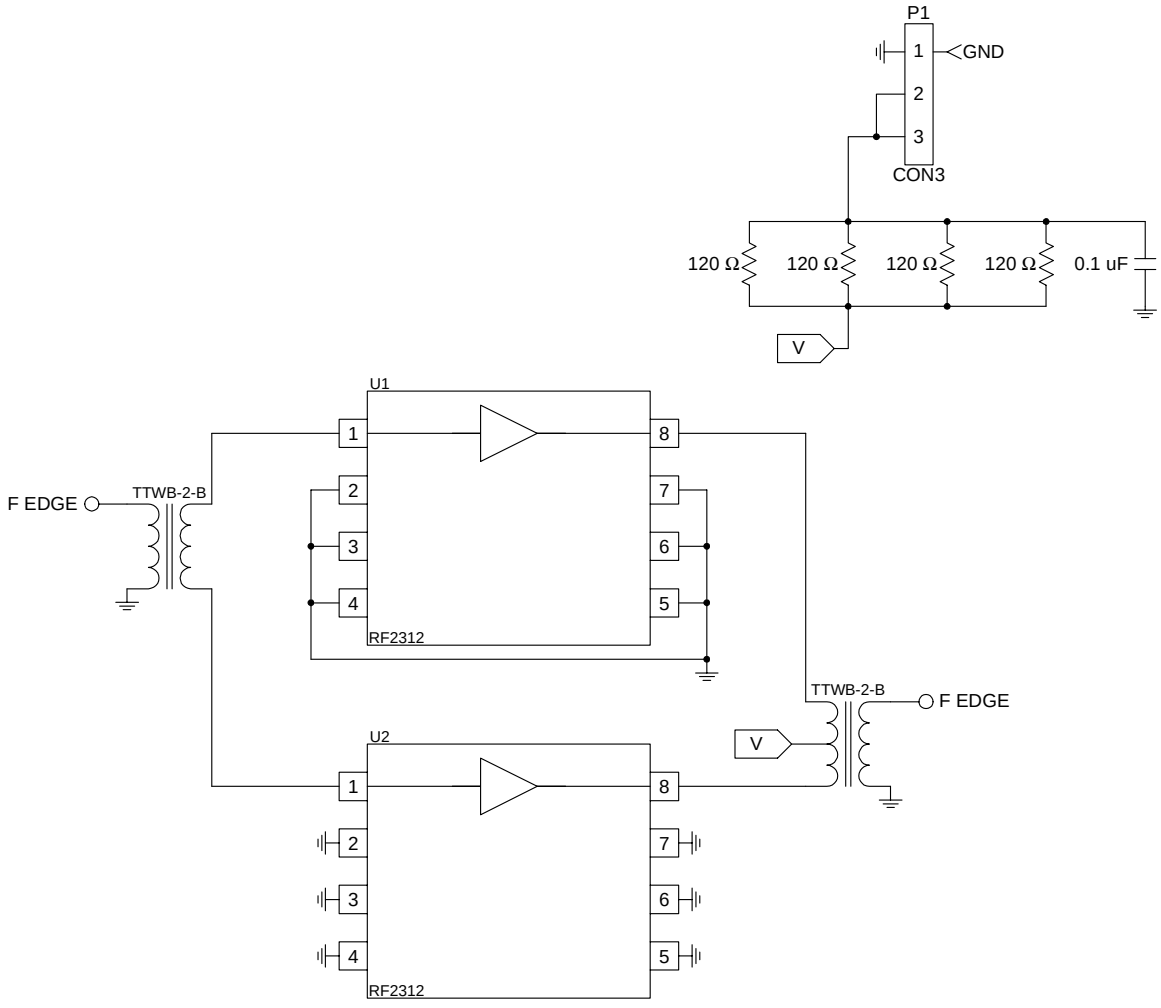

Application Schematic
Push-Pull 24V

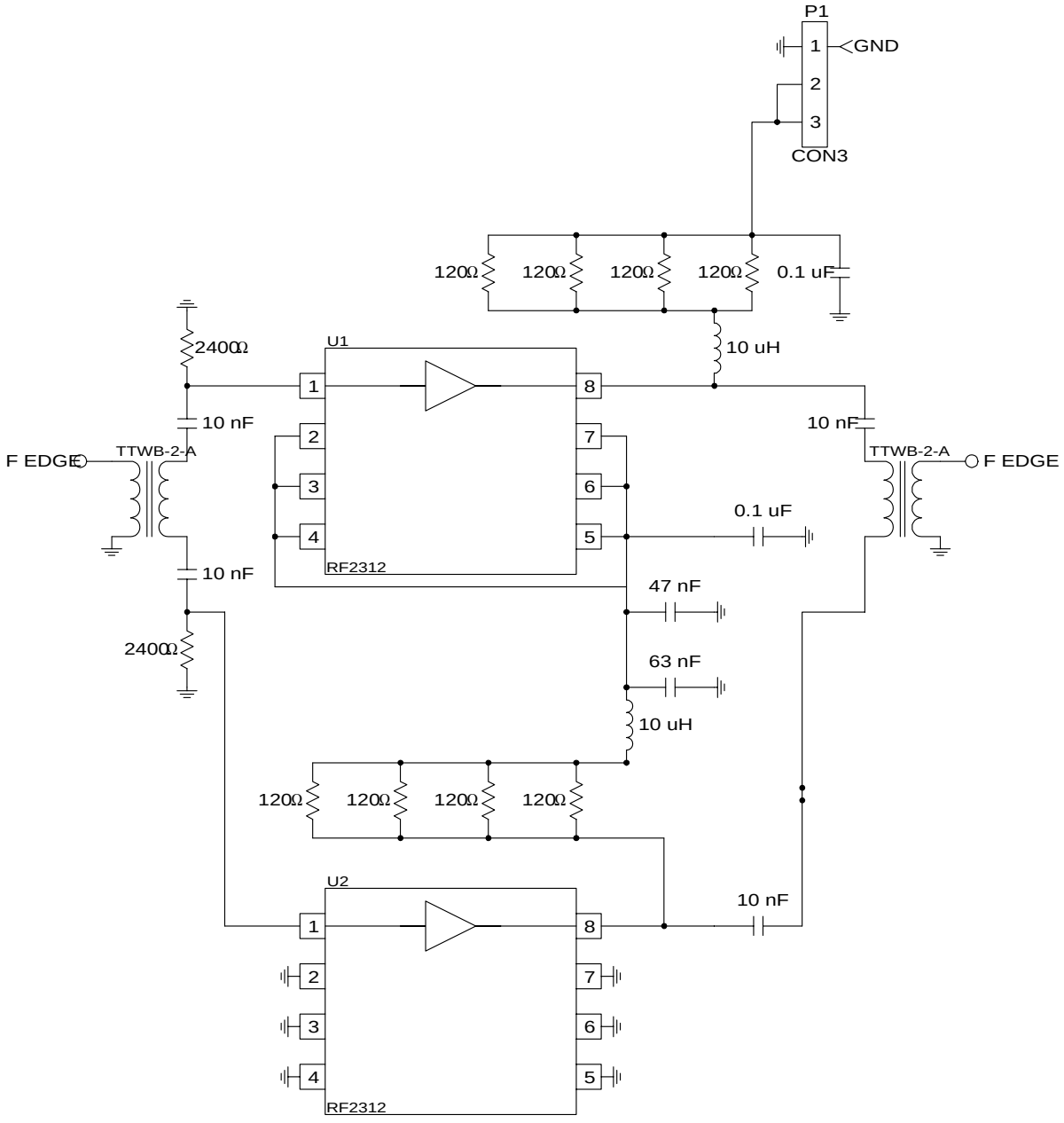

Evaluation Board Schematic - 50Ω

(Download Bill of Materials from www.rfmd.com.)

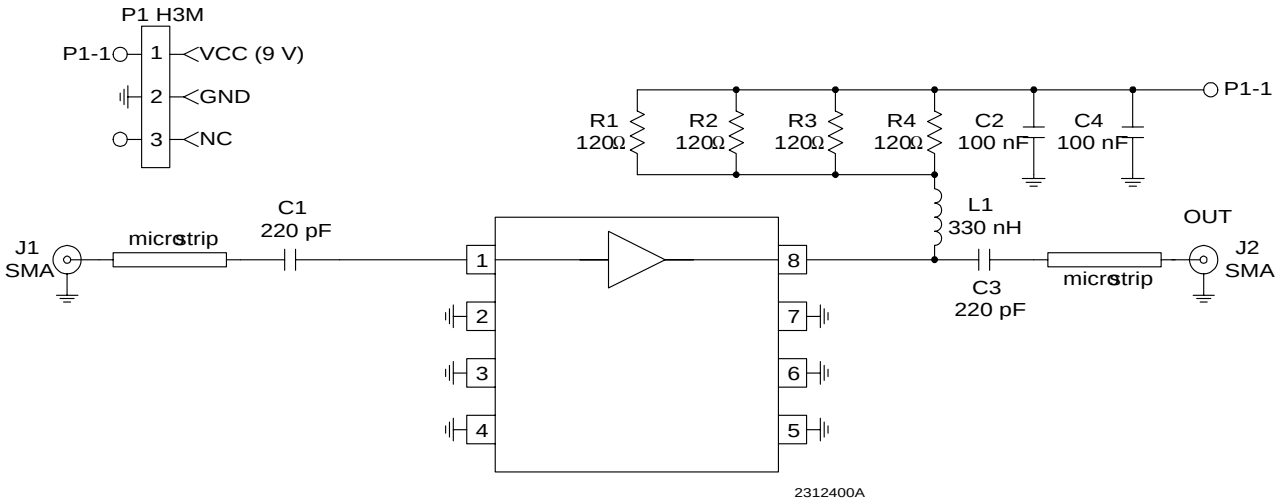

Evaluation Board Schematic - 75Ω

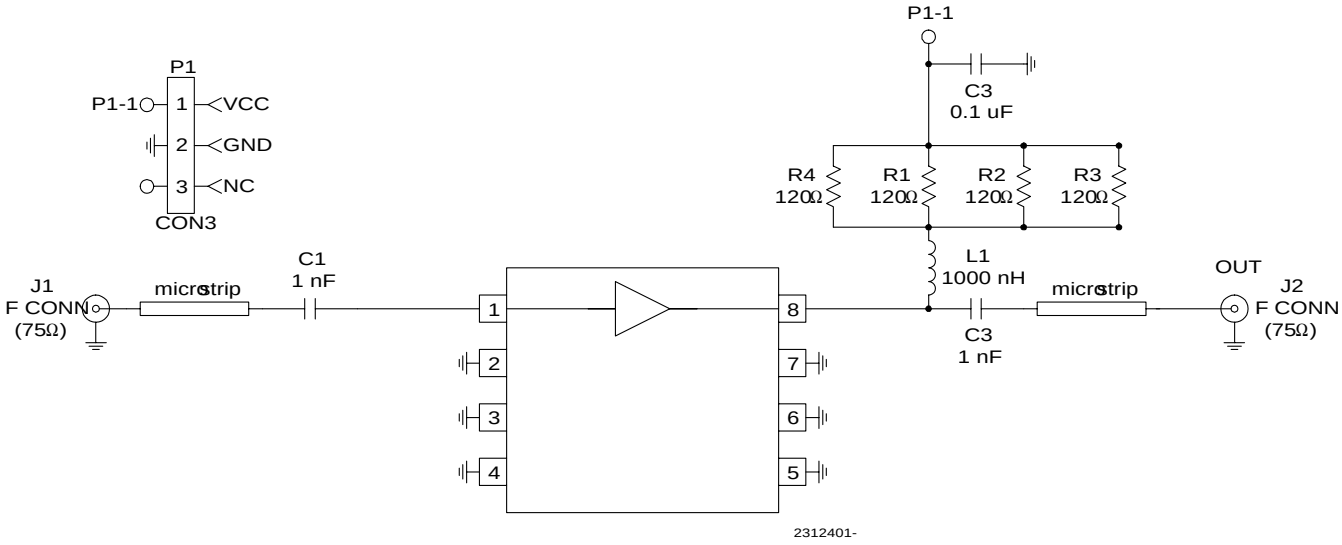

NOTE: For 5V applications, R1 to R4 may be removed (shorted). This will result in degraded distortion performance.

Evaluation Board Layout - 50Ω
2.02” x 2.02”

Board Thickness 0.031”, Board Material FR-4

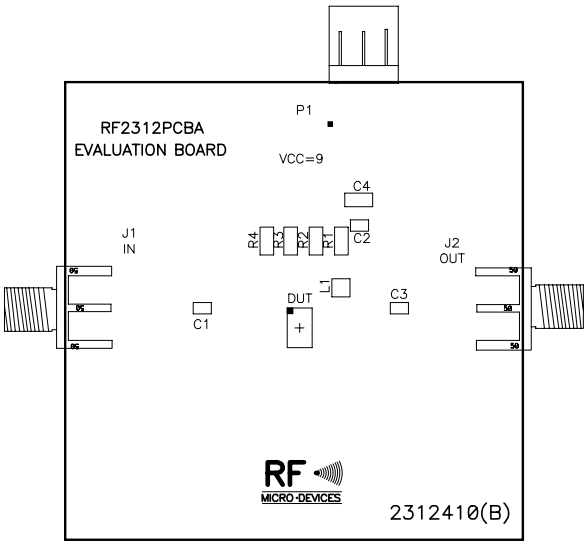

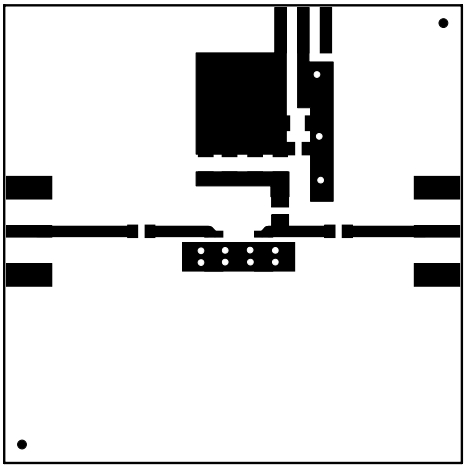

Evaluation Board Layout - 75Ω
Standard Voltage
1.40” x 1.40”

Board Thickness 0.062”, Board Material FR-4

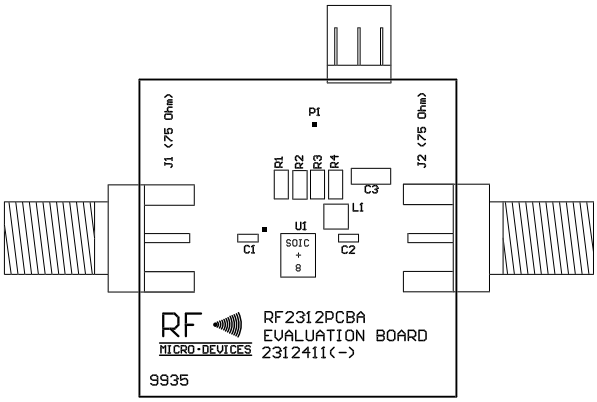

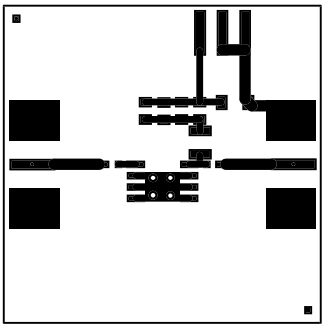

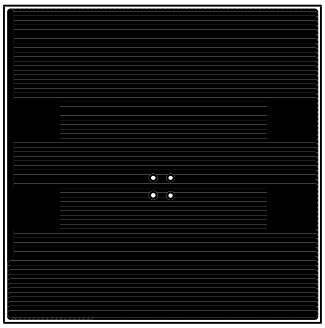

Evaluation Board Layout - 75Ω
Push-Pull, Standard Voltage
1.70” x 1.50”

Board Thickness 0.062”, Board Material FR-4

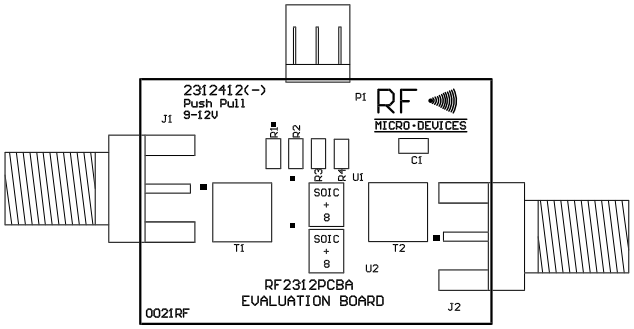

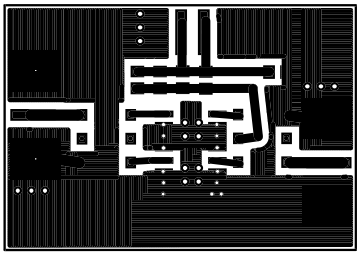

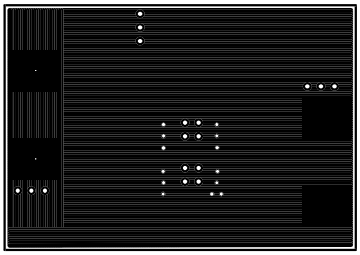

Evaluation Board Layout - 75Ω
Push-Pull, 24V
1.70” x 1.50”

Board Thickness 0.062”, Board Material FR-4

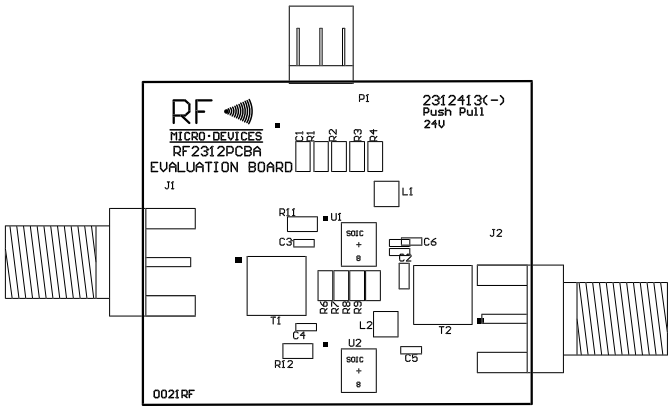

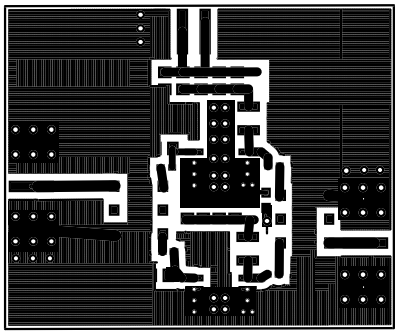

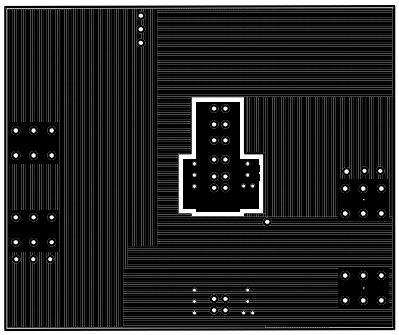

P_{OUT} versus P_{IN}
500 MHz

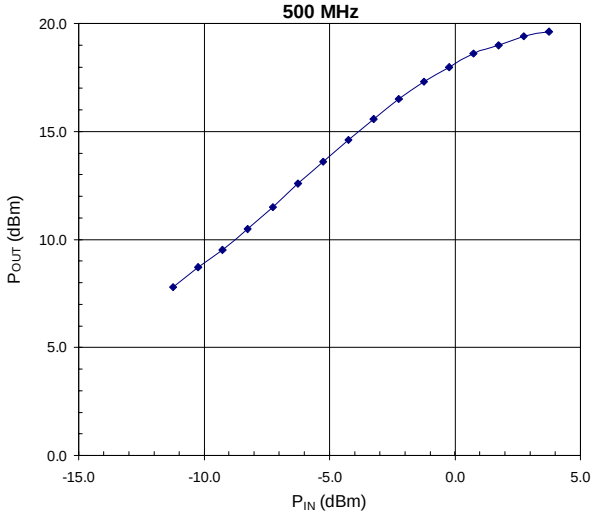

I_{CC} versus Device Voltage
(Pin 8)

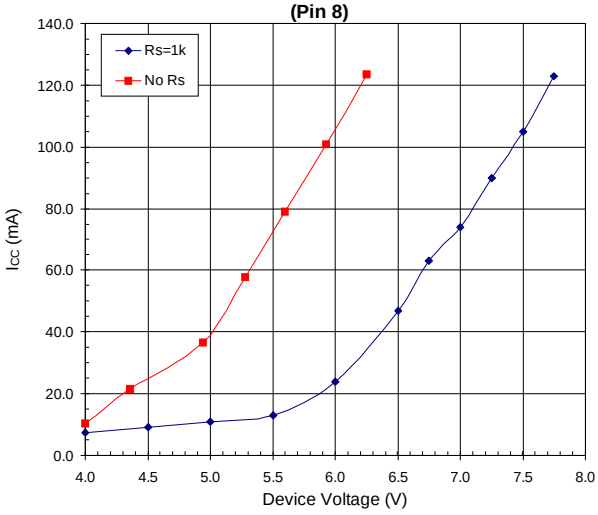

Output Third Order Intercept Point (OIP3) versus P_{IN}
500 MHz

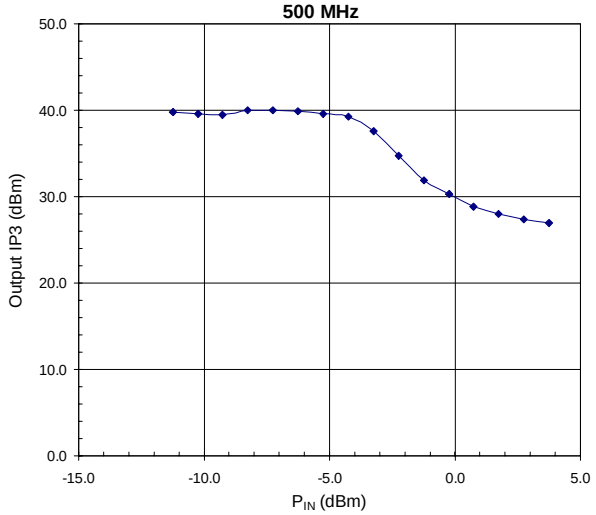

Output P1dB versus Frequency

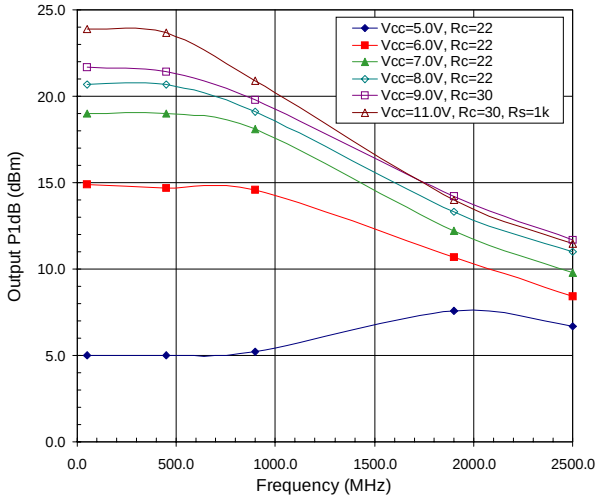

IM3 Products versus P_{OUT}
500/501 MHz

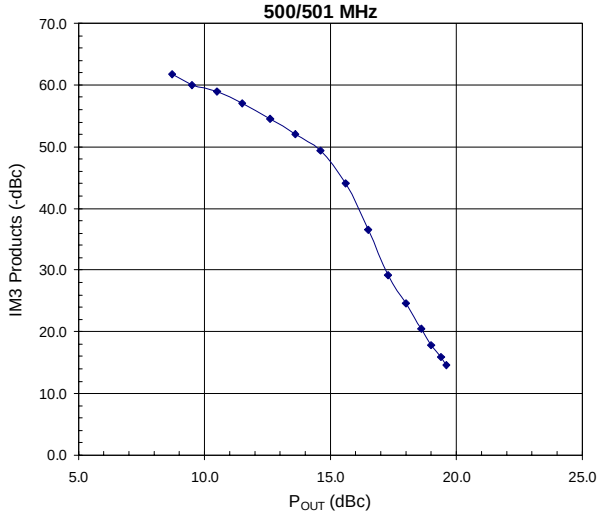

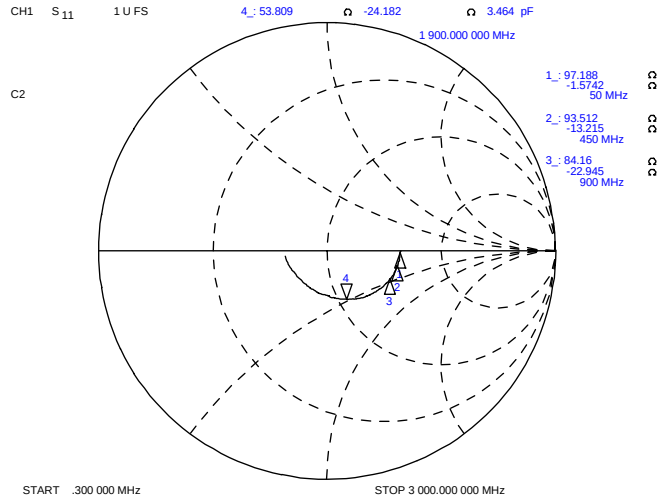
CH1 S 11 1 U FS
4_: 53.809 -24.182 3.464 pF
1 900.000 000 MHz
C2
1_: 97.188 -1.5742 50 MHz
2_: 93.512 -13.215 450 MHz
3_: 84.16 -22.945 900 MHz
START .300 000 MHz
STOP 3 000.000 000 MHz

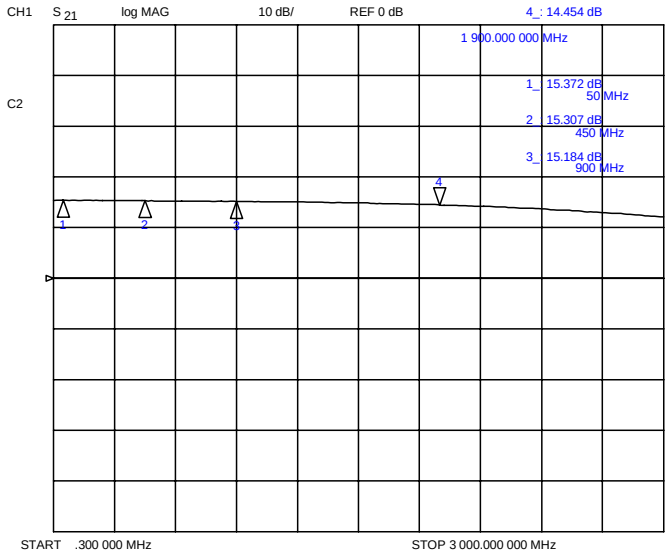
CH1 S 21 log MAG 10 dB/ REF 0 dB
4_: 14.454 dB
1 900.000 000 MHz
C2
1_: 15.372 dB 50 MHz
2_: 15.307 dB 450 MHz
3_: 15.184 dB 900 MHz
START .300 000 MHz
STOP 3 000.000 000 MHz

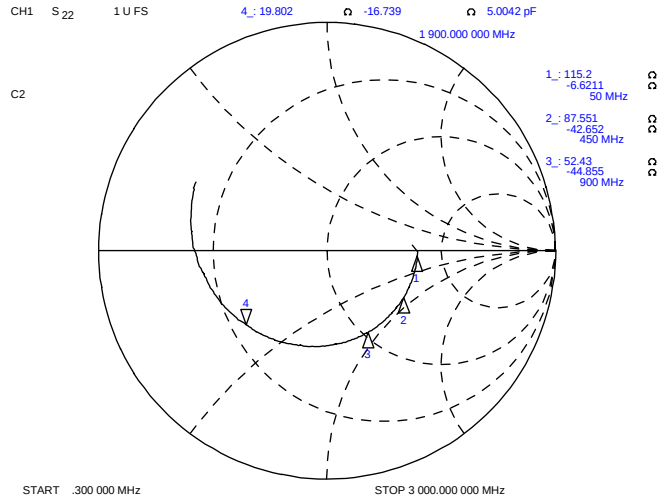
CH1 S 22 1 U FS
4_: 19.802 -16.739 5.0042 pF
1 900.000 000 MHz
C2
1_: 115.2 -6.6211 50 MHz
2_: 87.551 -42.652 450 MHz
3_: 52.43 -44.855 900 MHz
START .300 000 MHz
STOP 3 000.000 000 MHz

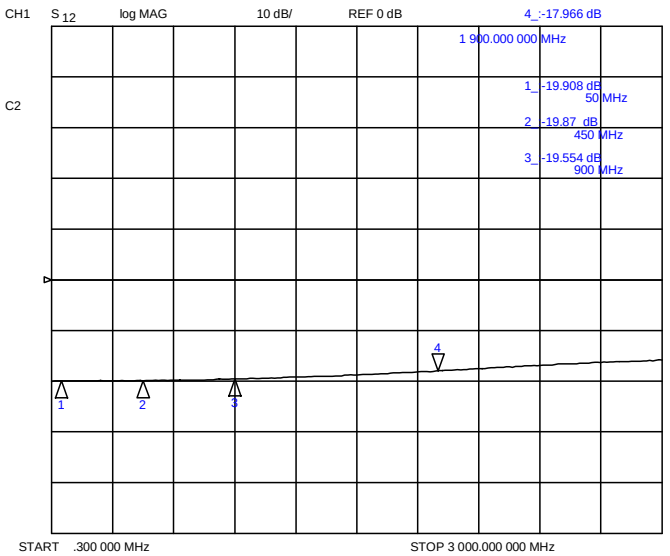
CH1 S 12 log MAG 10 dB/ REF 0 dB
4_: -17.966 dB
1 900.000 000 MHz
C2
1_: -19.908 dB 50 MHz
2_: -19.87 dB 450 MHz
3_: -19.554 dB 900 MHz
START .300 000 MHz
STOP 3 000.000 000 MHz

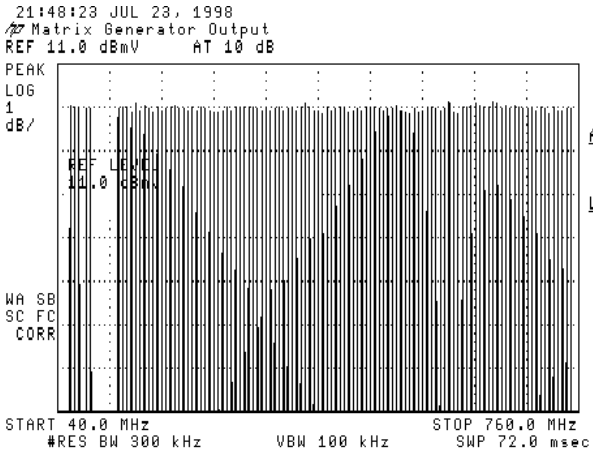
21:48:23 JUL 23, 1998
Matrix Generator Output
REF 11.0 dBmV AT 10 dB
PEAK
LOG
1
dB/
REF LEVEL
11.0 dBmV
WA SB
SC FC
CORR
START 40.0 MHz
STOP 760.0 MHz
#RES BW 300 kHz
VBW 100 kHz
SWP 72.0 msec

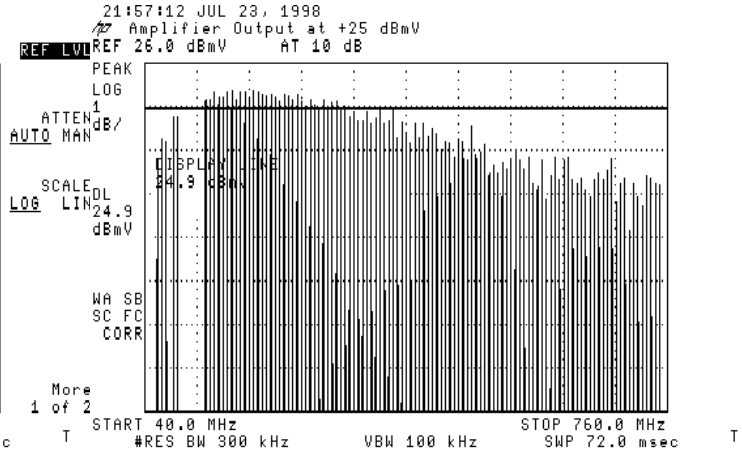
21:57:12 JUL 23, 1998
Amplifier Output at +25 dBmV
REF LVL
REF 26.0 dBmV AT 10 dB
PEAK
LOG
1
dB/
ATTEN
AUTO MAN
SCALE
LOG LIN
DL
24.9
dBmV
DISPLAY LINE
24.9 dBmV
WA SB
SC FC
CORR
More
1 of 2
START 40.0 MHz
STOP 760.0 MHz
#RES BW 300 kHz
VBW 100 kHz
SWP 72.0 msec

75 Ohms, ICC = 100 mA, Temp = 25°C

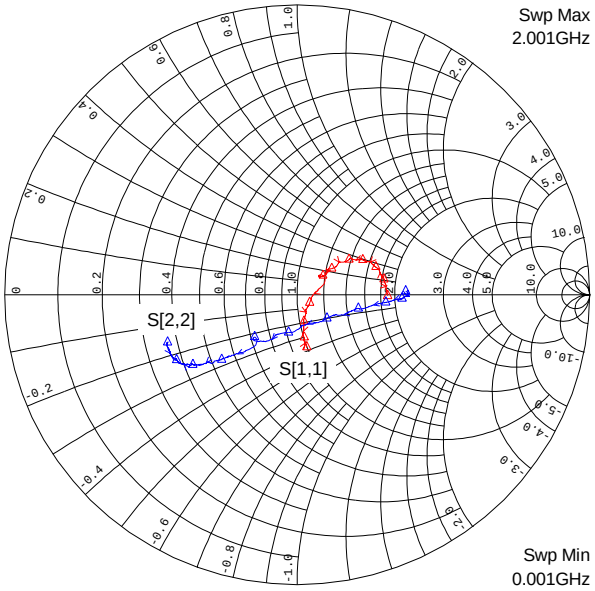
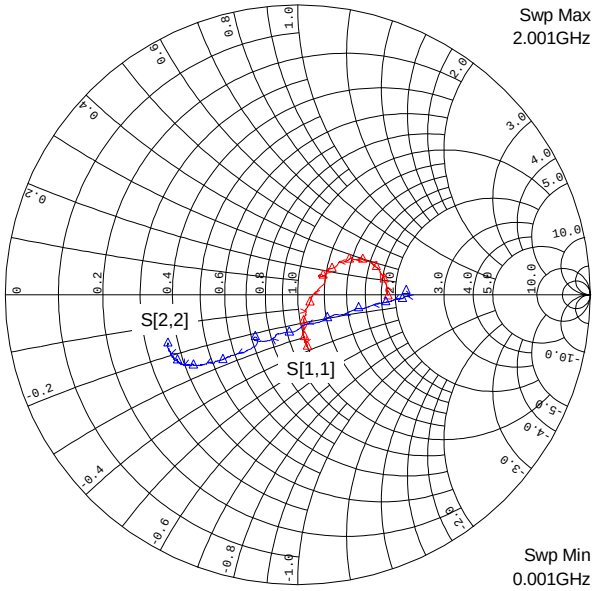
75 Ohms, ICC = 110 mA, Temp = 25°C