# GD75189/A

## QUADRUPLE LINE RECEIVERS

### Feature

- Input Resistance ... 3kΩ to 7kΩ
- Input Signal Range ... ±30V
- Fully Interchangeable with SN/75189A
- Operates from Single 5-V Supply
- Built-In Input Hysteresis (Double Thresholds)
- Response Control Provides: Input Treshold Shifting
  Input Noise Filtering
- Satisfies Requirements of EIA RS-232-C

### Pin Configuration

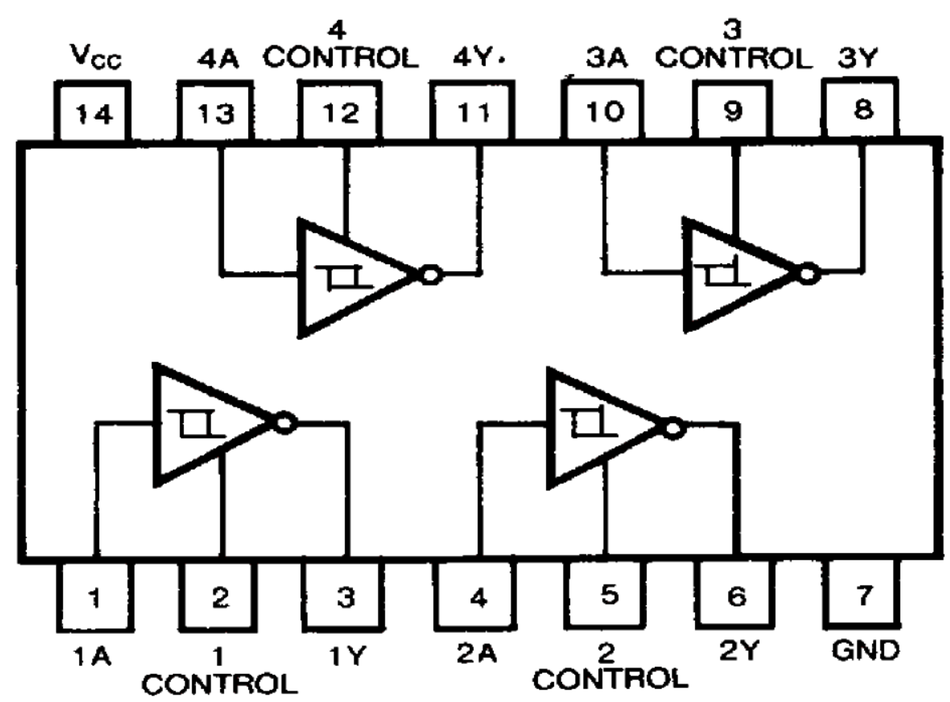


Suffix-Blank. Plastic Dual In Line Package
Suffix-J . Ceramic Dual In Line Package

### Description

The GD75189/A is monolithic quadruple line receivers designed to satisfy the requirements of the standard interface between data terminal equipment and data communication equipment as defined by EIA standard RS-232C. A separate response control terminal is provided for each receiver. A resistor or a resistor and bias voltage can be connected between this terminal and ground to shift the input threshold voltage levels. An external capacitor can be connected from this terminal to ground to provide input noise filtering.

### Schematics (each gate)

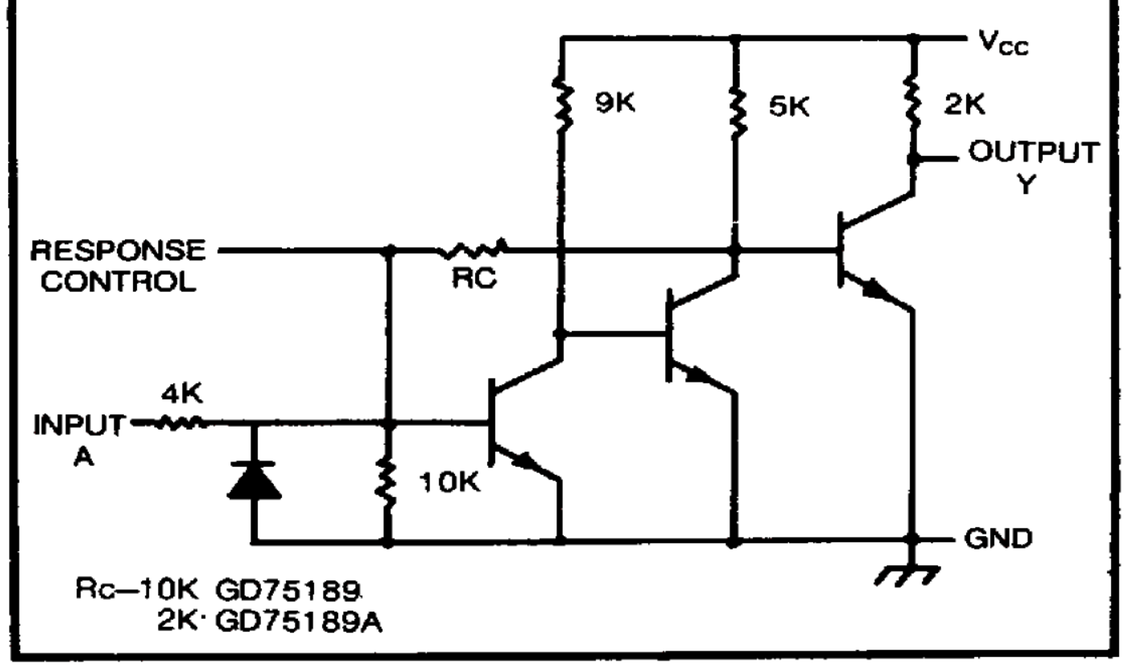


### Absolute Maximum Ratings

| | | |
|---|---|---|
| • Supply voltage | $V_{CC}$ | 10V |
| • Input voltage | $V_I$ | ±30V |
| • Output current | $V_O$ | 20 mA |
| • Continuous total dissipation at (or below) 25°C | $P_T$ | 1 W |
| • Operating free-air temperature range | $T_A$ | 0~ 175 °C |
| • Storage temperature range | $T_{STG}$ | −65~+175°C |
| • Lead temperature 1/16 inch from case for 60 seconds, J Package | | 300 °C |
| • Lead temperature 1/16 inch from case for 10 seconds, P Package | | 260 °C |

## Electrical Characteristics over recommended operating free-air temperature range ( ): GD75189A

| SYMBOL | PARAMETER | TEST FIGURE | TEST CONDITIONS† | MIN | TYP‡ | MAX | UNIT |
|---|---|---|---|---|---|---|---|
| $V_{T+}$ | Positive-going threshold voltage | 1 | | 1(1.75) | (1.9) | 1.5(2.25) | V |
| $V_{T-}$ | Negative-going threshold voltage | 1 | | 0.75 | 0.97 | 1.25 | V |
| $V_{OH}$ | High-level output voltage | 1 | $V_I$=0.75V, $I_{OH}$=−0.5mA | 2.6 | 4 | 5 | V |
| | | | Input open, $I_{OH}$=−0.5mA | 2.6 | 4 | 5 | |
| $V_{OL}$ | Low-level output voltage | 1 | $V_I$=3V, $I_{OL}$=10mA | | 0.2 | 0.45 | V |
| $I_{IH}$ | High-level input current | 2 | $V_I$=25V | 3.6 | | 8.3 | mA |
| | | | $V_I$=3V | 0.43 | | | |
| $I_{IL}$ | Low-level input current | 2 | $V_I$=−25V | −3.6 | | −8.3 | mA |
| | | | $V_I$=−3V | −0.43 | | | |
| $I_{OS}$ | Short-circuit output current | 3 | | | −3 | | mA |
| $I_{CC}$ | Supply current | 2 | $V_I$=5V, Outputs open | | 20 | 26 | mA |

† All characteristics are measured with the response control terminal open
‡ All typical values are at $V_{CC}$=5V, $T_A$=25°C

## Switching Characteristics, $V_{CC}$=5V, $T_A$=25°C

| SYMBOL | PARAMETER | TEST FIGURE | TEST CONDITIONS | MIN | TYP | MAX | UNIT |
|---|---|---|---|---|---|---|---|
| $t_{PLH}$ | Propagation delay time, low-to-high-level output | 4 | $C_L$=15pF $R_L$=3.9kΩ | | 25 | 85 | ns |
| $t_{PHL}$ | Propagation delay time, high-to-low-level output | | $C_L$=15pF, $R_L$=390Ω | | 25 | 50 | |
| $t_{TLH}$ | Transition time, low-to-high-level output | | $C_L$=15pF, $R_L$=3.9kΩ | | 120 | 175 | ns |
| $t_{THL}$ | Transition time, high-to-low-level output | | $C_L$=15pF, $R_L$=390Ω | | 10 | 20 | |

## Parameter Measurement Information

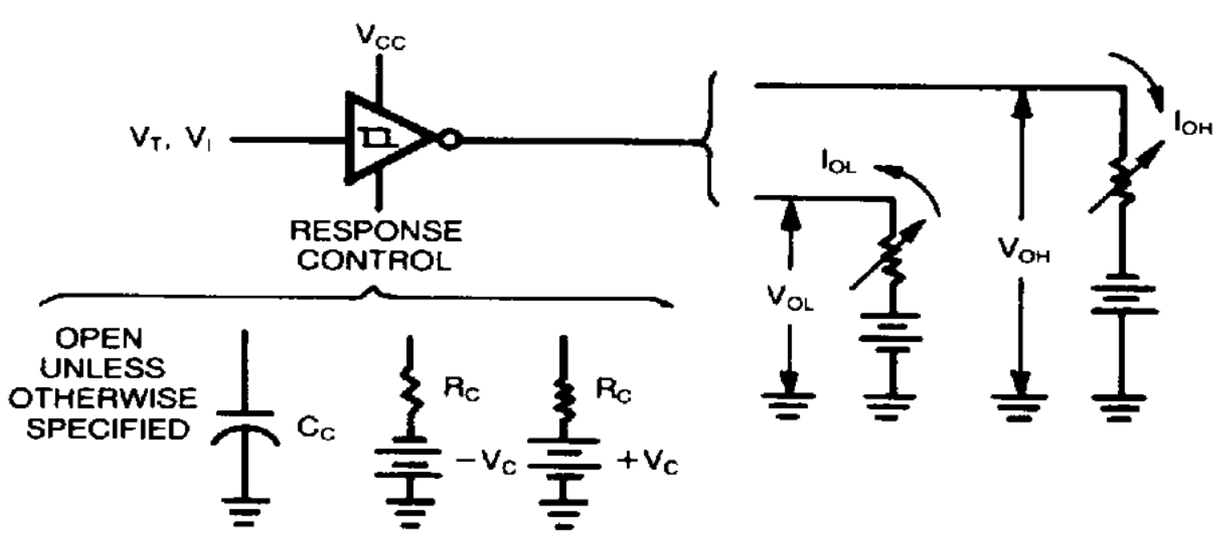


Figure 1 — $V_{T+}$, $V_{T-}$, $V_{OH}$, $V_{OL}$

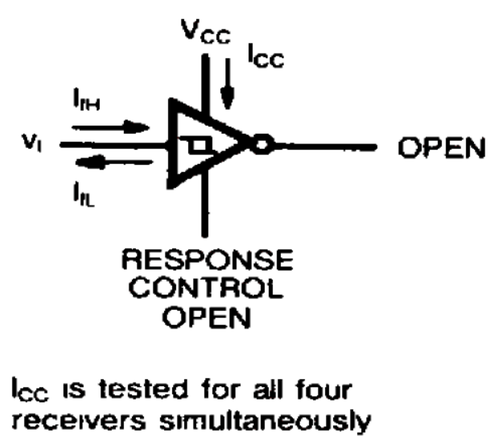


Figure 2 — $I_{IH}$, $I_{IL}$, $I_{CC}$

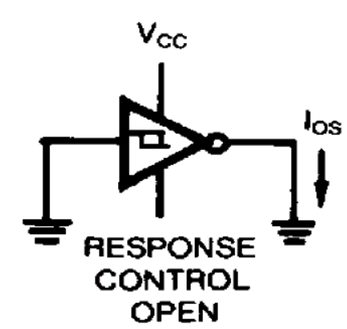


Figure 3 — $I_{OS}$

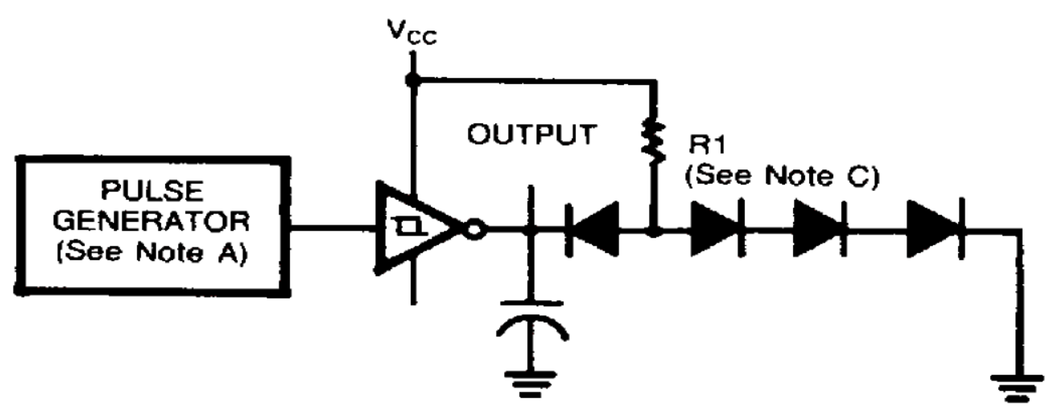


TEST CIRCUIT

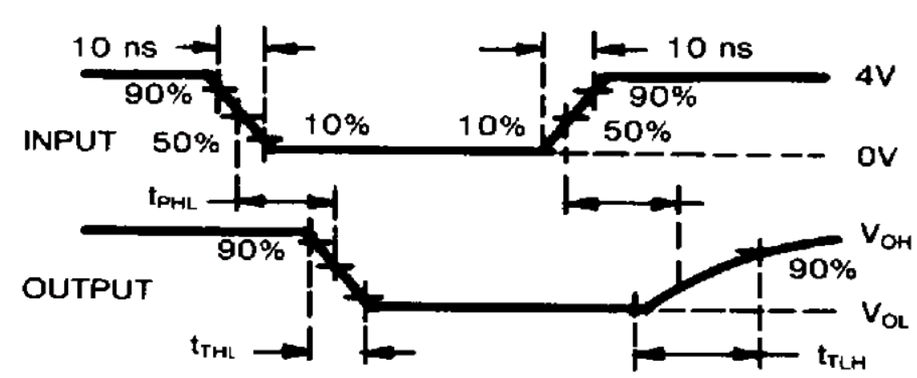


VOLTAGE WAVEFORMS

Figure 4 - Switching Times

NOTES A The pulse generator has the following characteristics $Z_{OUT}$ = 50Ω $t_w$=500ns
B $C_L$ includes probe and jig capacitance
C All diodes are 1N3064 or equivalent

Arrows indicate actual direction of current flow. Current into a terminal is a positive value

## Typical Characteristics

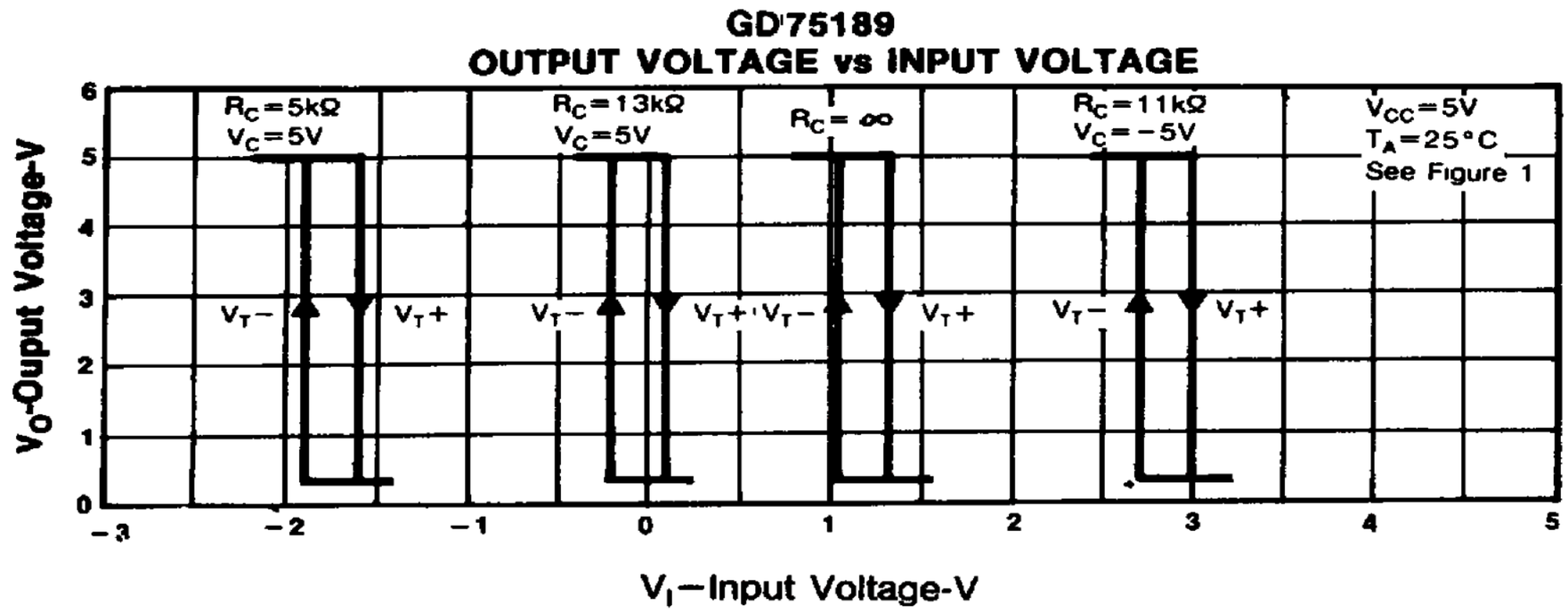


**FIGURE 5**

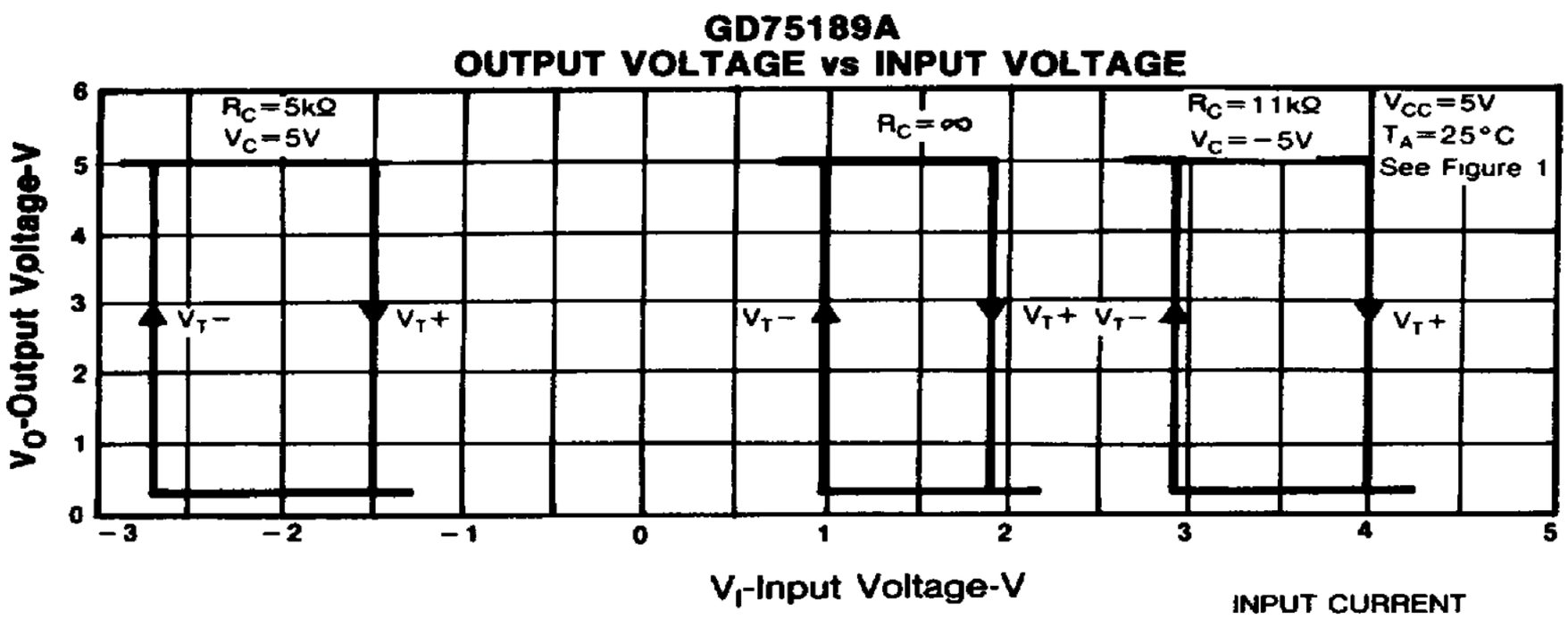


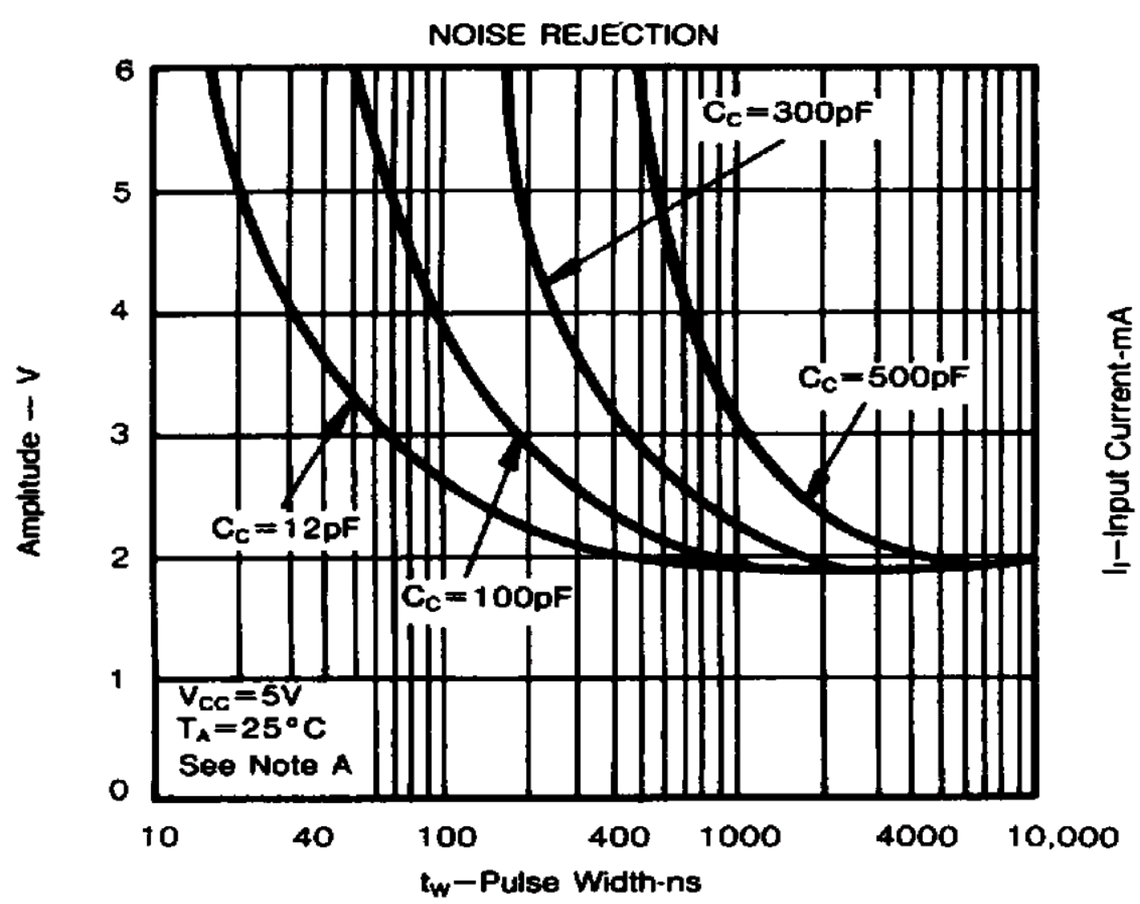


**Figure 6**

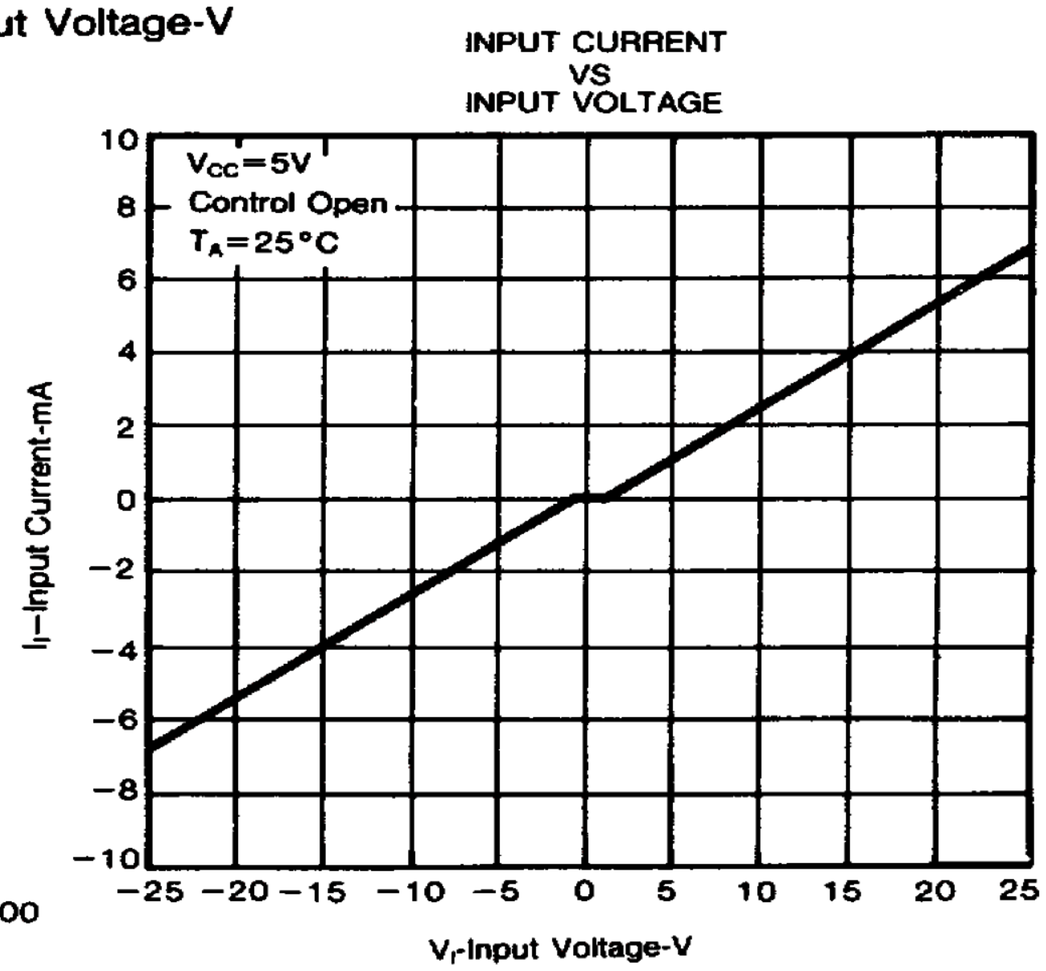


**Figure 7**

NOTE A This figure shows the maximum amplitude of a positive-going pulse that, starting from zero volts, will not cause a change of the output level