TV VERTICAL OUTPUT CIRCUIT

The KA2131 is a monolithic integrated circuit designed for the vertical output stage in color television receivers.

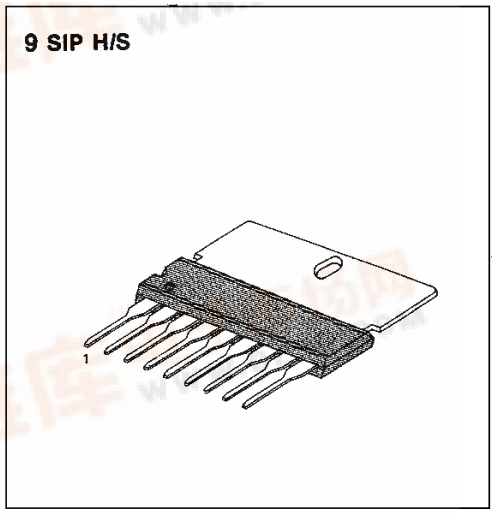

FUNCTIONS

- Driver stage.
- Output stage.
- Flyback generators.
- Pulse shapers.

FEATURES

- **Low power consumption, direct deflection coil driving capability** (Flyback voltage is two times as high as the supply voltage is supplied during flyback period only).
- **High breakdown voltage: 60V.**

ORDERING INFORMATION

Device	Package	Operating Temperature
KA2131	9 SIP H/S	−20 ~ +70°C

BLOCK DIAGRAM

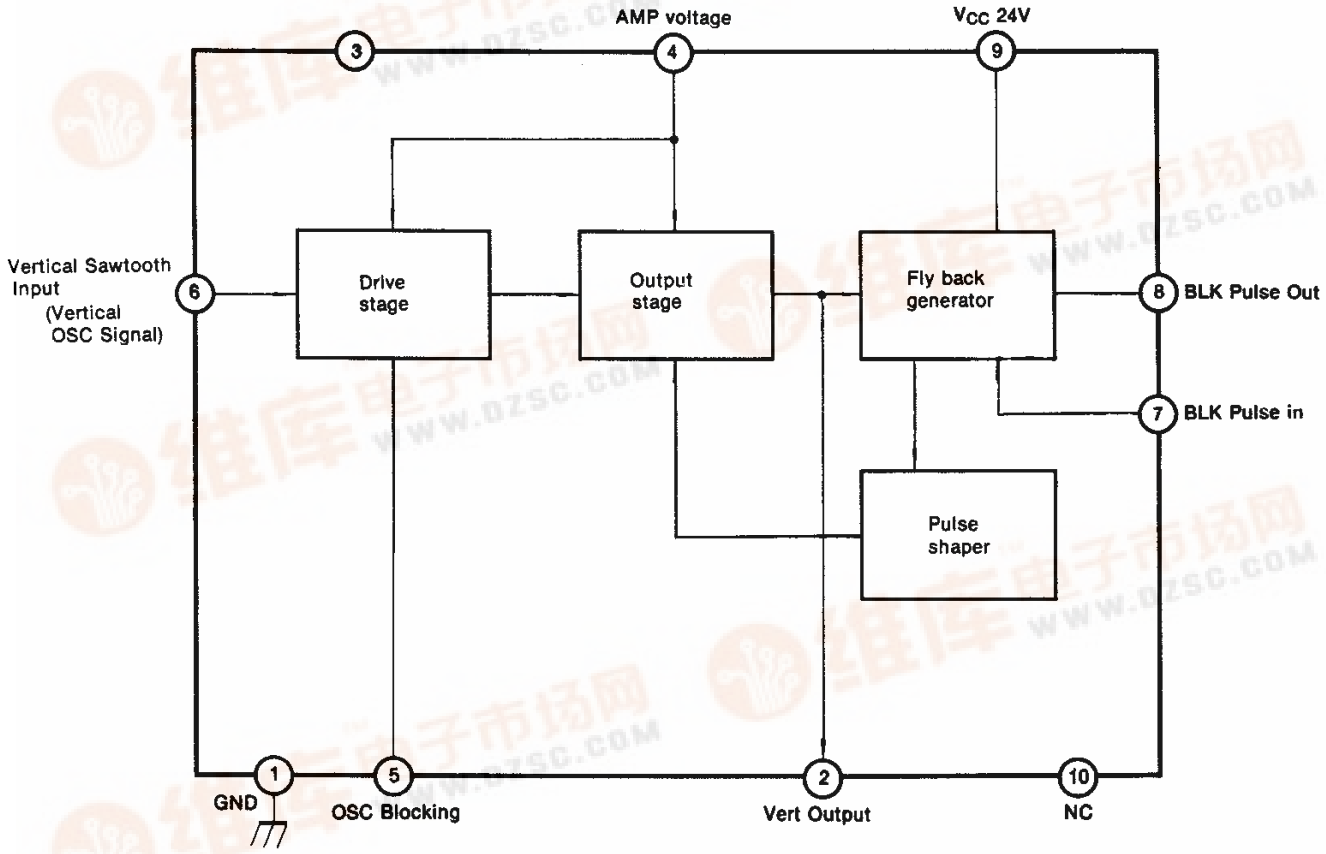

Fig. 1

ABSOLUTE MAXIMUM RATINGS

Characteristic	Symbol	Value	Unit
Supply Voltage	V_{CC}	27.6	V
Circuit Voltage	V_4	60	V
	V_6	2.5	V
	V_7	1.3	V
Supply Current	I_{CC}	250	mA
Power Dissipation	P_D	6.66	W
Circuit Current	I_2	−1000 ~ +1000	mA_{P-P}
	I_8	−1000 ~ +1000	mA_{P-P}
Operating Temperature	T_{OPR}	−20 ~ +70	°C
Storage Temperature	T_{STG}	−55 ~ +150	°C

ELECTRICAL CHARACTERISTICS

Characteristic	Symbol	Test Conditions	Min	Typ	Max	Unit
Deflection Current	IY_{P-P}	SW:2	860	930	1000	mA_{p-p}
Deflection Current Linearity	ΔIy (+)	SW: 1	25	—	75	mA_{p-p}
	ΔI_Y (−)	SW:1	22	—	85	mA_{p-p}
Deflection Current vs. Operating Temperature	$\Delta I_Y/T_A$	$T_a = -20 \sim +70°C$	−1.5	—	1.5	%
Center Voltage	V_{MID}	SW: 1	12.1	12.6	13.1	V
Flyback Pulse Amplitude	V(FBP)	SW: 1	47			V
Flyback Pulse Width	t_{FBP}	SW: 1	850	920	980	μsec
Quiescent Circuit Current	I_{CQ}	$V_4 = 24V$ $V_9 = 24V$ $V_7 = 0V$ ② 12K 7.5K ⑥ 910Ω	7	13	22	mA
Output TR Saturation Voltage	V_{4-2}	$V_4 = V_9 = 24V$, $pin_{2-1} = 56\Omega$ $V_6 = 0.3V$, $V_7 = 0V$	—	2.7	3.7	V
	V_2	$V_4 = V_9 = 24V$, $pin_{2-4} = 56\Omega$ $V_6 = 1.3V$, $V_7 = 0V$	—	0.6	1.0	V
Saturation Voltage	V_8	$V_9 = 24V$, $Rpin_{9-8} = 1.2K\Omega$ $V_7 = 0V$	—	—	0.5	V
Thermal Resistance	$R_{TH\ (J-C)}$		—	—	12	°C/W

TYPICAL APPLICATION CIRCUIT

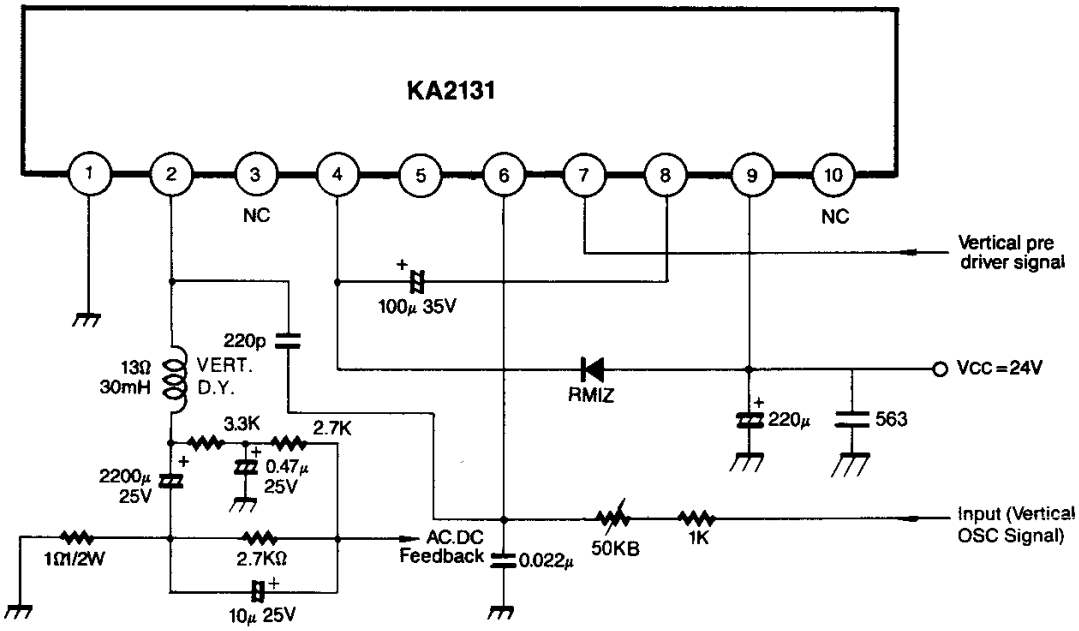

Fig. 2

TEST CIRCUIT

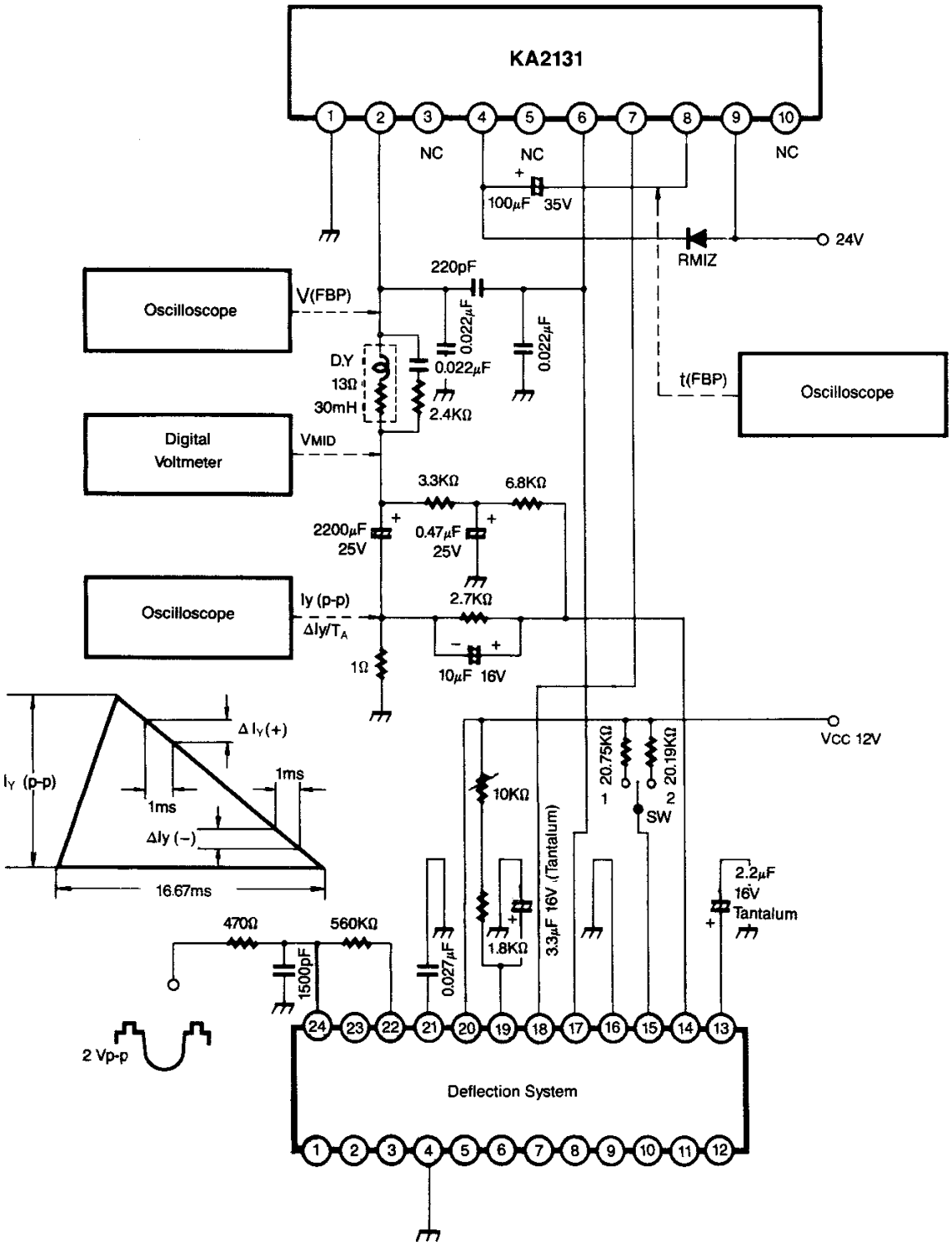

Fig. 3