查询KA3525A供应商 捷多邦，专业PCB打样工厂，24小时加急出货

KA3525A SMPS CONTROLLER

VOLTAGE-MODE PWM CONTROLLER

The KA3525A is a monolithic integrated circuit that Included all of the control circuit necessary for a pulse width modulating regulator. There are a voltage reference, an error amplifier, a pulse width modulator, an oscillator, under-voltage lockout, soft start circuit, and output drivers in the chip.

16-DIP

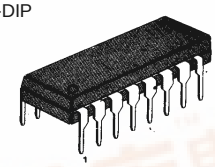

16-SOP-225A

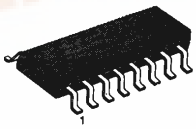

FEATURES

- 5V ± 1% Reference
- Oscillator Sync Terminal
- Internal Soft Start
- Deadtime Control
- Under-Voltage Lockout

ORDERING INFORMATION

Device	Package	Operating Temperature
KA3525A	16 DIP	-30 ~ +85℃
KA3525AD	16-SOP-225A	-30 ~ +85℃

BLOCK DIAGRAM

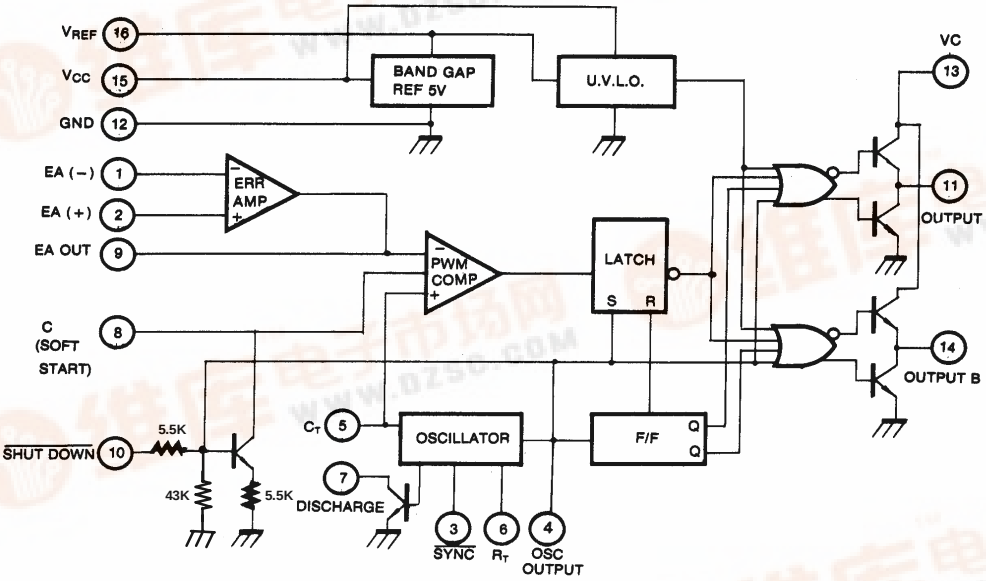

Rev. B

FAIRCHILD SEMICONDUCTOR™

©1999 Fairchild Semiconductor Corporation

找PDF 维库一下 pdf.dzsc.com

ABSOLUTE MAXIMUM RATINGS

Characteristic	Symbol	Value	Unit
Supply Voltage	V_{CC}	40	V
Collector Supply Voltage	V_C	40	V
Output Current, Sink or Source	I_O	500	mA
Reference Output Current	I_{REF}	50	mA
Oscillator Charging Current	$I_{CHG(OSC)}$	5	mA
Power Dissipation (T_A = 25℃)	P_D	1000	m/W
Operating Temperature	T_{OPR}	0 ~ +70	℃
Storage Temperature	T_{STG}	-65 ~ +150	℃
Lead Temperature (Soldering, 10 sec)	T_{LEAD}	+300	℃

ELECTRICAL CHARACTERISTICS

(V_{CC} = 20V, T_A = -35℃ to + 85℃, unless otherwise specified)

Characteristic	Symbol	Test Conditions	Min	Typ	Max	Unit
REFERENCE SECTION						
Reference Output Voltage	V_{REF}	T_J = 25℃	5.0	5.1	5.2	V
Line Regulation	ΔV_{REF}	V_{CC} = 8 to 35V		9	20	mV
Load Regulation	ΔV_{REF}	I_{REF} = 0 to 20mA		20	50	mV
Short Circuit Output Current	I_{SC}	V_{REF} = 0, T_J = 25℃		80	100	mA
Total Output Variation (Note 1)	ΔV_{REF}	Line, Load and Temperature	4.95		5.25	V
Temperature Stability (Note 1)	ST_T			20	50	mV
Long Term Stability (Note 1)	ST	T_J = 125℃, 1 KH_{RS}		20	50	mV
OSCILLATOR SECTION						
Initial Accuracy (Note 1, 2)	ACCUR	T_J = 25℃		± 3	± 6	%
Frequency Change With Voltage	$\Delta f/\Delta V_{CC}$	V_{CC} = 8 to 35V (Note 1, 2)		± 0.8	± 2	%
Maximum Frequency	$f_{(MAX)}$	R_T = 2KΩ , C_T = 470pF	400	430		KHz
Minimum Frequency	$f_{(MIN)}$	R_T = 200KΩ , C_T = 0.1μ F		60	120	Hz
Clock Amplitude (Note 1, 2)	$V_{(CLK)}$		3	4		V
Clock Width (Note 1, 2)	$t_{W(CLK)}$	T_J = 25℃	0.3	0.6	1	μ s
Sync Threshold	$V_{TH(SYNC)}$		1.2	2	2.8	V
Sync Input Current	$I_{I(SYNC)}$	Sync = 3.5V		1.3	2.5	mA

ELECTRICAL CHARACTERISTICS

(V_{CC} = 20V, T_A = -35℃ to +85℃, unless otherwise specified)

Characteristic	Symbol	Test Conditions	Min	Typ	Max	Unit
ERROR AMPLIFIER SECTION (V_{CM} = 5.1V)						
Input Offset Voltage	V_{IO}			1.5	10	mV
Input Bias Current	I_{BAIS}			1	10	μA
Input Offset Current	I_{IO}			0.1	1	μA
Open Loop Voltage Gain	G_{VO}	$R_L \geq$ 10MΩ	60	80		dB
Common Mode Rejection Ratio	CMRR	V_{CM} = 1.5 to 5.2V	60	90		dB
Power Supply Rejection Ratio	PSRR	V_{CC} = 8 to 3.5V	50	60		dB
PWM COMPARATOR SECTION						
Minimum Duty Cycle	$D_{(MIN)}$				0	%
Maximum Duty Cycle	$D_{(MAX)}$		45	49		%
Input Threshold Voltage (Note 2)	V_{TH1}	Zero Duty Cycle	0.7	0.9		V
Input Threshold Voltage (N0te 2)	V_{TH2}	Max Duty Cycle		3.2	3.6	V
SOFT-START SECTION						
Soft Start Current	I_{SOFT}	V_{SD} = 0V, V_{SS} = 0V	25	51	80	μA
Soft Start Low Level Voltage	V_{SL}	V_{SD} = 25V		0.3	0.7	V
Shutdown Threshold Voltage	$V_{TH(SD)}$		0.7	1.3	1.7	V
Shutdown Input Current	$I_{N(SD)}$	V_{SD} = 2.5V		0.3	1	mA
OUTPUT SECTION						
Low Output Voltage I	$V_{OL\ I}$	I_{SINK} = 20mA		0.1	0.4	V
Low Output Voltage II	$V_{OL\ II}$	I_{SINK} = 100mA		0.05	2	V
High Output Voltage I	$V_{CH\ I}$	I_{SOURCE} = 20mA	18	19		V
High Output Voltage II	$V_{CH\ II}$	I_{SOURCE} = 100mA	17	18		V
Under Voltage Lockout	V_{UV}	V_8 and V_9 = High	6	7	8	V
Collector Leakage Current	I_{LKG}	V_{CC} = 35V		80	200	μA
Rise Time (Note 1)	t_R	C_L = 1μF, T_J = 26℃		80	600	nS
Fall Time (Note 1)	t_F	C_L = 1μF, T_J = 25℃		70	300	nS
STANDBY CURRENT						
Supply Cuttent	I_{CC}	V_{CC} = 35V		12	20	mA

(Note)
1. These parameters. although guaranteed over the recommended operating conditions, are not 100% tested in production
2. Tested at f_{OSC}=40 KHz (R_T =3.6K, C_T =0.01μF, R_I = 0Ω)

TEST CIRCUIT

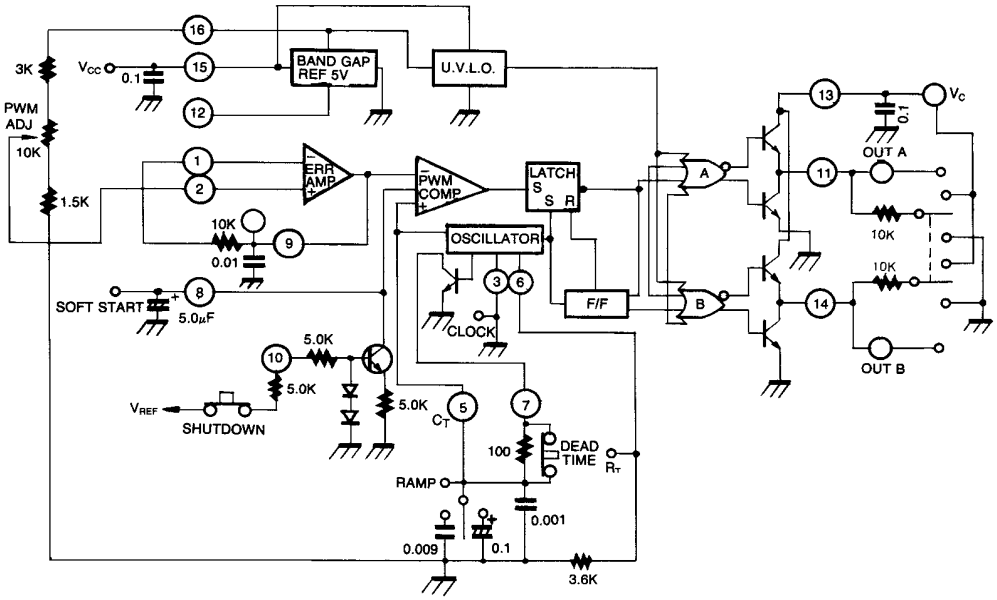

TRADEMARKS

The following are registered and unregistered trademarks Fairchild Semiconductor owns or is authorized to use and is not intended to be an exhaustive list of all such trademarks.

ACEx™
CoolFET™
CROSSVOLT™
E^2CMOS™
FACT™
FACT Quiet Series™
FAST®
FASTr™
GTO™
HiSeC™
ISOPLANAR™
MICROWIRE™
POP™
PowerTrench™
QS™
Quiet Series™
SuperSOT™-3
SuperSOT™-6
SuperSOT™-8
TinyLogic™
UHC™
VCX™

DISCLAIMER

FAIRCHILD SEMICONDUCTOR RESERVES THE RIGHT TO MAKE CHANGES WITHOUT FURTHER NOTICE TO ANY PRODUCTS HEREIN TO IMPROVE RELIABILITY, FUNCTION OR DESIGN. FAIRCHILD DOES NOT ASSUME ANY LIABILITY ARISING OUT OF THE APPLICATION OR USE OF ANY PRODUCT OR CIRCUIT DESCRIBED HEREIN; NEITHER DOES IT CONVEY ANY LICENSE UNDER ITS PATENT RIGHTS, NOR THE RIGHTS OF OTHERS.

LIFE SUPPORT POLICY

FAIRCHILD'S PRODUCTS ARE NOT AUTHORIZED FOR USE AS CRITICAL COMPONENTS IN LIFE SUPPORT DEVICES OR SYSTEMS WITHOUT THE EXPRESS WRITTEN APPROVAL OF FAIRCHILD SEMICONDUCTOR CORPORATION.
As used herein:

1. Life support devices or systems are devices or systems which, (a) are intended for surgical implant into the body, or (b) support or sustain life, or (c) whose failure to perform when properly used in accordance with instructions for use provided in the labeling, can be reasonably expected to result in significant injury to the user.

2. A critical component is any component of a life support device or system whose failure to perform can be reasonably expected to cause the failure of the life support device or system, or to affect its safety or effectiveness.

PRODUCT STATUS DEFINITIONS

Definition of Terms

Datasheet Identification	Product Status	Definition
Advance Information	Formative or In Design	This datasheet contains the design specifications for product development. Specifications may change in any manner without notice.
Preliminary	First Production	This datasheet contains preliminary data, and supplementary data will be published at a later date. Fairchild Semiconductor reserves the right to make changes at any time without notice in order to improve design.
No Identification Needed	Full Production	This datasheet contains final specifications. Fairchild Semiconductor reserves the right to make changes at any time without notice in order to improve design.
Obsolete	Not In Production	This datasheet contains specifications on a product that has been discontinued by Fairchild semiconductor. The datasheet is printed for reference information only.