查询KA3882供应商 捷多邦，专业PCB打样工厂，24小时加急出货

KA3882/3/4/5 SMPS CONTROLLER

CURRENT MODE PWM CONTROLLER

The KA3882/3/4/5 are fixed PWM controller for Off-Line and DC to DC converter applications. The internal circuits include UVLO, low start up current circuit, temperature compensated reference, high gain error amplifier, current sensing comparator, and high current totempole output for driving a POWER MOSFET. Also KA 3882/3/4/5 provide low start up current below 0.3mA and short shutdown delay time typ. 100ns.
The KA3882 and KA3884 have UVLO threshold of 1 6V(on) and 10V(off).
The KA3883 and KA3885 are 8.4V(on) and 7.6V(off).
The KA3882 and KA3883 can operate within 100% duty cycle.
The KA3884 and KA3885 within 50% by using T Flip-Flop.

8 DIP

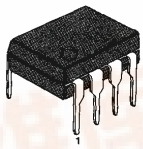

8 SOP

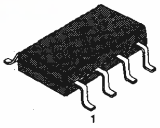

FEATURES

- Low Start Current 0.2mA (typ)
- Operating Range Up To 500KHz
- Cycle by Cycle Current Limiting
- Under Voltage Lock Out With Hysteresis
- Short Shutdown Delay Time: typ.100ns
- High Current Totempole Output
- Output Swing Limiting: 22V

ORDERING INFORMATION

Device	Package	Operating Temperature
KA388X	8 DIP	0 ~ + 85℃
KA388XD	8 SOP	0 ~ + 85℃

BLOCK DIAGRAM

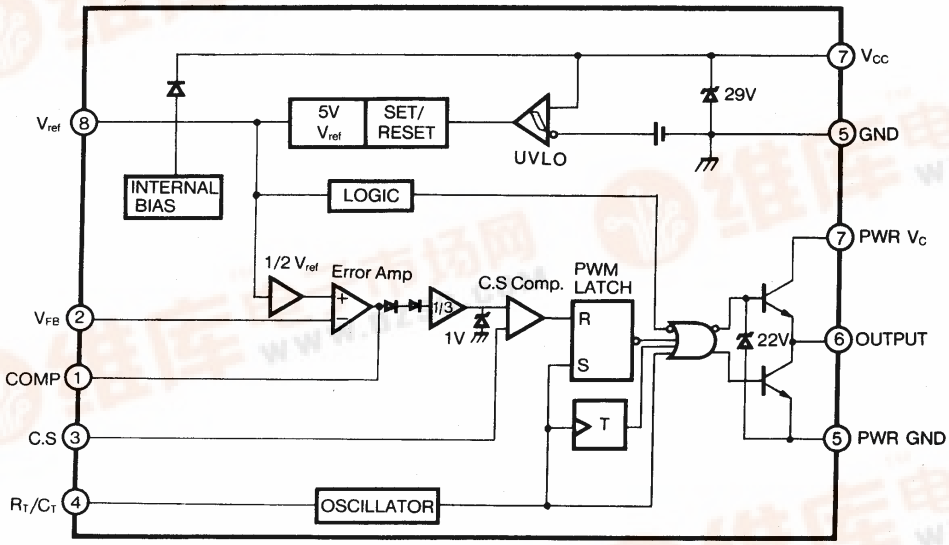

Rev. B

FAIRCHILD SEMICONDUCTOR™

©1999 Fairchild Semiconductor Corporation

找PDF 维库一下 pdf.dzsc.com

ABSOLUTE MAXIMUM RATINGS

Characteristic	Symbol	Value	Unit
Supply Voltage	V_{CC}	30	V
Output Current	I_O	+ 1	A
Analog Inputs (pin 2, 3)	$V_{I(ANA)}$	- 0.3 to 6.3	V
Error Amp. Output Sink Current	$I_{SINK(EA)}$	10	mA
Power Dissipation	P_D	1	W

ELECTRICAL CHARACTERISTICS

(V_{CC} = 15V, R_T = 10KΩ , C_T = 3.3nF, T_A = 0℃ to + 85℃ , Unless otherwise specified)

Characteristic	Symbol	Test Conditions	Min	Typ	Max	Unit
REFERENCE SECTION						
Output Voltage	V_{REF}	T_J = 25℃ , I_O = 1mA	4.9	5.0	5.1	V
Line Regulation	ΔV_{REF}	V_{CC} = 12V to 25V	–	6	20	mV
Load Regulation	ΔV_{REF}	I_O = 1mA to 20mA	–	6	25	mV
Output Short Circuit	I_{SC}	T_a = 25℃	–	- 100	- 180	mA
OSILLATOR SECTION						
Initial Accuracy	F_{OSC}	T_J = 25℃	47	52	57	KHz
Voltage Stability	ST_V	V_{CC} = 12V to 25V	–	0.2	1	%
Amplitude	V_{OSC}	V_{PIN4}, Peak to Peak	–	1.7	–	V
Discharge Current	I_{DISCHG}	T_J = 25℃ , Pin4 = 2V	7.8	8.3	8.8	mA
CURRENT SENSE SECTION						
Gain	G_V	(NOTE 2, 3)	2.85	3	3.15	V/V
Maximum Input Signal	$V_{I(MAX)}$	V_{PIN1} = 5V(NOTE 2)	0.9	1.0	1.1	V
PSRR	PSRR	V_{CC} = 12V to 25V (NOTE 1, 2)	–	70	–	dB
Input Bias Current	I_{BIAS}	–	–	- 2	-10	uA
Delay to Output	T_D	V_{PIN3} = 0V to 2V (NOTE1)	–	100	200	ns

ELECTRICAL CHARACTERISTICS(Continued)

(V_{CC} = 15V, R_T = 10KΩ , C_T = 3.3nF, T_A = 0℃ to + 85℃, Unless otherwise specified)

Characteristic	Symbol	Test Conditions	Min	Typ	Max	Unit
ERROR AMPLIFIER SECTION						
Input Voltage	V_I	T_{PIN1} = 2.5V	2.42	2.50	2.58	V
Input Bias Current	I_{BIAS}	-	-	-0.3	- 2	uA
Open Loop Gain	G_{VO}	V_O = 2V to 4V (NOTE 1)	65	90	-	dB
Unity Gain Bandwidth	GBW	T_J= 25℃ (NOTE 1)	0.7	1	-	MHz
PSRR	PSRR	V_{CC} = 12V to 25V (NOTE 1)	60	70	-	dB
Output Sink Current	I_{SINK}	V_{PIN2} = 2.7V V_{PIN1} = 1.1V	2	6	-	mA
Output Source Current	I_{SOURCE}	V_{PIN2} = 2.3V V_{PIN1} = 5.0V	-0.5	-0.8	-	mA
Output High Voltage	V_{OH}	V_{PIN2} = 2.3V R1 = 15KΩ to GND	5	6	-	V
Output Low Voltage	V_{OL}	V_{PIN2} = 2.7V R1 = 15KΩ to Pin8	-	0.8	1.1	V
OUTPUT SECTION						
Output Low Level	V_{OL}	I_{SINK} = 20mA	-	0.1	0.4	V
		I_{SINK} = 200mA	-	1.5	2.2	V
Output High Level	V_{OH}	I_{SOURCE} = 20mA	13	13.5	-	V
		I_{SOURCE} = 200mA	12	13.5	-	V
Rise Time	t_R	T_J = 25℃, C1 = 1nF (NOTE 1)	-	40	100	ns
Fall Time	t_F	T_J = 25℃, C1 = 1nF (NOTE 1)	-	40	100	ns
Output Voltage Swing Limit	V_{OLIM}	V_{CC} = 27V, C1 = 1nF	-	22	-	V
UNDER VOLTAGE LOCKOUT SECTION						
Start Threshold	V_{TH}	KA3882/4	15	16	17	V
		KA3883/5	7.8	8.4	9.0	V
Min.Operating Voltage (After turn on)	V_{TL}	KA3882/4	9	10	11	V
		KA3883/5	7.0	7.6	8.2	V

ELECTRICAL CHARACTERISTICS(Continued)

(V_{CC} = 15V, R_T = 10KΩ , C_T = 3.3nF, T_A = 0℃ to +85℃ , unless otherwise specified)

Characteristic	Symbol	Test Conditions	Min	Typ	Max	Unit
PWM SECTION						
Maximum Duty Cycle	D_{MAX}	KA3882/3	94	96	100	%
		KA3884/5	47	48	50	%
Minimum Duty Cycle	D_{MIN}	-	-	-	0	%
TOTAL STANDBY CURRENT						
Start-Up Current	I_{ST}	-	-	0.2	0.4	mA
Operating Supply Current	I_{CC}	V_{PIN2} = V_{PIN3} = 0V	-	11	17	mA
V_{CC} Zener Voltage	V_Z	I_{CC} = 25mA	-	29	-	V

∗ Adjust V_{CC} above the start threshold bifore setting at 15V

NOTE 1. These parameters, although guaranteed, are not 100% tested in production.

2. Parameter measured at trip point of latch with V2 = 0V.

3. Gain defined as: G_V = Δ V_{PIN1}Δ V_{PIN3}(V_{PIN3} = 0 to 0.8V)

TRADEMARKS

The following are registered and unregistered trademarks Fairchild Semiconductor owns or is authorized to use and is not intended to be an exhaustive list of all such trademarks.

ACEx™
CoolFET™
CROSSVOLT™
E^2CMOS™
FACT™
FACT Quiet Series™
FAST®
FASTr™
GTO™
HiSeC™
ISOPLANAR™
MICROWIRE™
POP™
PowerTrench™
QS™
Quiet Series™
SuperSOT™-3
SuperSOT™-6
SuperSOT™-8
TinyLogic™
UHC™
VCX™

DISCLAIMER

FAIRCHILD SEMICONDUCTOR RESERVES THE RIGHT TO MAKE CHANGES WITHOUT FURTHER NOTICE TO ANY PRODUCTS HEREIN TO IMPROVE RELIABILITY, FUNCTION OR DESIGN. FAIRCHILD DOES NOT ASSUME ANY LIABILITY ARISING OUT OF THE APPLICATION OR USE OF ANY PRODUCT OR CIRCUIT DESCRIBED HEREIN; NEITHER DOES IT CONVEY ANY LICENSE UNDER ITS PATENT RIGHTS, NOR THE RIGHTS OF OTHERS.

LIFE SUPPORT POLICY

FAIRCHILD'S PRODUCTS ARE NOT AUTHORIZED FOR USE AS CRITICAL COMPONENTS IN LIFE SUPPORT DEVICES OR SYSTEMS WITHOUT THE EXPRESS WRITTEN APPROVAL OF FAIRCHILD SEMICONDUCTOR CORPORATION.
As used herein:

1. Life support devices or systems are devices or systems which, (a) are intended for surgical implant into the body, or (b) support or sustain life, or (c) whose failure to perform when properly used in accordance with instructions for use provided in the labeling, can be reasonably expected to result in significant injury to the user.

2. A critical component is any component of a life support device or system whose failure to perform can be reasonably expected to cause the failure of the life support device or system, or to affect its safety or effectiveness.

PRODUCT STATUS DEFINITIONS

Definition of Terms

Datasheet Identification	Product Status	Definition
Advance Information	Formative or In Design	This datasheet contains the design specifications for product development. Specifications may change in any manner without notice.
Preliminary	First Production	This datasheet contains preliminary data, and supplementary data will be published at a later date. Fairchild Semiconductor reserves the right to make changes at any time without notice in order to improve design.
No Identification Needed	Full Production	This datasheet contains final specifications. Fairchild Semiconductor reserves the right to make changes at any time without notice in order to improve design.
Obsolete	Not In Production	This datasheet contains specifications on a product that has been discontinued by Fairchild semiconductor. The datasheet is printed for reference information only.