查询KID65004AP供应商 捷多邦，专业PCB打样工厂，24小时加急出货

KEC

SEMICONDUCTOR

TECHNICAL DATA

KID65001AP/AF ~ KID65004AP/AF

BIPOLAR DIGITAL INTEGRATED CIRCUIT

7 CIRCUIT DARLINGTON TRANSISTOR ARRAY

FEATURES

- Output Current : 500mA Max.
- High Sustaining Voltage Outputs : 50V Min.
- Output Clamp Diodes
- Inputs Compatible With Various Types of Logic.
- PKG Type AP : DIP-16Pin, AF : FLP-16Pin

TYPE	INPUT RESISTOR	DESIGNATION
KID65001AP/AF	No (External)	General Purpose
KID65002AP/AF	Zener Diode 7V+10.5kΩ	14~25V P-MOS
KID65003AP/AF	2.7kΩ	TTL, 5V C-MOS
KID65004AP/AF	10.5kΩ	6~15V P-MOS, C-MOS

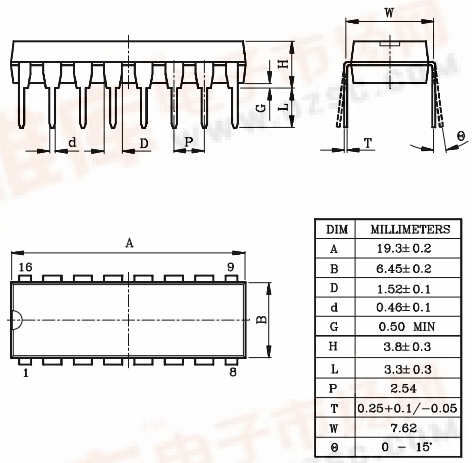

DIM	MILLIMETERS
A	19.3± 0.2
B	6.45± 0.2
D	1.52± 0.1
d	0.46± 0.1
G	0.50 MIN
H	3.8± 0.3
L	3.3± 0.3
P	2.54
T	0.25+0.1/−0.05
W	7.62
θ	0 ~ 15°

DIP-16

DESCRIPTION:

The KID65001AP/AF Series are high-voltage, high-current darlington transistor array comprised of seven NPN darlington pairs. All units feature internal clamp diodes for switching inductive loads.

MAXIMUM RATINGS (Ta=25℃, unless otherwise noted)

CHARACTERISTIC		SYMBOL	RATING	UNIT
Output Sustaining Voltage		$V_{CE(SUS)}$	50	V
Output Current		I_{OUT}	500	mA
Input Voltage		V_{IN}*	-0.5~+30	V
Input Current		I_{IN}**	25	mA
Clamp Diode	Reverse Voltage	V_R	50	V
	Forward Current	I_F	500	mA
GND Terminal Current		I_{GND}	2.8	A
Power Dissipation	AP	P_D	1.47	W
	AF		0.54	W
Operating Temperature		T_{opr}	-40~85	℃
Storage Temperature		T_{stg}	-55~150	℃

*Except KID65001AP/AF, **Only KID65001AP/AF

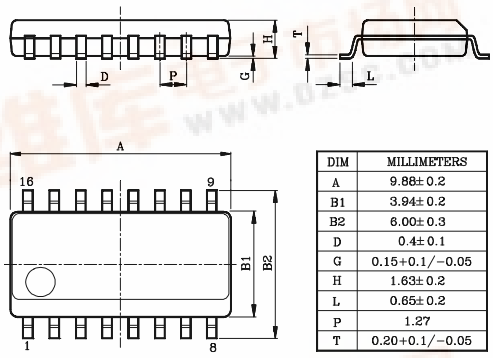

DIM	MILLIMETERS
A	9.88± 0.2
B1	3.94± 0.2
B2	6.00± 0.3
D	0.4± 0.1
G	0.15+0.1/−0.05
H	1.63± 0.2
L	0.65± 0.2
P	1.27
T	0.20+0.1/−0.05

FLP-16

找PDF 维库一下 pdf.dzsc.com

PIN CONNECTION (TOP VIEW)

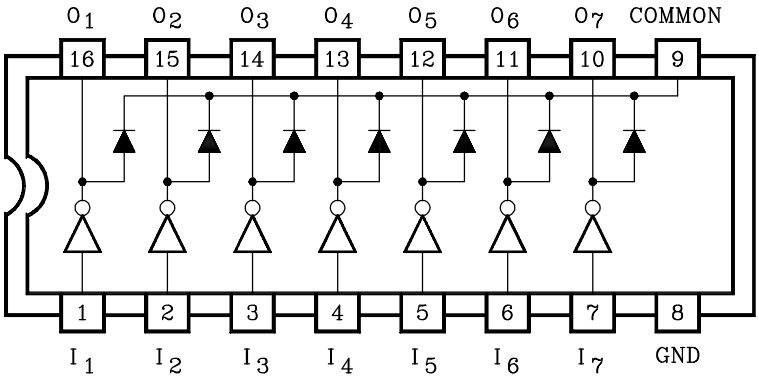

SCHEMATICS (EACH DRIVER)

KID65001AP/AF

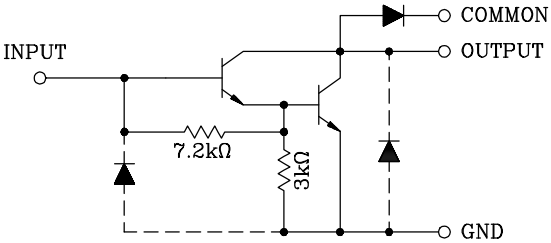

KID65002AP/AF

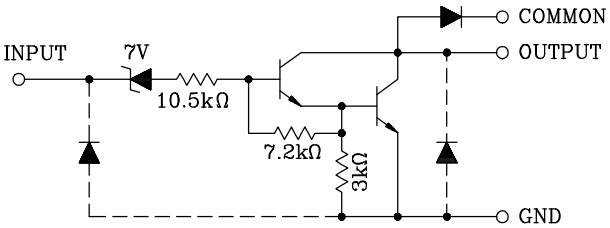

KID65003AP/AF

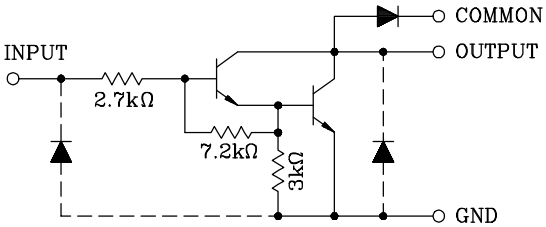

KID65004AP/AF

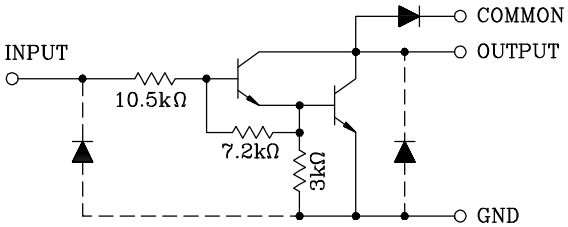

KID65001AP/AF～KID65004AP/AF

RECOMMENDED OPERATING CONDITIONS (Ta=-40～85℃)

CHARACTERISTIC		SYMBOL	CONDITION	MIN.	TYP.	MAX.	UNIT
Output Sustaining Voltage		$V_{CE(SUS)}$		0	-	50	V
Output Current		I_{OUT}	T_{PW}=25ms, DF=10%, 7 Circuits	0	-	400	mA
			T_{PW}=25ms, DF=30%, 7 Circuits	0	-	200	
Input Voltage		V_{IN}	Except KID65001AP/AF	0	-	30	V
Input Current		I_{IN}	Only KID65001AP/AF	0	-	5	mA
Clamp Diode Reverse Voltage		V_R		-	-	50	V
Clamp Diode Forward Current		I_F		-	-	400	mA
Power Dissipation	AP	P_D		-	-	0.52	W
	AF		Ta=Topr(max) *	-	-	0.32	

* : on glass epoxy PCB (30×30×1.6mm Cu50%)

ELECTRICAL CHARACTERISTICS (Ta=25℃, unless otherwise noted)

CHARACTERISTICS		SYMBOL	TEST CIRCUIT	TEST CONDITION	MIN.	TYP.	MAX.	UNIT
Output Leak Current		I_{CEX}	1	V_{CE}=50V, Ta=25℃	-	-	50	μA
				V_{CE}=50V, Ta=85℃	-	-	100	
	KID65002AP/AF			V_{CE}=50V, V_{IN}=6V	-	-	500	
	KID65004AP/AF			V_{CE}=50V, V_{IN}=1V	-	-	500	
Collector-Emitter Saturation Voltage		$V_{CE(sat)}$	2	I_{OUT}=350mA, I_{IN}=500μA	-	1.3	1.6	V
				I_{OUT}=200mA, I_{IN}=350μA	-	1.1	1.3	
				I_{OUT}=100mA, I_{IN}=250μA	-	0.9	1.1	
Input Current	KID65002AP/AF	$I_{IN(ON)}$	3	V_{IN}=17V	-	0.82	1.25	mA
	KID65003AP/AF			V_{IN}=3.85V	-	0.93	1.35	
	KID65004AP/AF			V_{IN}=5V	-	0.35	0.5	
				V_{IN}=12V	-	1.0	1.45	
		$I_{IN(OFF)}$	4	I_{OUT}=500μA, Ta=85℃	50	65	-	μA
Input Voltage	KID65002AP/AF	$V_{IN(ON)}$	5	V_{CE}=2V, I_{OUT}=300mA	-	-	13	V
	KID65003AP/AF			V_{CE}=2V, I_{OUT}=200mA	-	-	2.4	
				V_{CE}=2V, I_{OUT}=250mA	-	-	2.7	
				V_{CE}=2V, I_{OUT}=300mA	-	-	3.0	
	KID65004AP/AF			V_{CE}=2V, I_{OUT}=125mA	-	-	5.0	
				V_{CE}=2V, I_{OUT}=200mA	-	-	6.0	
				V_{CE}=2V, I_{OUT}=275mA	-	-	7.0	
				V_{CE}=2V, I_{OUT}=350mA	-	-	8.0	
DC Current Transfer Ratio		h_{FE}	2	V_{CE}=2V, I_{OUT}=350mA	1000	-	-	
Clamp Diode Reverse Current		I_R	6	V_R=50V, Ta=25℃	-	-	50	μA
				V_R=50V, Ta=85℃	-	-	100	
Clamp Diode Forward Voltage		V_F	7	I_F=350mA	-	-	2.0	V
Input Capacitance		C_{IN}			-	15	-	pF
Turn-ON Delay		t_{ON}	8	V_{OUT}=50V, R_L=163Ω C_L=15pF	-	0.1	-	μS
Turn-OFF Delay		t_{OFF}			-	0.2	-	

TEST CIRCUIT

1. I_{CEX}

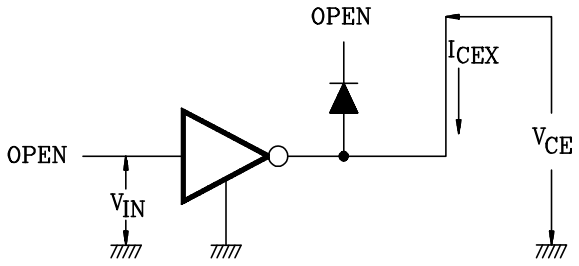

2. $V_{CE(sat)}$, h_{FE}

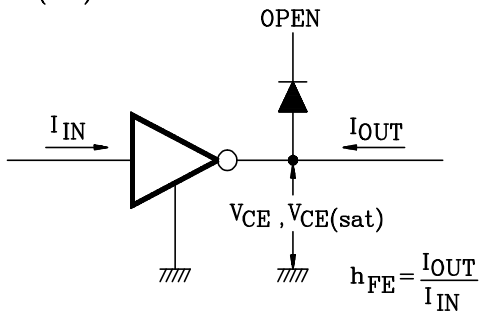

3. $I_{IN(ON)}$

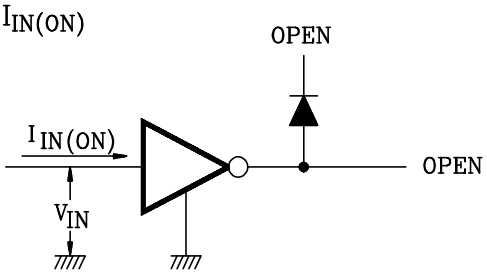

4. $I_{IN(OFF)}$

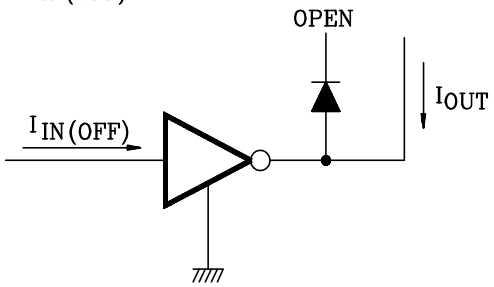

5. $V_{IN(ON)}$

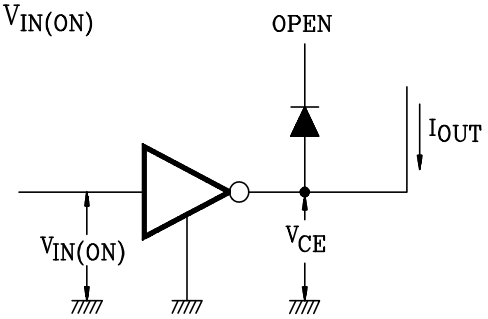

6. I_R

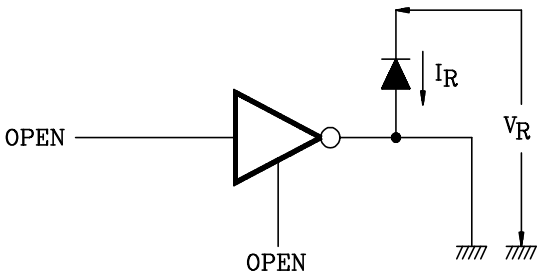

7. V_F

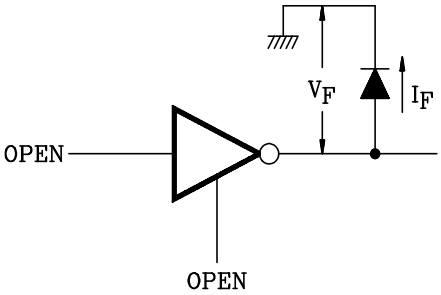

8. t_{ON} , t_{OFF}

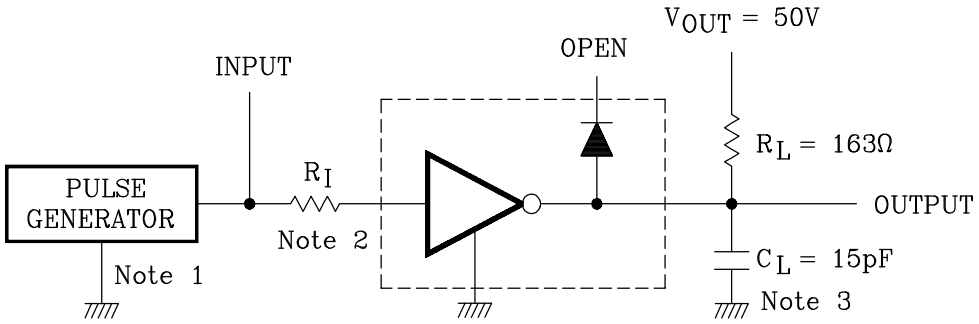

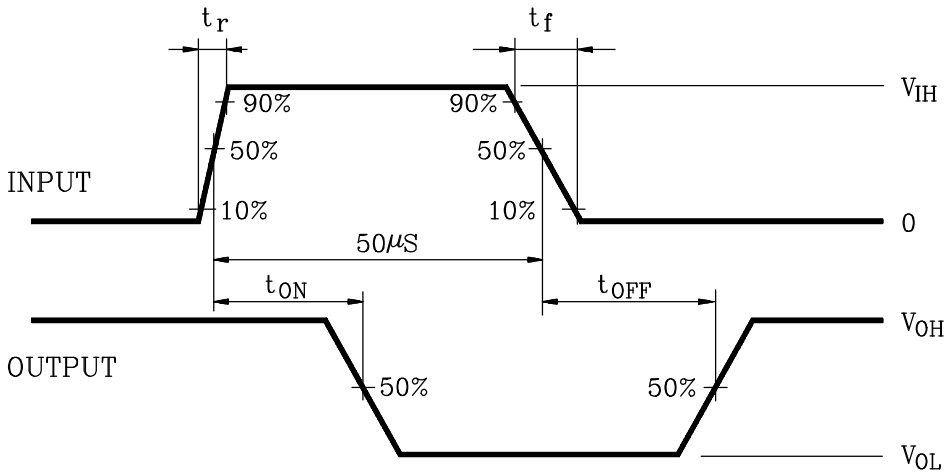

Notes : 1. Pulse Width 50μS, Duty Cycle 10%
Output Impedance 50Ω, $t_r \leqq 5ns$, $t_f \leqq 10ns$

2. See below

Input Conditions

Type Number	R_I	V_{IH}
KID65001AP/AF	2.7kΩ	3V
KID65002AP/AF	0	13V
KID65003AP/AF	0	3V
KID65004AP/AF	0	8V

3. C_L includes probe and Jig capacitance.

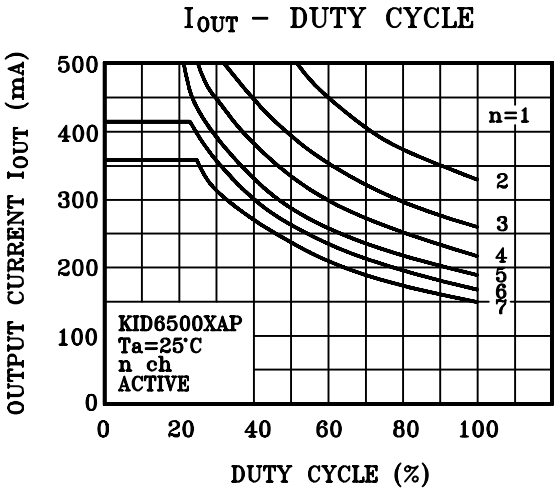

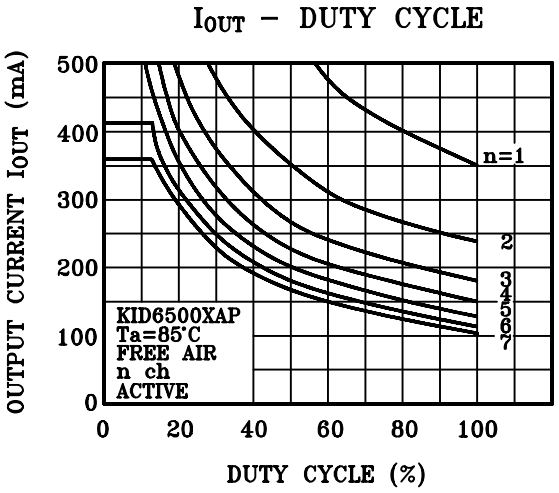

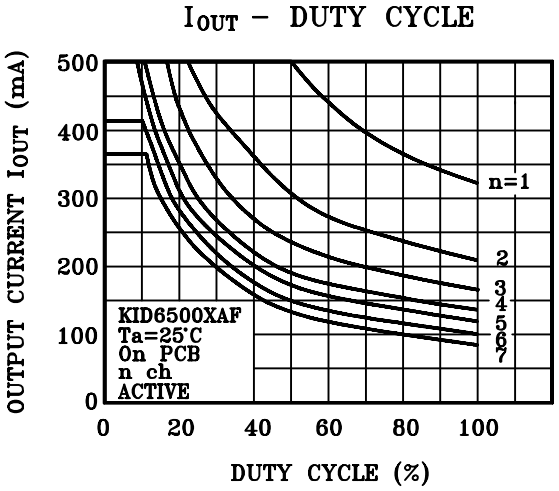

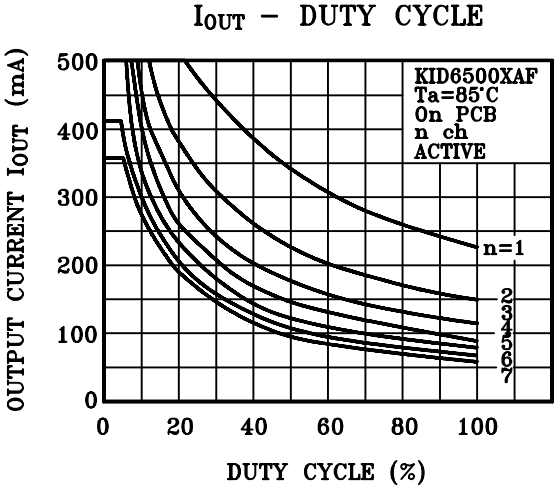

KID65002AP/AF

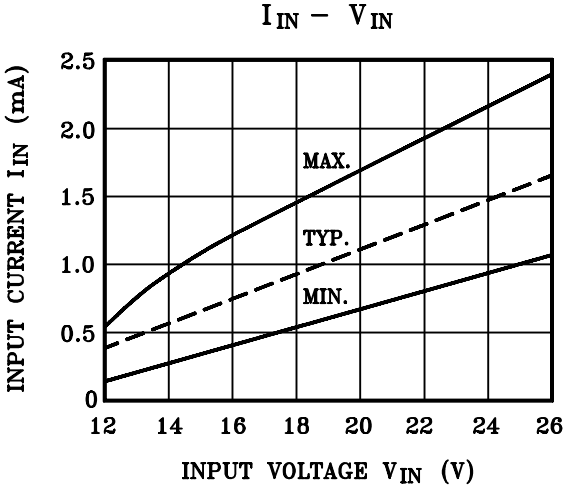

KID65003AP/AF

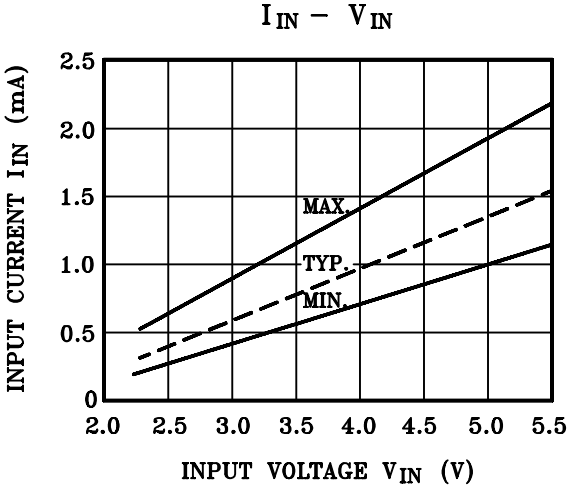
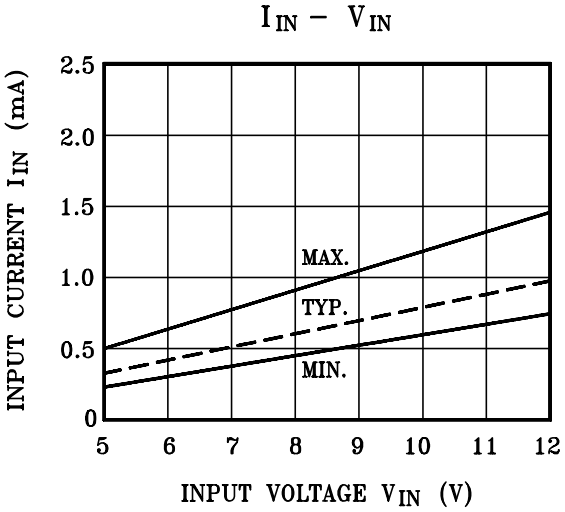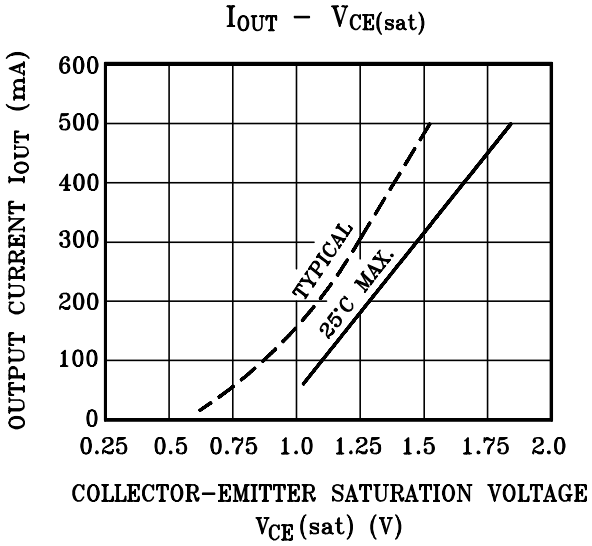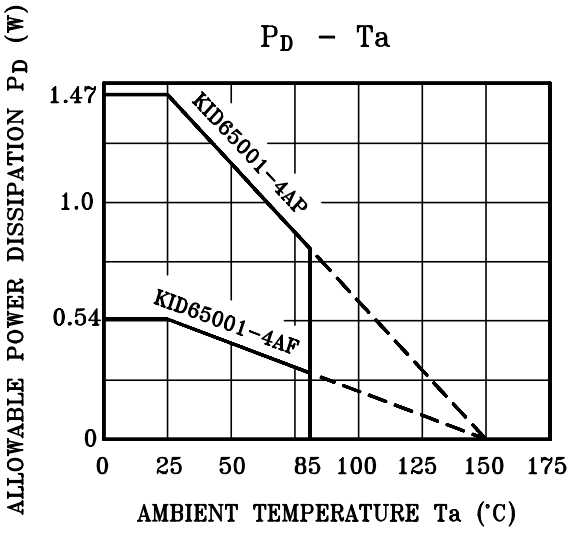
KID65004AP/AF