查询LT6550CMS供应商 捷多邦，专业PCB打样工厂，24小时加急出货

LT6550/LT6551

3.3V Triple and Quad Video Amplifiers

FEATURES

- **Single Supply Operation from 3V to 12.6V**
- **Small (3mm × 5mm) MSOP 10-Lead Package**
- **Internal Resistors for a Gain of Two**
- 340V/µs Slew Rate
- 110MHz –3dB Bandwidth
- 30MHz Flat to 0.25dB
- 3% Settling Time: 20ns
- Input Common Mode Range Includes Ground
- Rail-to-Rail Output
- High Output Drive: 60mA
- Operating Temperature Range: –40°C to 85°C
- 24-Bit RGB

APPLICATIONS

- Automotive Displays
- LCD and CRT Compatible
- RGB Amplifiers
- Coaxial Cable Drivers
- Low Voltage High Speed Signal Processing
- Set Top Boxes

, LTC and LT are registered trademarks of Linear Technology Corporation.

DESCRIPTION

The LT®6550/LT6551 are 3.3V triple and quad high speed video amplifiers. These voltage feedback amplifiers drive double terminated 50Ω or 75Ω cables and are configured for a fixed gain of 2, eliminating six or eight external gain setting resistors. The LT6550/LT6551 feature 110MHz –3dB bandwidth, high slew rates and fast settling, making them ideal for RGB video processing.

The LT6551 quad is designed for single supply operation and the LT6550 triple can be used on either single or split supplies. On a single 3.3V supply, the input voltage range extends from ground to 1.55V and the output swings to within 400mV of the supply voltage while driving a 150Ω load. These features, combined with the ability to accept RGB video signals without the need for AC coupling or level shifting of the incoming signals, make the LT6550/LT6551 an ideal choice for low voltage video applications.

Both the LT6550 and LT6551 are available in the small 10-Pin MSOP package and utilize a flow-thru pin out. The small footprint results in a compact high performance video amplifier solution.

TYPICAL APPLICATION

3.3V Single Supply LT6551 RGB Plus SYNC Cable Driver

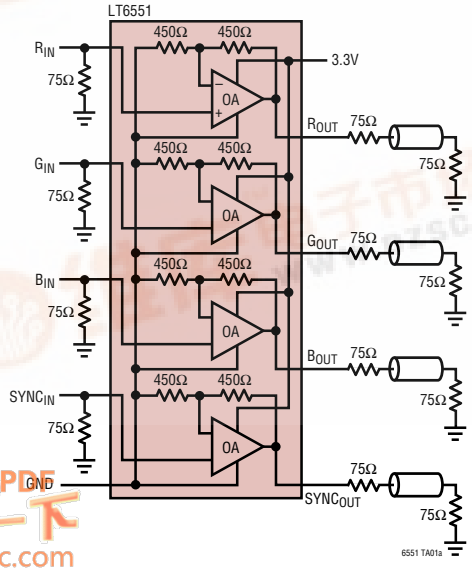

Output Step Response

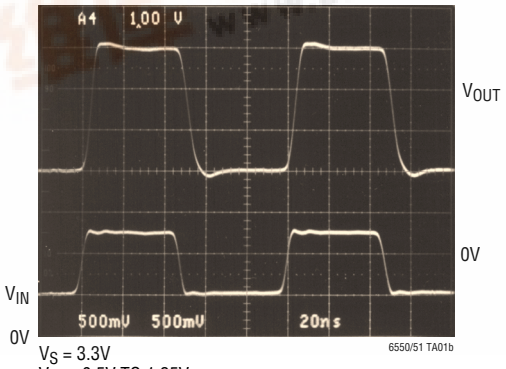

V_S = 3.3V
V_{IN} = 0.5V TO 1.25V
f = 10MHz

找PDF 维库一下 pdf.dzsc.com

ABSOLUTE MAXIMUM RATINGS

(Note 1)

Total Supply Voltage
- LT6550 (V_{CC} TO V_{EE}) 12.6V
- LT6551 (V_{CC} TO GND) 12.6V

Input Current (Note 9) ..... ±10mA
Output Short-Circuit Duration (Note 2) ..... Indefinite
Operating Temperature Range ..... –40°C to 85°C

Specified Temperature Range (Note 3)
- LT6550C/LT6551C .....–40°C to 85°C
- LT6550I/LT6551I ..... –40°C to 85°C

Maximum Junction Temperature ..... 150°C
Storage Temperature Range ..... –65°C to 150°C
Lead Temperature (Soldering, 10 sec) ..... 300°C

PACKAGE/ORDER INFORMATION

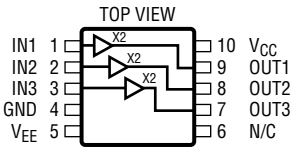

MS10 PACKAGE
10-LEAD PLASTIC MSOP

T_{JMAX} = 150°C, θ_{JA} = 110°C/W
(Note 4)

ORDER PART NUMBER	MS10 PART MARKING
LT6550CMS LT6550IMS	LTB9 LTC1

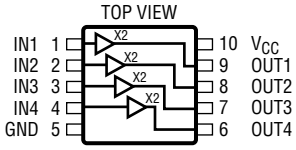

MS10 PACKAGE
10-LEAD PLASTIC MSOP

T_{JMAX} = 150°C, θ_{JA} = 110°C/W
(Note 4)

ORDER PART NUMBER	MS10 PART MARKING
LT6551CMS LT6551IMS	LTC2 LTC3

Consult LTC Marketing for parts specified with wider operating temperature ranges.

3.3V ELECTRICAL CHARACTERISTICS

The ● denotes the specifications which apply over the specified temperature range, otherwise specifications are at T_A = 25°C. V_{CC} = 3.3V, V_{GND} = 0V; V_{IN} = 0.75V LT6550 (Pins 1,2,3); LT6551 (Pins 1,2,3,4). V_{EE} = 0V LT6550 (Pin 5), unless otherwise noted.

PARAMETER	CONDITIONS		MIN	TYP	MAX	UNITS
DC Output Accuracy	No Load, V_{OUT} Ideal = 1.5V	●		30	70	mV
Output Voltage Matching	Between Any Two Outputs	●		25	75	mV
Input Current	Any Input	●		15	65	µA
Input Impedance, $\Delta V_{IN}/\Delta I_{IN}$	V_{IN} = 0V to 1V	●	100	300		kΩ
Input Noise Voltage Density	f = 100kHz (Note 10)			12		nV/√Hz
Input Noise Current Density	f = 100kHz (Note 10)			8		pA/√Hz
Voltage Gain (Note 5)	0.25V ≤ V_{IN} ≤ 1.25V					
	No Load	●	1.9		2.1	V/V
	R_L = 150Ω	●	1.9		2.1	V/V
	R_L = 75Ω, 0.25V ≤ V_{IN} ≤ 0.75V		1.85		2.15	V/V
Output Voltage Swing Low	V_{IN} = –0.1V					
	No Load	●		10	30	mV
	I_{SINK} = 5mA	●		60	150	mV
	I_{SINK} = 10mA	●		90	200	mV
Output Voltage Swing High	V_{IN} = 1.75V					
	No Load	●	3.0	3.2		V
	R_L = 150Ω	●	2.5	2.9		V
	R_L = 75Ω		2.0	2.5		V

3.3V ELECTRICAL CHARACTERISTICS

The ● denotes the specifications which apply over the specified temperature range, otherwise specifications are at T_A = 25°C. V_{CC} = 3.3V, V_{GND} = 0V; V_{IN} = 0.75V LT6550 (Pins 1,2,3); LT6551 (Pins 1,2,3,4). V_{EE} = 0V LT6550 (Pin 5), unless otherwise noted.

PARAMETER	CONDITIONS		MIN	TYP	MAX	UNITS
PSRR	V_{CC} = 3V to 10V, V_{IN} = 0.5V	●	40	48		dB
Minimum Supply Voltage (Note 6)		●	3			V
Output Short-Circuit Current	V_{IN} = 1V, V_{OUT} = 0V		35	50		mA
		●	25			mA
Supply Current per Amplifier (Note 7)				8.5	10	mA
		●			11	mA
Slew Rate (Note 8)	R_L = 150Ω, V_{OUT} = 0.5V to 2.5V		140	250		V/µs
	Measured from 1V to 2V	●	115			V/µs
Small Signal –3dB Bandwidth	R_L = 150Ω			90		MHz
Gain Flatness	Less than 0.25dB			30		MHz
Gain Matching	Any One Channel to Any Other Channel			0.15		dB
Settling Time to 3%	R_L = 150Ω, V_{OUT} = 1V to 2.5V			20		ns
Settling Time to 1%	R_L = 150Ω, V_{OUT} = 1V to 2.5V			30		ns
% Overshoot	V_{OUT} = 1V to 2.5V, R_L = 150Ω			5		%
Differential Gain	R_L = 150Ω, Black Level = 0.6V at Device Output			0.09		%
Differential Phase	R_L = 150Ω, Black Level = 0.6V at Device Output			0.09		Deg
Channel Separation	Measured at 10MHz			60		dB

5V ELECTRICAL CHARACTERISTICS

The ● denotes the specifications which apply over the specified temperature range, otherwise specifications are at T_A = 25°C. V_{CC} = 5V, V_{GND} = 0V; V_{IN} = 1.25V LT6550 (Pins 1,2,3); LT6551 (Pins 1,2,3,4). V_{EE} = 0V LT6550 (Pin 5), unless otherwise noted.

PARAMETER	CONDITIONS		MIN	TYP	MAX	UNITS
Output Accuracy	No Load, V_{OUT} Ideal = 2.5V	●		30	70	mV
Output Voltage Matching	Between Any Two Outputs	●		40	90	mV
Input Current		●		15	65	µA
Input Impedance, $\Delta V_{IN}/\Delta I_{IN}$	V_{IN} = 0V to 2V	●	100	300		kΩ
Input Noise Voltage Density	f = 100kHz (Note 10)			12		nV/√Hz
Input Noise Current Density	f = 100kHz (Note 10)			8		pA/√Hz
Voltage Gain (Note 5)	0.25V ≤ V_{IN} ≤ 1.75V					
	No Load	●	1.9		2.1	V/V
	R_L = 150Ω	●	1.9		2.1	V/V
	R_L = 75Ω, 0.25V ≤ V_{IN} ≤ 1.25V, 0°C ≤ T_A ≤ 70°C (Only)	●	1.85		2.15	V/V
Output Voltage Swing Low	V_{IN} = –0.1V					
	No Load	●		10	30	mV
	I_{SINK} = 5mA	●		60	150	mV
	I_{SINK} = 10mA	●		90	200	mV
Output Voltage Swing High	V_{IN} = 2.6V					
	No Load	●	4.6	4.8		V
	R_L = 150Ω	●	3.5	4.1		V
	R_L = 75Ω, 0°C ≤ T_A ≤ 70°C (Only)	●	2.5	3.2		V
PSRR	V_{CC} = 3V to 10V, V_{IN} = 0.5V	●	40	48		dB
Minimum Supply Voltage (Note 6)		●	3			V

5V ELECTRICAL CHARACTERISTICS

The ● denotes the specifications which apply over the specified temperature range, otherwise specifications are at T_A = 25°C. V_{CC} = 5V, V_{GND} = 0V; V_{IN} = 1.25V LT6550 (Pins 1,2,3); LT6551 (Pins 1,2,3,4). V_{EE} = 0V LT6550 (Pin 5), unless otherwise noted.

PARAMETER	CONDITIONS		MIN	TYP	MAX	UNITS
Output Short-Circuit Current	V_{IN} = 1V, V_{OUT} = 0V 0°C ≤ T_A ≤ 70°C –40°C ≤ T_A ≤ 85°C	 ● ●	45 40 30	60		mA mA mA
Supply Current per Amplifier (Note 7)		 ●		9.5	11.5 12.5	mA mA
Slew Rate	R_L = 150Ω, V_{OUT} = 0.5V to 3.5V, Measured from 1V to 3V	 ●	220 180	340		V/µs V/µs
Small Signal –3dB Bandwidth	R_L = 150Ω			110		MHz
Gain Flatness	Less than 0.25dB			30		MHz
Gain Matching	Any One Channel to Any Other Channel			0.15		dB
Settling Time to 3%	R_L = 150Ω, V_{OUT} = 1V to 2.5V			20		ns
Settling Time to 1%	R_L = 150Ω, V_{OUT} = 1V to 2.5V			35		ns
% Overshoot	V_{OUT} = 1V to 2.5V, R_L = 150Ω			5		%
Differential Gain	R_L = 150Ω, Black Level = 1V at Device Output			0.05		%
Differential Phase	R_L = 150Ω, Black Level = 1V at Device Output			0.05		Deg
Channel Separation	Measured at 10MHz			60		dB

±5V ELECTRICAL CHARACTERISTICS

(LT6550 Only) The ● denotes the specifications which apply over the specified temperature range, otherwise specifications are at T_A = 25°C. V_S = ±5V, V_{IN} = 0V (Pins 1,2,3) V_{GND} = 0V (Pin 4) unless otherwise noted.

PARAMETER	CONDITIONS		MIN	TYP	MAX	UNITS
Output Offset		●		30	70	mV
Output Voltage Matching	Between Any Two Outputs	●		20	60	mV
Input Current		●		20	70	µA
Input Impedance, $\Delta V_{IN}/\Delta I_{IN}$	V_{IN} = –1V to 1V	●	200	500		kΩ
Input Noise Voltage Density	f = 100kHz (Note 10)			12		nV/√Hz
Input Noise Current Density	f = 100kHz (Note 10)			8		pA/√Hz
Voltage Gain	–1.75V ≤ V_{IN} ≤ 1.75V No Load R_L = 150Ω R_L = 75Ω, –1V ≤ V_{IN} ≤ 1V	 ● ● ●	 1.9 1.9 1.9		 2.1 2.1 2.1	 V/V V/V V/V
Output Voltage Swing	V_{IN} = ±2.6V No Load R_L = 150Ω R_L = 75Ω, 0°C ≤ T_A ≤ 70°C (Only)	 ● ● ●	 ±4.6 ±3.5 ±2.6	 ±4.8 ±4.2 ±3.2		 V V V
PSRR	V_S = ±2.5V to ±5V,	●	38	48		dB
Output Short-Circuit Current	V_O = 0V 0°C ≤ T_A ≤ 70°C –40°C ≤ T_A ≤ 85°C	 ● ●	45 40 30	60		mA mA mA
Supply Current per Amplifier		 ●		8.5	10.5 12	mA mA
Slew Rate	R_L = 150Ω, V_{OUT} = –3V to 3V, Measured from –2V to 2V	 ●	400 300	600		V/µs V/µs
Small Signal –3dB Bandwidth	R_L = 150Ω			90		MHz

±5V ELECTRICAL CHARACTERISTICS

(LT6550 Only) The ● denotes the specifications which apply over the specified temperature range, otherwise specifications are at T_A = 25°C. V_S = ±5V, V_{IN} = 0V (Pins 1,2,3) V_{GND} = 0V (Pin 4) unless otherwise noted.

PARAMETER	CONDITIONS		MIN	TYP	MAX	UNITS
Gain Flatness	Less than 0.25dB			30		MHz
Gain Matching	Any One Channel to Any Other Channel			0.15		dB
Settling Time to 3%	R_L = 150Ω, V_{OUT} = 1V to 2.5V			20		ns
Settling Time to 1%	R_L = 150Ω, V_{OUT} = 1V to 2.5V			30		ns
% Overshoot	V_{OUT} = 1V to 2.5V, R_L = 150Ω			5		%
Differential Gain	R_L = 150Ω, Black Level = 0V at Device Output			0.15		%
Differential Phase	R_L = 150Ω, Black Level = 0V at Device Output			0.09		Deg
Channel Separation	Measured at 10MHz			60		dB

Note 1: Absolute Maximum Ratings are those values beyond which the life of a device may be impaired.

Note 2: A heat sink may be required to keep the junction temperature below absolute maximum. This depends on the power supply voltage and how many amplifiers are shorted.

Note 3: The LT6550C/LT6551C are guaranteed to meet specified performance from 0°C to 70°C and are designed, characterized and expected to meet specified performance from –40°C to 85°C but are not tested or QA sampled at these temperatures. The LT6550I/LT6551I are guaranteed to meet specified performance from –40°C to 85°C.

Note 4: Thermal resistance varies depending upon the amount of PC board metal attached to Pin 5 of the device. θ_{JA} is specified for a 2500mm^2 test board covered with 2oz copper on both sides.

Note 5: Gain is measured by changing the input voltage, and dividing the change in output voltage by the change in input voltage.

Note 6: Minimum supply voltage is guaranteed by the PSRR test.

Note 7: The supply current specification includes additional output current through the internal feedback and gain resistor.

Note 8: Guaranteed by correlation to slew rate at 5V and ±5V.

Note 9: The inputs are protected from ESD with diodes to the supplies.

Note 10: Noise is input referred, including internal gain resistors.

5V/3.3V TYPICAL PERFORMANCE CHARACTERISTICS

V_{EE} (Pin 5) = 0V (LT6550), GND (Pin 5) = 0V (LT6551)

Supply Current Per Amplifier vs Supply Voltage

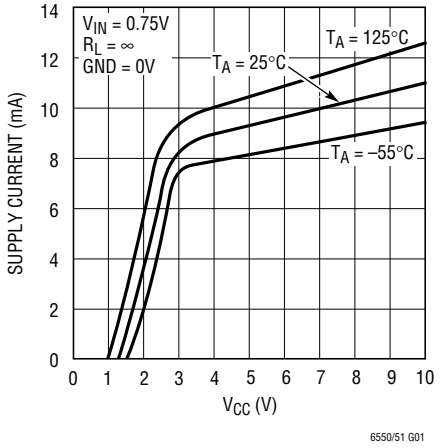

Output Voltage vs Input Voltage

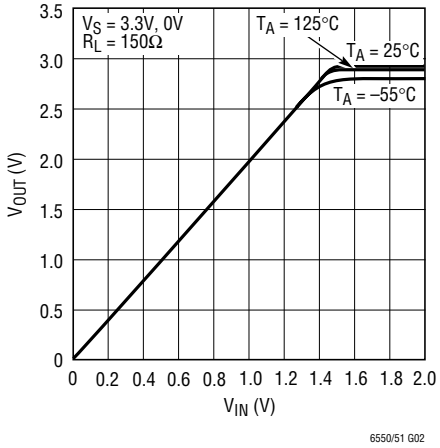

Input Bias Current vs Temperature

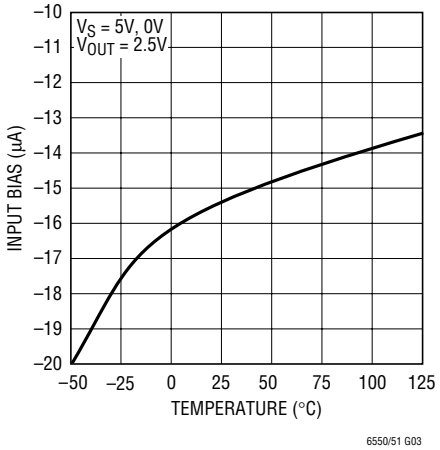

5V/3.3V TYPICAL PERFORMANCE CHARACTERISTICS

V_{EE} (Pin 5) = 0V (LT6550), GND (Pin 5) = 0V (LT6551)

Input Bias Current vs Input Voltage

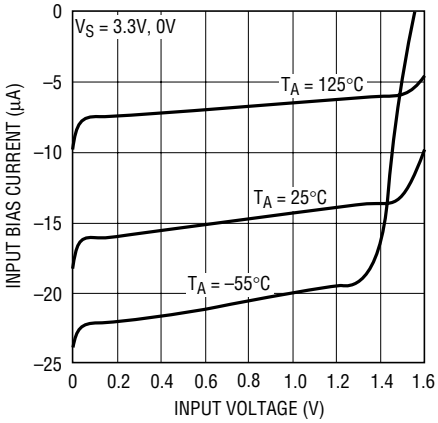

Input Bias Current vs Input Voltage

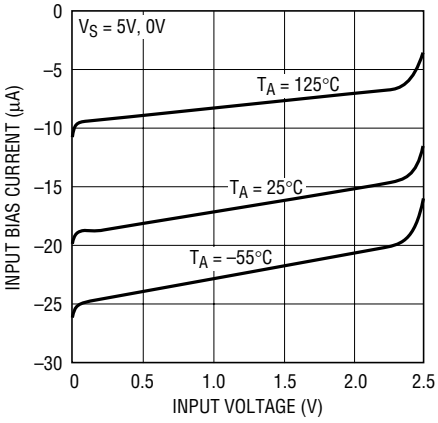

Output Saturation Voltage vs Load Current (Output High)

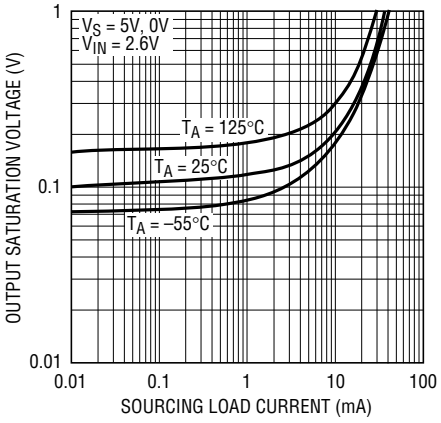

Output Saturation Voltage vs Load Current (Output Low)

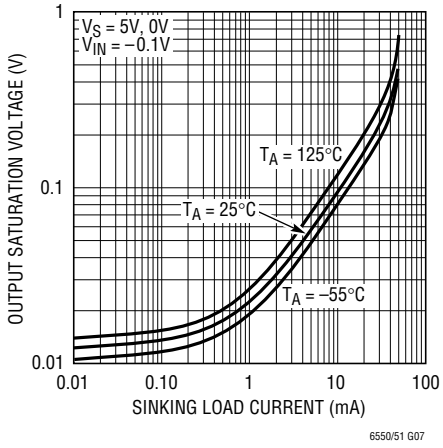

Output Short-Circuit Current vs Temperature

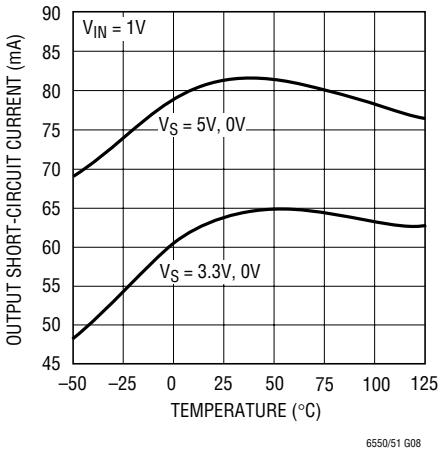

Gain and Phase vs Frequency

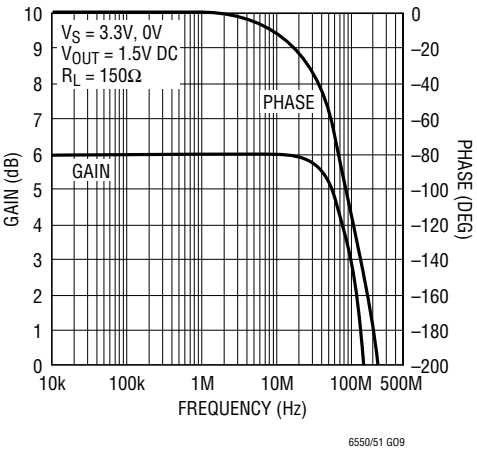

Gain Flatness vs Frequency

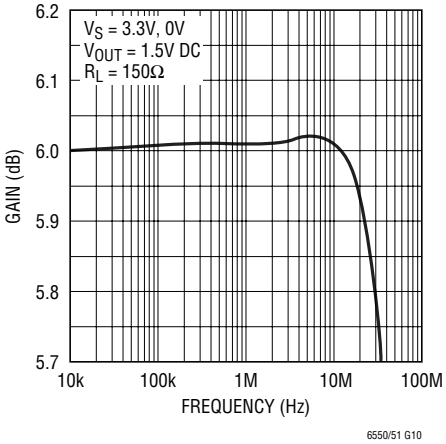

–3dB, –0.25dB Bandwidth vs Temperature

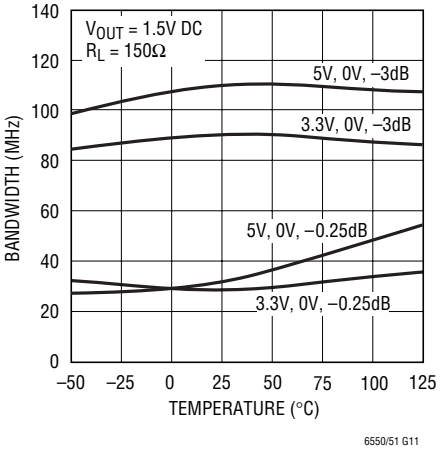

–3dB Bandwidth vs V_{CC}

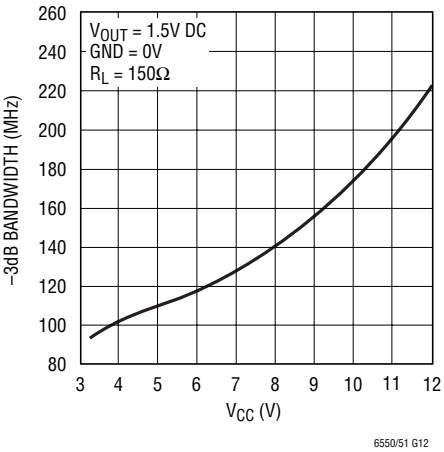

5V/3.3V TYPICAL PERFORMANCE CHARACTERISTICS

V_{EE} (Pin 5) = 0V (LT6550), GND (Pin 5) = 0V (LT6551)

Frequency Response with Capacitive Loads

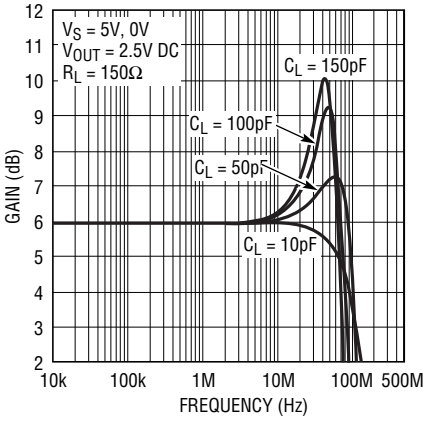

Capacitive Load Handling, Overshoot vs Capacitive Load

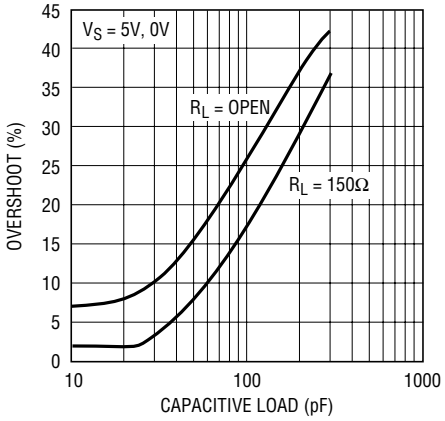

Slew Rate vs Temperature

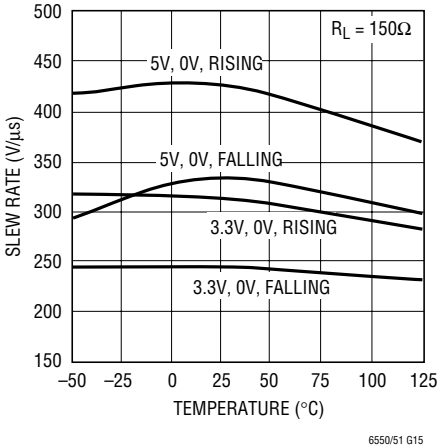

Power Supply Rejection Ratio vs Frequency

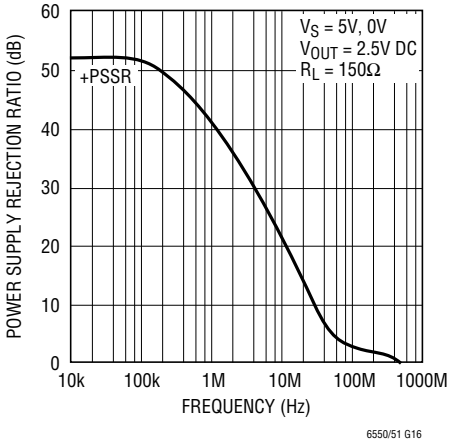

Output Impedance vs Frequency

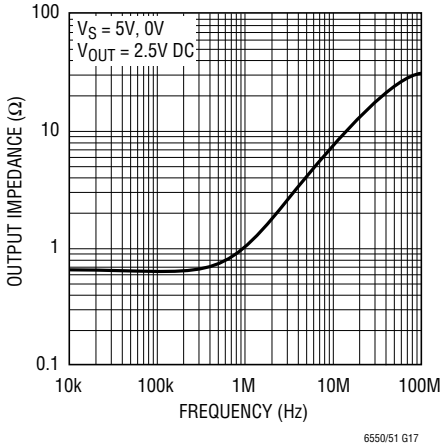

Channel Separation vs Frequency

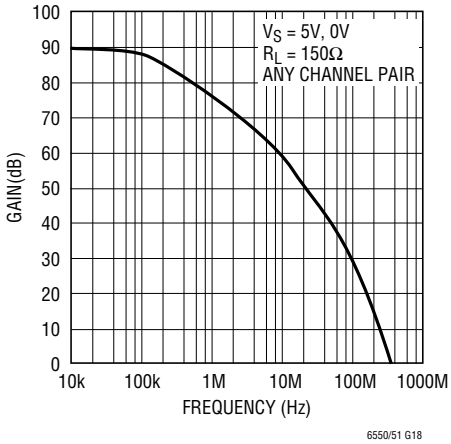

Gain Matching vs Frequency

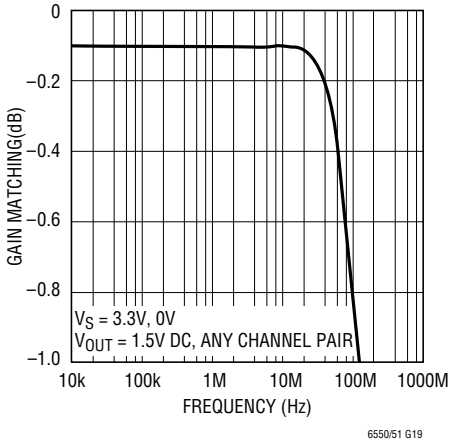

2nd and 3rd Harmonic Distortion vs Frequency

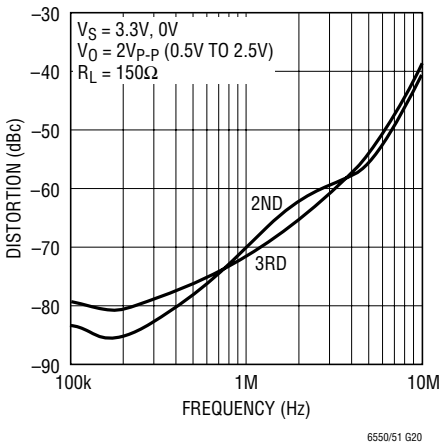

Small Signal Response

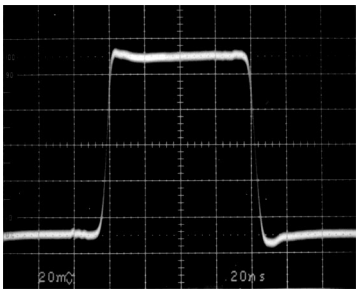

C_L = 20pF
V_S = 5V, 0V
V_{OUT} = 2.5V DC
R_L = 150Ω

5V/3.3V TYPICAL PERFORMANCE CHARACTERISTICS

V_{EE} (Pin 5) = 0V (LT6550), GND (Pin 5) = 0V (LT6551)

Large Signal Response

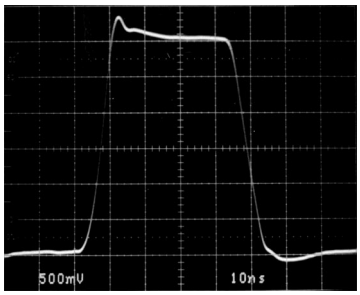

6550/51 G22

C_L = 20pF
V_S = 5V, 0V
V_{OUT} = 0.5V TO 3.5V
R_L = 150Ω

±5V TYPICAL PERFORMANCE CHARACTERISTICS (LT6550 Only)

V_{GND} (Pin 4) = 0V

Supply Current vs Total Supply Voltage

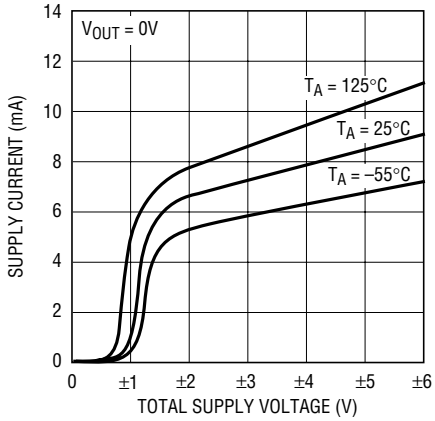

6550/51 G23

Input Bias Current vs Input Voltage

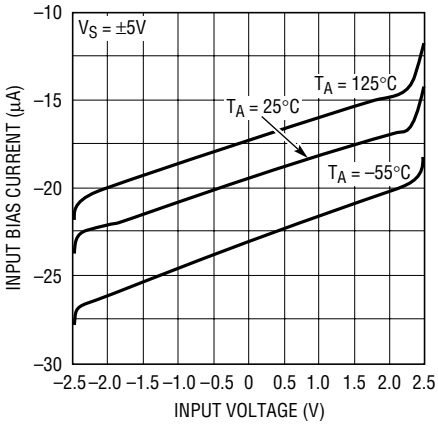

6550/51 G24

Output Offset Voltage vs Temperature of Three Typical Units

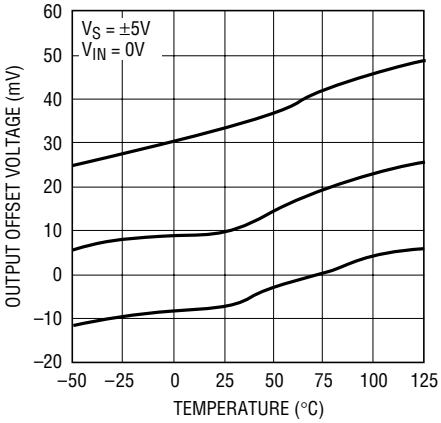

6550/51 G25

Output Voltage Matching vs Temperature of Three Typical Parts

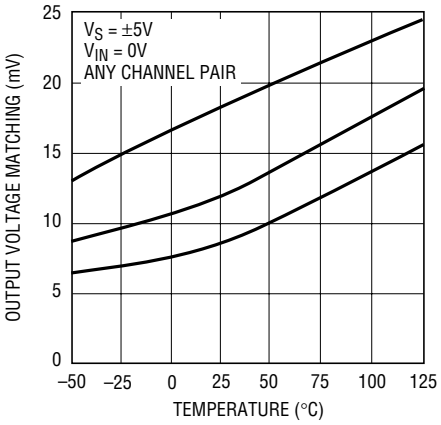

6550/51 G26

Output Short-Circuit Current vs Temperature

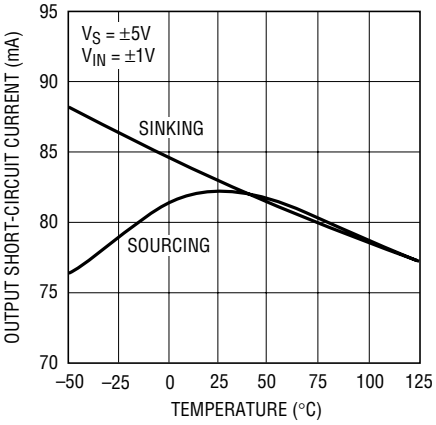

6550/51 G27

Gain and Phase vs Frequency

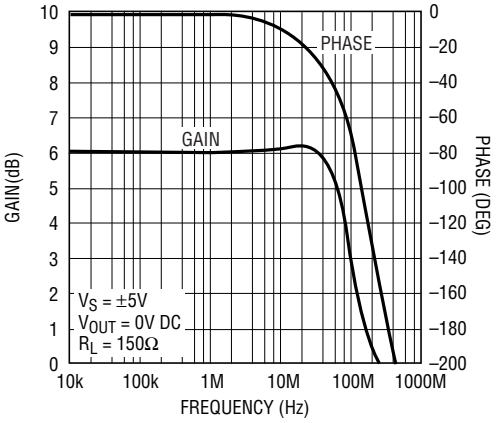

6550/51 G28

±5V TYPICAL PERFORMANCE CHARACTERISTICS (LT6550 Only)

V_{GND} (Pin 4) = 0V

Gain Flatness vs Frequency

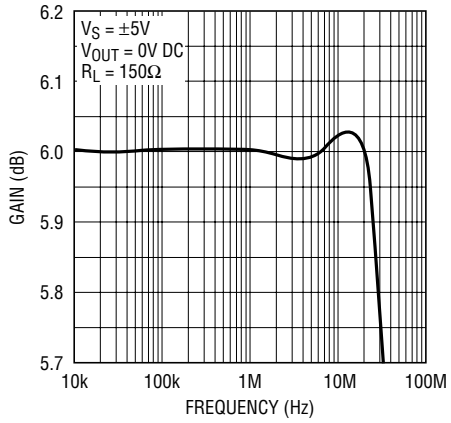

Gain Matching vs Frequency

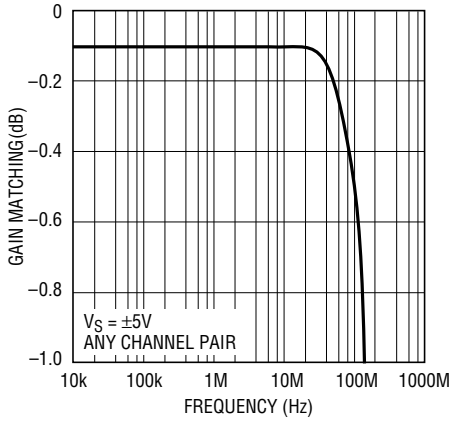

Frequency Response with Capacitive Loads

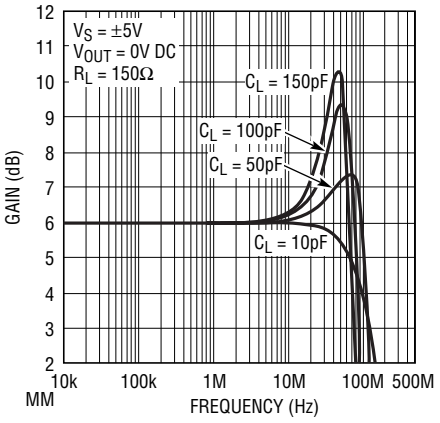

Slew Rate

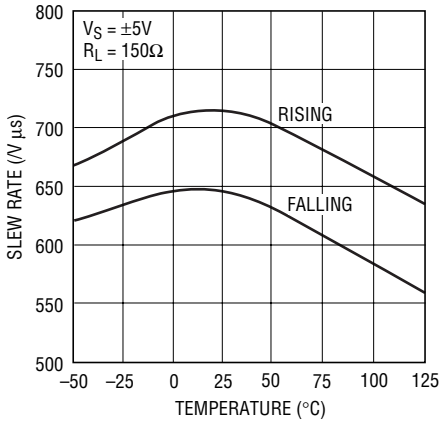

Power Supply Rejection Ratio vs Frequency

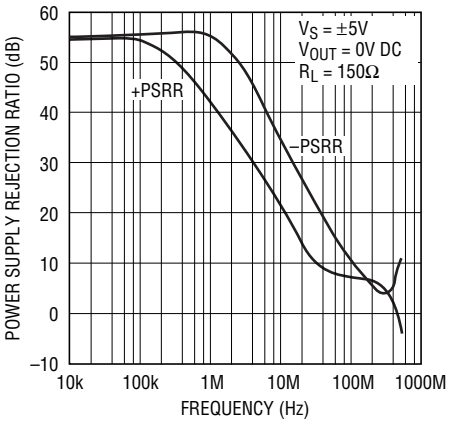

Output Impedance vs Frequency

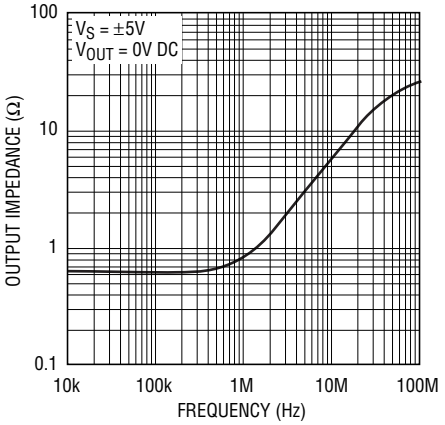

Channel Separation vs Frequency

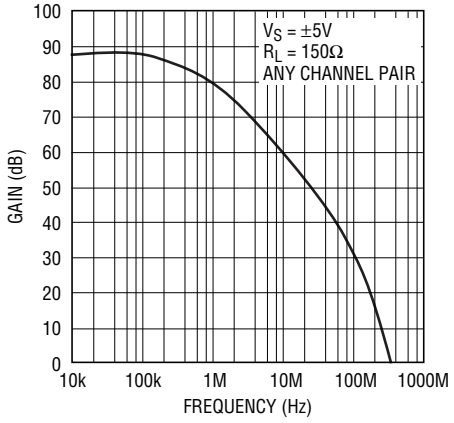

2nd and 3rd Harmonic Distortion vs Frequency

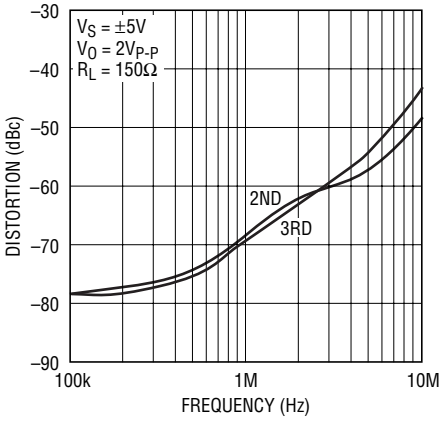

Large Signal Response

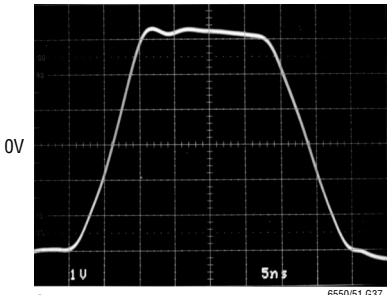

6550/51 G37

C_L = 20pF
V_S = ±5V
R_L = 150Ω

BLOCK DIAGRAMS

LT6550 Block Diagram

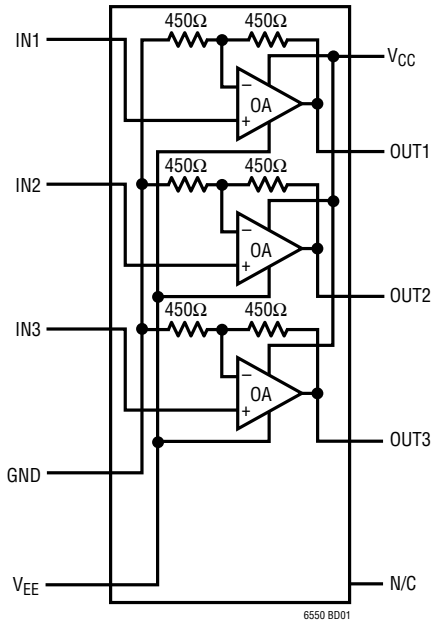

LT6551 Block Diagram

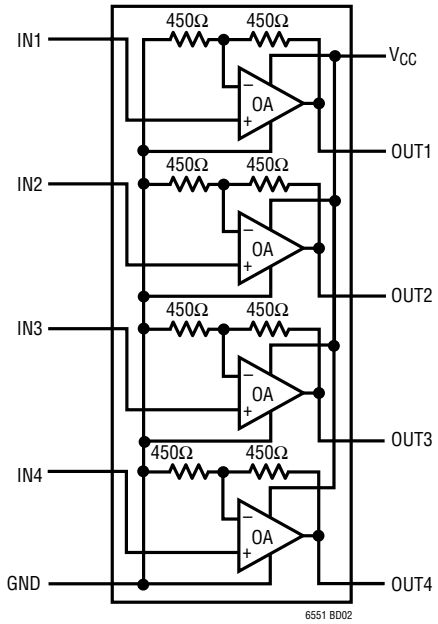

APPLICATIONS INFORMATION

Amplifier Characteristics

Figure 1 shows a simplified schematic of one channel of the LT6551 quad. Resistors RF and RG provide an internal gain of 2. (The LT6550 triple is a slight variation with the gain setting resistor, RG, connected to a separate ground pin). The input stage consists of transistors Q1 to Q8 and resistor R1. This topology allows for high slew rates at low supply voltages. There are back-to-back series diodes, D1 to D4, across the + and – inputs of each amplifier to limit the differential input voltage to ±1.4V. R_{IN} limits the current through these diodes if the input differential voltage exceeds ±1.4V. The input stage drives the degeneration resistors of PNP and NPN current mirrors, Q9 to Q12, that convert the differential signals into a single-ended output. The complementary drive generator supplies current to the output transistors that swing from rail-to-rail.

Input Voltage Range

The input voltage range is V_{EE} to (V_{CC} – 1.75V) over temperature. If the device is operated on a single 3V supply the maximum input is (3V – 1.75V) or 1.25V, and the internal gain of two will set the output voltage to 2.5V. Increasing the input beyond 1.25V will force the device out of its linear range, no longer a gain of 2, and the output will not increase beyond 2.5V. At a higher supply voltage, i.e. 5V, the maximum input voltage is 5V – 1.75V or 3.25V. However, due to the internal gain of 2, the output will clip with a lower input voltage. For linear unclipped operation the minimum input voltage is (V_{OUT} Min)/2 and the maximum input voltage is (V_{OUT} Max)/2 or (V_{CC} – 1.75V), whichever is less.

ESD

The LT6550/LT6551 have reverse-biased ESD protection diodes on all inputs and outputs as shown in Figure 1. If these pins are forced beyond either supply, unlimited current will flow through these diodes. If the current is limited to 10mA or less, no damage to the device will occur.

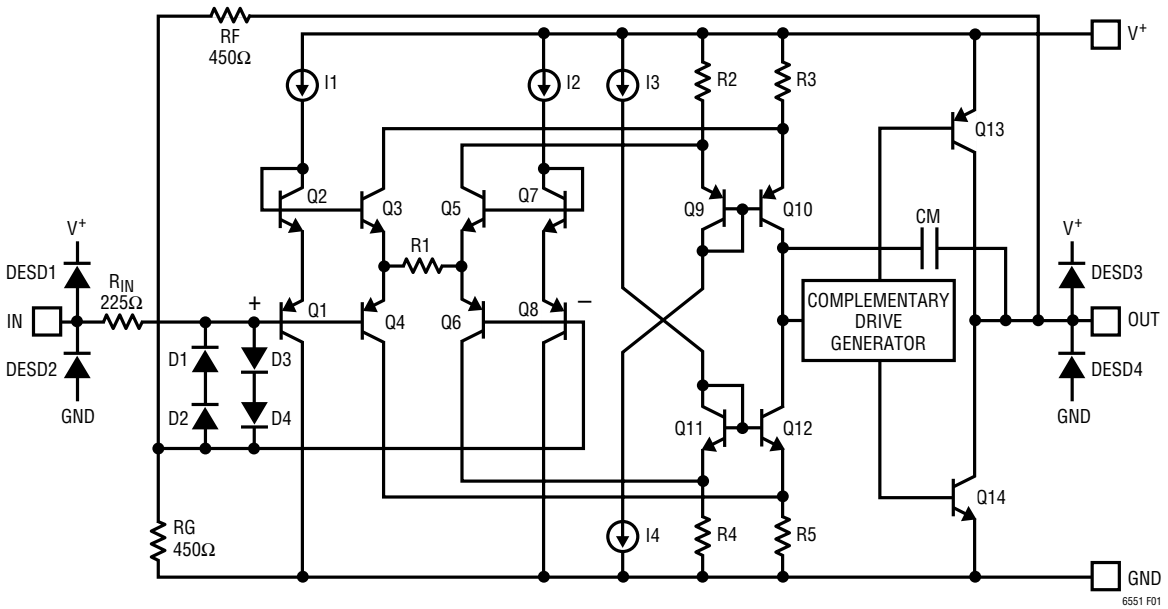

Figure 1. LT6551 Simplified Schematic

APPLICATIONS INFORMATION

Power Dissipation

The LT6550/LT6551, enhanced θ_{JA} MS package, has Pin 5 (V_{EE} for the LT6550 and GND for the LT6551) fused to the lead frame. This thermal connection increases the efficiency of the PC board as a heat sink. The PCB material can be very effective at transmitting heat between the pad area attached to Pin 5 and a ground or power plane layer. Copper board stiffeners and plated through holes can also be used to spread the heat generated by the device. Table 1 lists the thermal resistance for several different board sizes and copper areas. All measurements were taken on 3/32" FR-4 board with 2oz copper. This data can be used as a rough guideline in estimating thermal resistance. The thermal resistance for each application will be affected by thermal interactions with other components as well as board size and shape.

Table 1. Fused 10-Lead MSOP Package

COPPER AREA		BOARD AREA (mm2)	THERMAL RESISTANCE (JUNTION-TO-AMBIENT)
TOPSIDE* (mm2)	BACKSIDE (mm2)		
540	540	2500	110°C/W
100	100	2500	120°C/W
100	0	2500	130°C/W
30	0	2500	135°C/W
0	0	2500	140°C/W

*Device is mounted on topside.

As an example, calculate the junction temperature for the circuit in Figure 2 assuming an 85°C ambient temperature.

The device dissipation can be found by measuring the supply current, calculating the total dissipation and then subtracting the dissipation in the load.

The dissipation for the amplifiers is:

$$P_D = (106mA)(5V) - 4 \bullet (2.5V)^2/150 = 363mW$$

The total package power dissipation is 363mW. When a 2500 sq mm PC board with 540 sq mm of 2oz copper on top and bottom is used, the thermal resistance is 110°C/W. The junction temperature (T_J) is:

$$T_J = (363mW)(110°C/W) + 85°C = 125°C$$

The maximum junction temperature for the LT6551 is 150°C so the heat sinking capability of the board is adequate for the application.

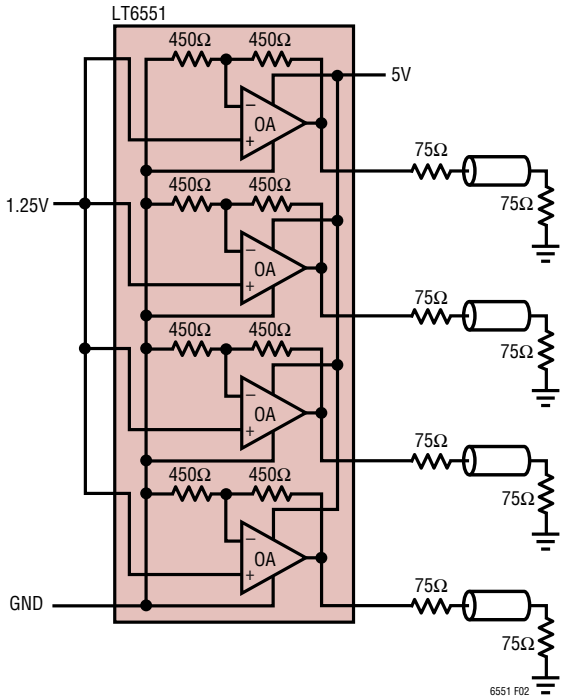

Figure 2. Calculating Junction Temperature

TYPICAL APPLICATION

S Video Splitter

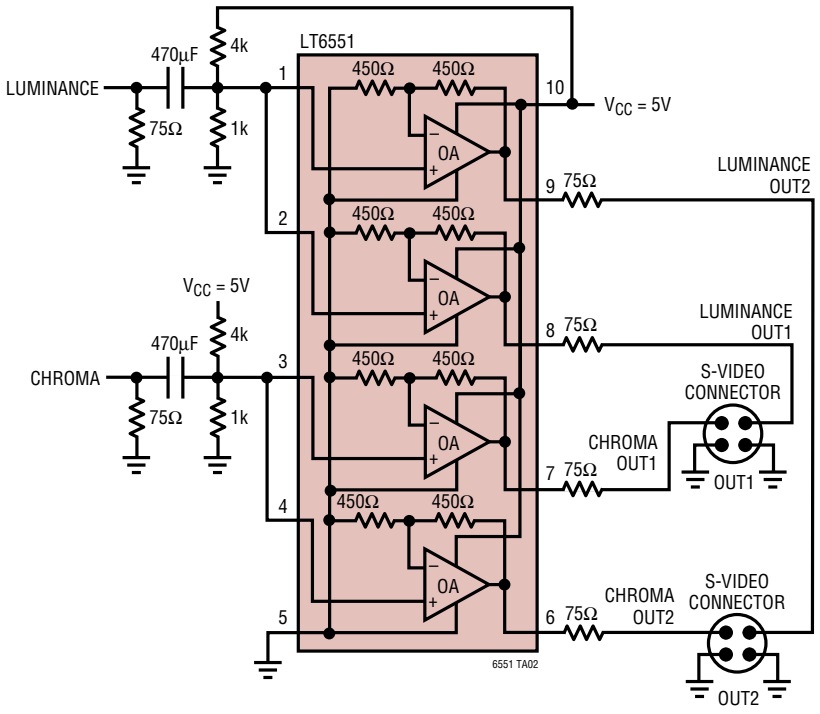

TYPICAL APPLICATION

Consumer products require generation of YP_BP_R luminance/chrominance component signals, often from RGB source content. The YP_BP_R format has a luminance signal and two weighted color difference signals at baseband. Even with their fixed internal gain resistors, two LT6550s connected as shown easily implement the required conversion matrix equations. The Y channel is a weighted average of the 2X amplified RGB signals and with the feedback connection of the Y channel output in the second LT6550 back to the gain-resistor common pin, an implicit Y subtraction is performed for the chroma channels and the desired unity gain is produced for the Y-channel. The necessary scaling of the color-difference signals is performed passively by their respective output termination resistor networks. Since this circuit naturally produces bipolar chroma signals (±0.35V at the cable load) regardless of RGB offset, the simplest implementation is to power the circuit with ±3.3V split supplies. With an available output swing of about 5.6V for this supply configuration, the circuit handles video with composite syncs and/or various offsets without difficulty.

RGB to YP_BP_R Component-Video Conversion

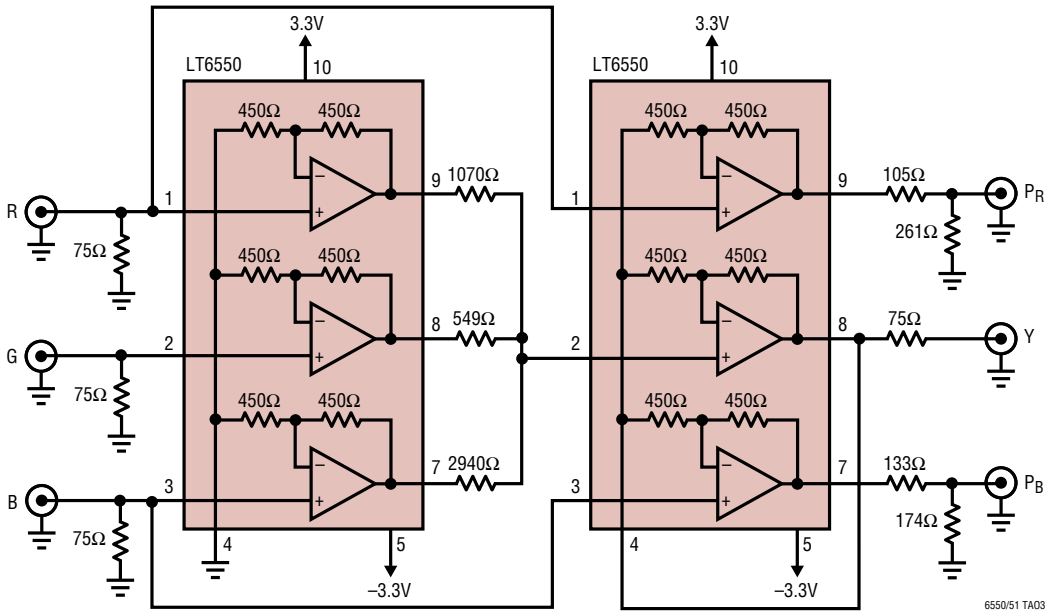

PACKAGE DESCRIPTION

MS Package
10-Lead Plastic MSOP
(Reference LTC DWG # 05-08-1661)

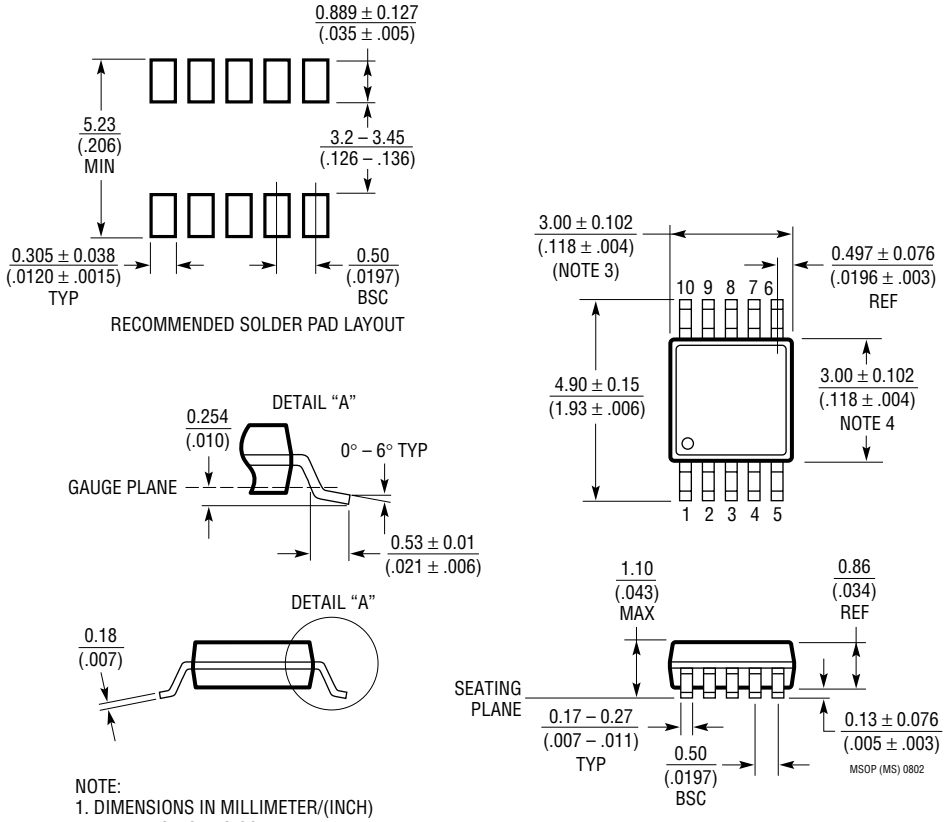

NOTE:
1. DIMENSIONS IN MILLIMETER/(INCH)
2. DRAWING NOT TO SCALE
3. DIMENSION DOES NOT INCLUDE MOLD FLASH, PROTRUSIONS OR GATE BURRS.
   MOLD FLASH, PROTRUSIONS OR GATE BURRS SHALL NOT EXCEED 0.152mm (.006") PER SIDE
4. DIMENSION DOES NOT INCLUDE INTERLEAD FLASH OR PROTRUSIONS.
   INTERLEAD FLASH OR PROTRUSIONS SHALL NOT EXCEED 0.152mm (.006") PER SIDE
5. LEAD COPLANARITY (BOTTOM OF LEADS AFTER FORMING) SHALL BE 0.102mm (.004") MAX

TYPICAL APPLICATION

10MHz Reference Distribution Amplifier

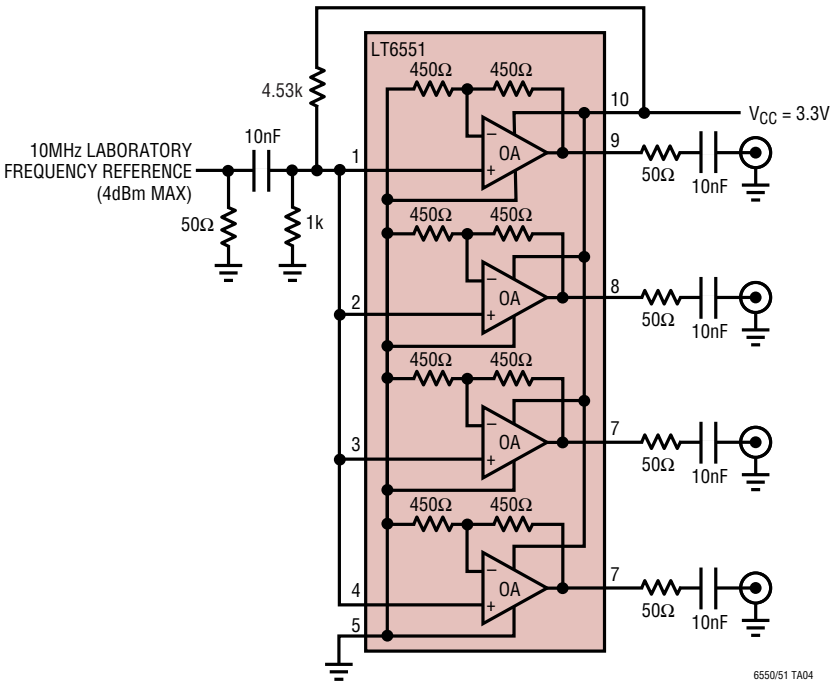

RELATED PARTS

PART NUMBER	DESCRIPTION	COMMENTS
LT1259/LT1260	Dual/Triple 130MHz Current Feedback Amplifiers	Shutdown, Operates to ±15V
LT1395/LT1396/LT1397	Single, Dual, Quad 400MHz Current Feedback Amplifier	800V/µs Slew Rate
LT1398/LT1399	Dual/Triple 300MHz Current Feedback Amplifier	0.1dB Gain Flatness to 150MHz, Shutdown
LT1675/LT1675-1	250MHz, Triple and Single RGB Multiplexer with Current Feedback Amplifiers	100MHz Pixel Switching, –3dB Bandwidth: 250MHz, 1100V/µs Slew Rate
LT1809/LT1810	Single/Dual, 180MHz, Rail-to-Rail Input and Output Amplifiers	350V/µs Slew Rate, Shutdown, Low Distortion –90dBc at 5MHz

LT/TP 0303 2K • PRINTED IN USA