Order this document by LM339/D

MOTOROLA

LM339, LM339A, LM239, LM239A, LM2901, M2901V, MC3302

Quad Single Supply Comparators

These comparators are designed for use in level detection, low–level sensing and memory applications in consumer automotive and industrial electronic applications.

- Single or Split Supply Operation
- Low Input Bias Current: 25 nA (Typ)
- Low Input Offset Current: ±5.0 nA (Typ)
- Low Input Offset Voltage: ±1.0 mV (Typ) LM139A Series
- Input Common Mode Voltage Range to Gnd
- Low Output Saturation Voltage: 130 mV (Typ) @ 4.0 mA
- TTL and CMOS Compatible
- ESD Clamps on the Inputs Increase Reliability without Affecting Device Operation

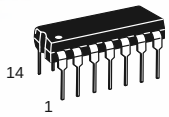

N, P SUFFIX
PLASTIC PACKAGE
CASE 646

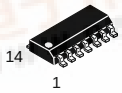

D SUFFIX
PLASTIC PACKAGE
CASE 751A
(SO–14)

MAXIMUM RATINGS

Rating	Symbol	Value	Unit
Power Supply Voltage LM239, A/LM339A/LM2901, V MC3302	V_{CC}	 +36 or ±18 +30 or ±15	Vdc
Input Differential Voltage Range LM239, A/LM339A/LM2901, V MC3302	V_{IDR}	 36 30	Vdc
Input Common Mode Voltage Range	V_{ICMR}	–0.3 to V_{CC}	Vdc
Output Short Circuit to Ground (Note 1)	I_{SC}	Continuous	
Power Dissipation @ T_A = 25°C Plastic Package Derate above 25°C	P_D	 1.0 8.0	 W mW/°C
Junction Temperature	T_J	150	°C
Operating Ambient Temperature Range LM239, A MC3302 LM2901 LM2901V LM339, A	T_A	 –25 to +85 –40 to +85 –40 to +105 –40 to +125 0 to +70	°C
Storage Temperature Range	T_{stg}	–65 to +150	°C

NOTE: 1. The maximum output current may be as high as 20 mA, independent of the magnitude of V_{CC}. Output short circuits to V_{CC} can cause excessive heating and eventual destruction.

PIN CONNECTIONS

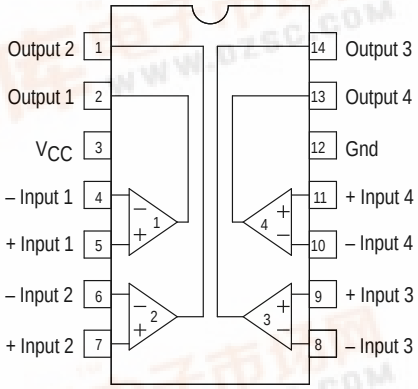

(Top View)

Figure 1. Circuit Schematic

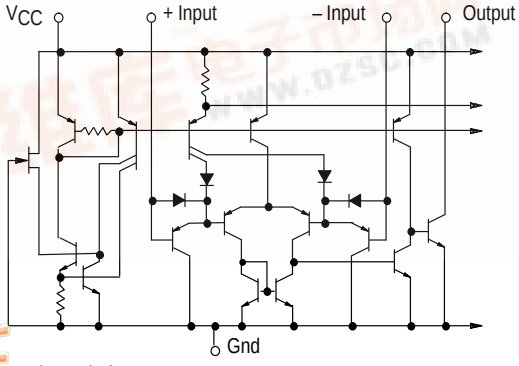

NOTE: Diagram shown is for 1 comparator.

ORDERING INFORMATION

Device	Operating Temperature Range	Package
LM239D,AD LM239N,AN	T_A = 25° to +85°C	SO–14 Plastic DIP
LM339D, AD LM339N, AN	T_A = 0° to +70°C	SO–14 Plastic DIP
LM2901D LM2901N	T_A = –40° to +105°C	SO–14 Plastic DIP
LM2901VD LM2901VN	T_A = –40° to +125°C	SO–14 Plastic DIP
MC3302P	T_A = –40° to +85°C	Plastic DIP

ELECTRICAL CHARACTERISTICS (V_{CC} = +5.0 Vdc, T_A = +25°C, unless otherwise noted)

Characteristic	Symbol	LM239A/339A			LM239/339			LM2901/2901V			MC3302			Unit
		Min	Typ	Max	Min	Typ	Max	Min	Typ	Max	Min	Typ	Max	
Input Offset Voltage (Note 4)	V_{IO}	–	±1.0	±2.0	–	±2.0	±5.0	–	±2.0	±7.0	–	±3.0	±20	mVdc
Input Bias Current (Notes 4, 5) (Output in Analog Range)	I_{IB}	–	25	250	–	25	250	–	25	250	–	25	500	nA
Input Offset Current (Note 4)	I_{IO}	–	±5.0	±50	–	±5.0	±50	–	±5.0	±50	–	±3.0	±100	nA
Input Common Mode Voltage Range	V_{ICMR}	0	–	V_{CC} –1.5	0	–	V_{CC} –1.5	0	–	V_{CC} –1.5	0	–	V_{CC} –1.5	V
Supply Current $R_L = \infty$ (For All Comparators) $R_L = \infty$, V_{CC} = 30 Vdc	I_{CC}	 – –	 0.8 1.0	 2.0 2.5	 – –	 0.8 1.0	 2.0 2.5	 – –	 0.8 1.0	 2.0 2.5	 – –	 0.8 1.0	 2.0 2.5	mA
Voltage Gain $R_L \geq 15$ kΩ, V_{CC} = 15 Vdc	A_{VOL}	50	200	–	50	200	–	25	100	–	25	100	–	V/mV
Large Signal Response Time V_I = TTL Logic Swing, V_{ref} = 1.4 Vdc, V_{RL} = 5.0 Vdc, R_L = 5.1 kΩ	–	–	300	–	–	300	–	–	300	–	–	300	–	ns
Response Time (Note 6) V_{RL} = 5.0 Vdc, R_L = 5.1 kΩ	–	–	1.3	–	–	1.3	–	–	1.3	–	–	1.3	–	µs
Output Sink Current V_I (–) ≥ +1.0 Vdc, V_I(+) = 0, $V_O \leq$ 1.5 Vdc	I_{Sink}	6.0	16	–	6.0	16	–	6.0	16	–	6.0	16	–	mA
Saturation Voltage V_I(–) ≥ +1.0 Vdc, V_I(+) = 0, $I_{sink} \leq$ 4.0 mA	V_{sat}	–	130	400	–	130	400	–	130	400	–	130	500	mV
Output Leakage Current V_I(+) ≥ +1.0 Vdc, V_I(–) = 0, V_O = +5.0 Vdc	I_{OL}	–	0.1	–	–	0.1	–	–	0.1	–	–	0.1	–	nA

PERFORMANCE CHARACTERISTICS (V_{CC} = +5.0 Vdc, $T_A = T_{low}$ to T_{high} [Note 3])

Characteristic	Symbol	LM239A/339A			LM239/339			LM2901/2901V			MC3302			Unit
		Min	Typ	Max	Min	Typ	Max	Min	Typ	Max	Min	Typ	Max	
Input Offset Voltage (Note 4)	V_{IO}	–	–	±4.0	–	–	±9.0	–	–	±15	–	–	±40	mVdc
Input Bias Current (Notes 4, 5) (Output in Analog Range)	I_{IB}	–	–	400	–	–	400	–	–	500	–	–	1000	nA
Input Offset Current (Note 4)	I_{IO}	–	–	±150	–	–	±150	–	–	±200	–	–	±300	nA
Input Common Mode Voltage Range	V_{ICMR}	0	–	V_{CC} –2.0	0	–	V_{CC} –2.0	0	–	V_{CC} –2.0	0	–	V_{CC} –2.0	V
Saturation Voltage V_I(–) ≥ +1.0 Vdc, V_I(+) = 0, $I_{sink} \leq$ 4.0 mA	V_{sat}	–	–	700	–	–	700	–	–	700	–	–	700	mV
Output Leakage Current V_I(+) ≥ +1.0 Vdc, V_I(–) = 0, V_O = 30 Vdc	I_{OL}	–	–	1.0	–	–	1.0	–	–	1.0	–	–	1.0	µA
Differential Input Voltage All $V_I \geq$ 0 Vdc	V_{ID}	–	–	V_{CC}	–	–	V_{CC}	–	–	V_{CC}	–	–	V_{CC}	Vdc

NOTES: 3. (LM239/239A) T_{low} = –25°C, T_{high} = +85°
(LM339/339A) T_{low} = 0°C, T_{high} = +70°C
(MC3302) T_{low} = –40°C, T_{high} = +85°C
(LM2901) T_{low} = –40°C, T_{high} = +105°
(LM2901V) T_{low} = –40°C, T_{high} = +125°C
4. At the output switch point, $V_O \simeq$ 1.4 Vdc, $R_S \leq$ 100 Ω 5.0 Vdc ≤ V_{CC} ≤ 30 Vdc, with the inputs over the full common mode range (0 Vdc to V_{CC} –1.5 Vdc).
5. The bias current flows out of the inputs due to the PNP input stage. This current is virtually constant, independent of the output state.
6. The response time specified is for a 100 mV input step with 5.0 mV overdrive. For larger signals, 300 ns is typical.

Figure 2. Inverting Comparator with Hystersis

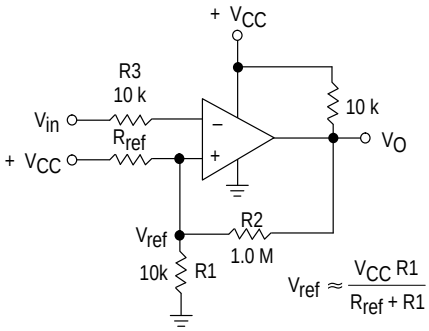

$$V_{ref} \approx \frac{V_{CC}\,R1}{R_{ref} + R1}$$

$$R3 \simeq R1 \,/\!/\, R_{ref} \,/\!/\, R2$$

$$V_H = \frac{R1 \,/\!/\, R_{ref}}{R1 \,/\!/\, R_{ref} + R2}\,[V_{O(max)} - V_{O(min)}]$$

$$R2 \gg Rref \,/\!/\, R1$$

Figure 3. Noninverting Comparator with Hysteresis

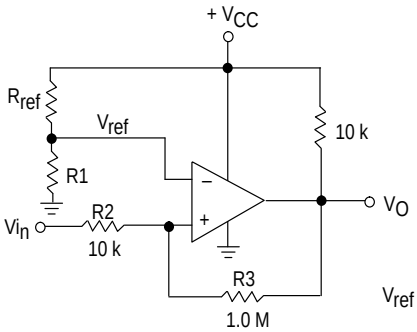

$$V_{ref} = \frac{V_{CC}\,R1}{R_{ref} + R1}$$

$$R2 \approx R1 \,/\!/\, R_{ref}$$

Amount of Hysteresis V_H

$$V_H = \frac{R2}{R2 + R3}\,[(V_{O(max)} - V_{O(min)}]$$

Typical Characteristics

(V_{CC} = 15 Vdc, T_A = +25°C (each comparator) unless otherwise noted.)

Figure 4. Normalized Input Offset Voltage

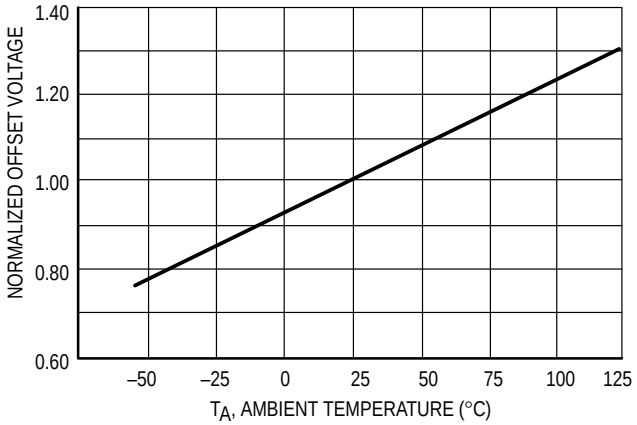

Figure 5. Input Bias Current

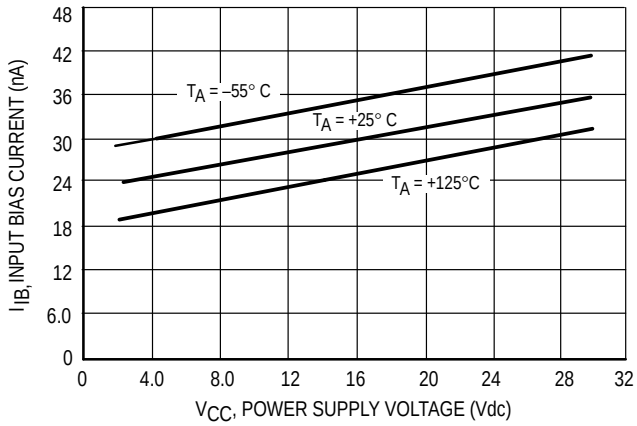

Figure 6. Output Sink Current versus Output Saturation Voltage

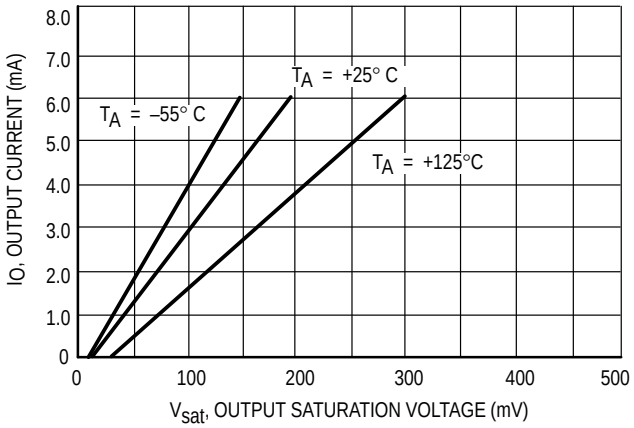

Figure 7. Driving Logic

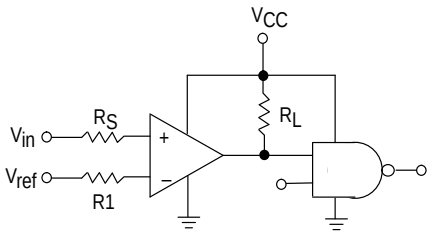

R_S = Source Resistance
$R1 \simeq R_S$

Logic	Device	V_{CC} (V)	R_L kΩ
CMOS	1/4 MC14001	+15	100
TTL	1/4 MC7400	+5.0	10

Figure 8. Squarewave Oscillator

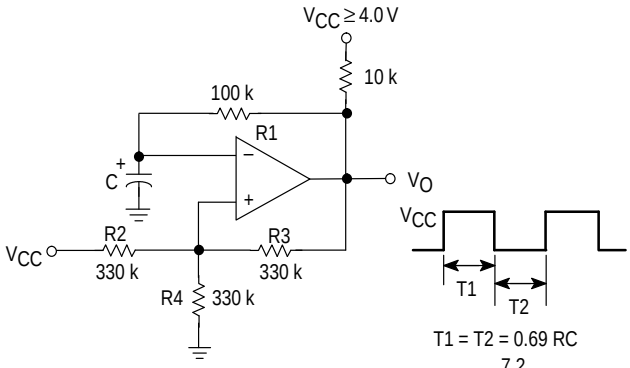

T1 = T2 = 0.69 RC

$f \approx \frac{7.2}{C(\mu F)}$

R2 = R3 = R4

$R1 \approx R2 // R3 // R4$

APPLICATIONS INFORMATION

These quad comparators feature high gain, wide bandwidth characteristics. This gives the device oscillation tendencies if the outputs are capacitively coupled to the inputs via stray capacitance. This oscillation manifests itself during output transitions (V_{OL} to V_{OH}). To alleviate this situation input resistors < 10 kΩ should be used. The addition of positive feedback (< 10 mV) is also recommended. It is good design practice to ground all unused input pins.

Differential input voltages may be larger than supply voltages without damaging the comparator's inputs. Voltages more negative than –300 mV should not be used.

Figure 9. Zero Crossing Detector (Single Supply)

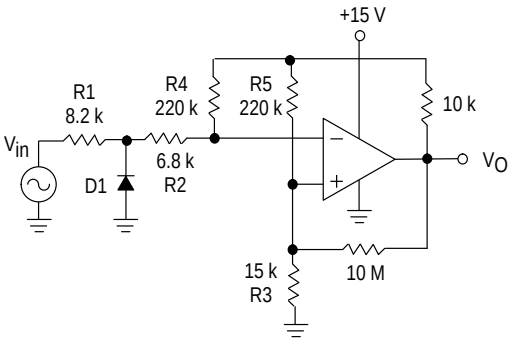

D1 prevents input from going negative by more than 0.6 V.

R1 + R2 = R3

$R3 \leq \frac{R5}{10}$ for small error in zero crossing

Figure 10. Zero Crossing Detector (Split Supplies)

$V_{in(min)} \approx 0.4$ V peak for 1% phase distortion (ΔΘ).

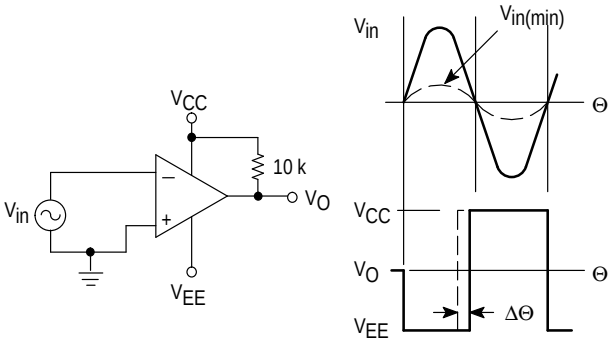

OUTLINE DIMENSIONS

N, P SUFFIX
PLASTIC PACKAGE
CASE 646–06
ISSUE L

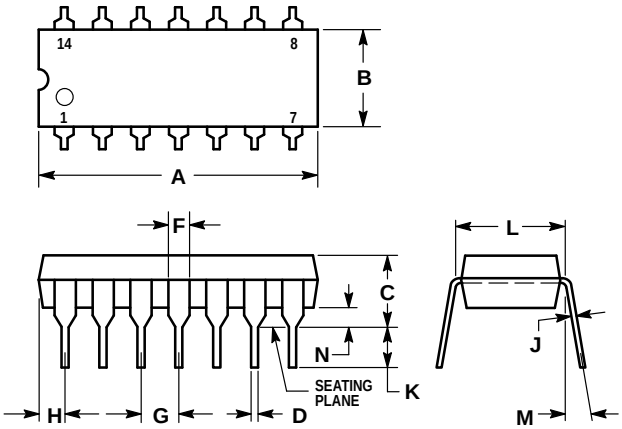

NOTES:
1. LEADS WITHIN 0.13 (0.005) RADIUS OF TRUE POSITION AT SEATING PLANE AT MAXIMUM MATERIAL CONDITION.
2. DIMENSION L TO CENTER OF LEADS WHEN FORMED PARALLEL.
3. DIMENSION B DOES NOT INCLUDE MOLD FLASH.
4. ROUNDED CORNERS OPTIONAL.

	INCHES		MILLIMETERS	
DIM	MIN	MAX	MIN	MAX
A	0.715	0.770	18.16	19.56
B	0.240	0.260	6.10	6.60
C	0.145	0.185	3.69	4.69
D	0.015	0.021	0.38	0.53
F	0.040	0.070	1.02	1.78
G	0.100 BSC		2.54 BSC	
H	0.052	0.095	1.32	2.41
J	0.008	0.015	0.20	0.38
K	0.115	0.135	2.92	3.43
L	0.300 BSC		7.62 BSC	
M	0°	10°	0°	10°
N	0.015	0.039	0.39	1.01

D SUFFIX
PLASTIC PACKAGE
CASE 751A–03
(SO–14)
ISSUE F

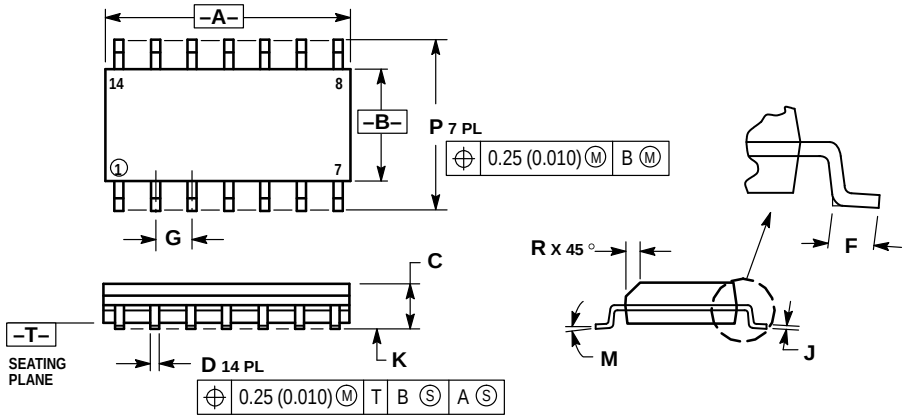

NOTES:
1. DIMENSIONING AND TOLERANCING PER ANSI Y14.5M, 1982.
2. CONTROLLING DIMENSION: MILLIMETER.
3. DIMENSIONS A AND B DO NOT INCLUDE MOLD PROTRUSION.
4. MAXIMUM MOLD PROTRUSION 0.15 (0.006) PER SIDE.
5. DIMENSION D DOES NOT INCLUDE DAMBAR PROTRUSION. ALLOWABLE DAMBAR PROTRUSION SHALL BE 0.127 (0.005) TOTAL IN EXCESS OF THE D DIMENSION AT MAXIMUM MATERIAL CONDITION.

	MILLIMETERS		INCHES	
DIM	MIN	MAX	MIN	MAX
A	8.55	8.75	0.337	0.344
B	3.80	4.00	0.150	0.157
C	1.35	1.75	0.054	0.068
D	0.35	0.49	0.014	0.019
F	0.40	1.25	0.016	0.049
G	1.27 BSC		0.050 BSC	
J	0.19	0.25	0.008	0.009
K	0.10	0.25	0.004	0.009
M	0°	7°	0°	7°
P	5.80	6.20	0.228	0.244
R	0.25	0.50	0.010	0.019

How to reach us:
USA / EUROPE / Locations Not Listed: Motorola Literature Distribution;
P.O. Box 20912; Phoenix, Arizona 85036. 1–800–441–2447 or 602–303–5454

MFAX: RMFAX0@email.sps.mot.com – TOUCHTONE 602–244–6609
INTERNET: http://Design–NET.com

JAPAN: Nippon Motorola Ltd.; Tatsumi–SPD–JLDC, 6F Seibu–Butsuryu–Center,
3–14–2 Tatsumi Koto–Ku, Tokyo 135, Japan. 03–81–3521–8315

ASIA / PACIFIC: Motorola Semiconductors H.K. Ltd.; 8B Tai Ping Industrial Park,
51 Ting Kok Road, Tai Po, N.T., Hong Kong. 852–26629298

MOTOROLA