查询SSOP24供应商 捷多邦，专业PCB打样工厂，24小时加急出货

DIMENSIONS						
REF.	mm			inch		
	MIN.	TYP.	MAX.	MIN.	TYP.	MAX.
A			2			0.079
A1	0.05			0.002		
A2	1.65	1.75	1.85	0.065	0.069	0.073
b	0.22		0.38	0.009		0.015
c	0.09		0.25	0.004		0.010
D	7.9	8.2	8.5	0.311	0.323	0.335
E	7.4	7.8	8.2	0.291	0.307	0.323
E1	5.00	5.3	5.6	0.197	0.209	0.220
e		0.65			0.0256	
K	0°		8°	0°		8°
L	0.55	0.75	0.95	0.022	0.030	0.037

PACKAGE AND PACKING INFORMATION

24-LEAD SHRINK SMALL OUTLINE PACKAGE

Weight: not available

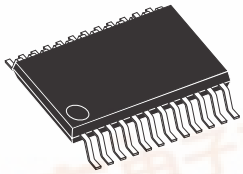

SSOP24

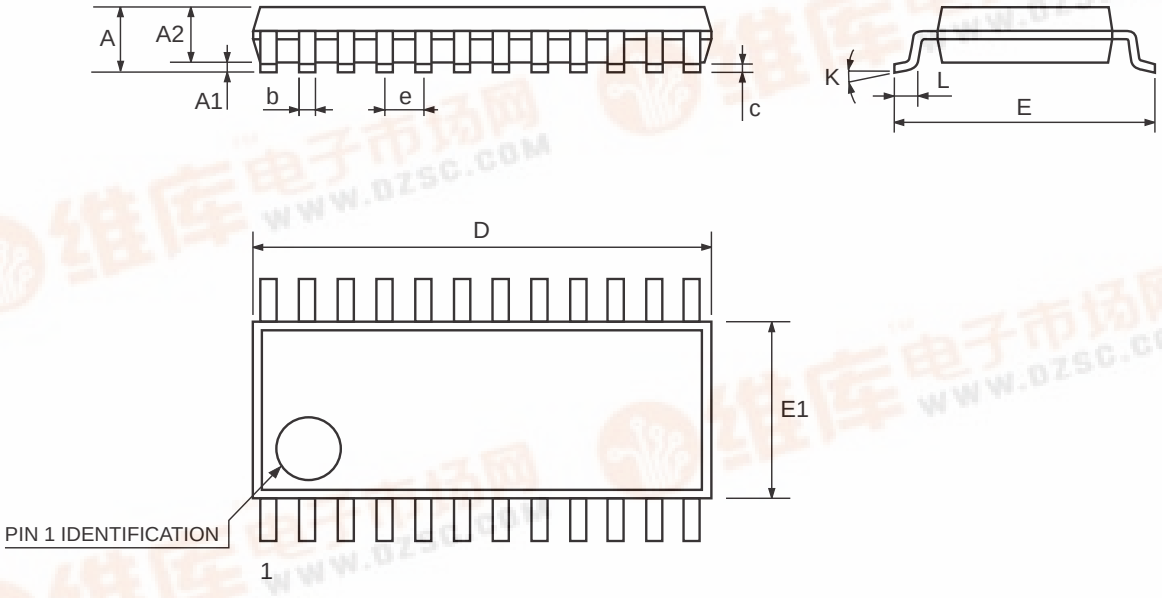

找PDF 维库一下 pdf.dzsc.com

TAPE & REEL SHIPMENT INFORMATION

TAPE SPECIFICATIONS

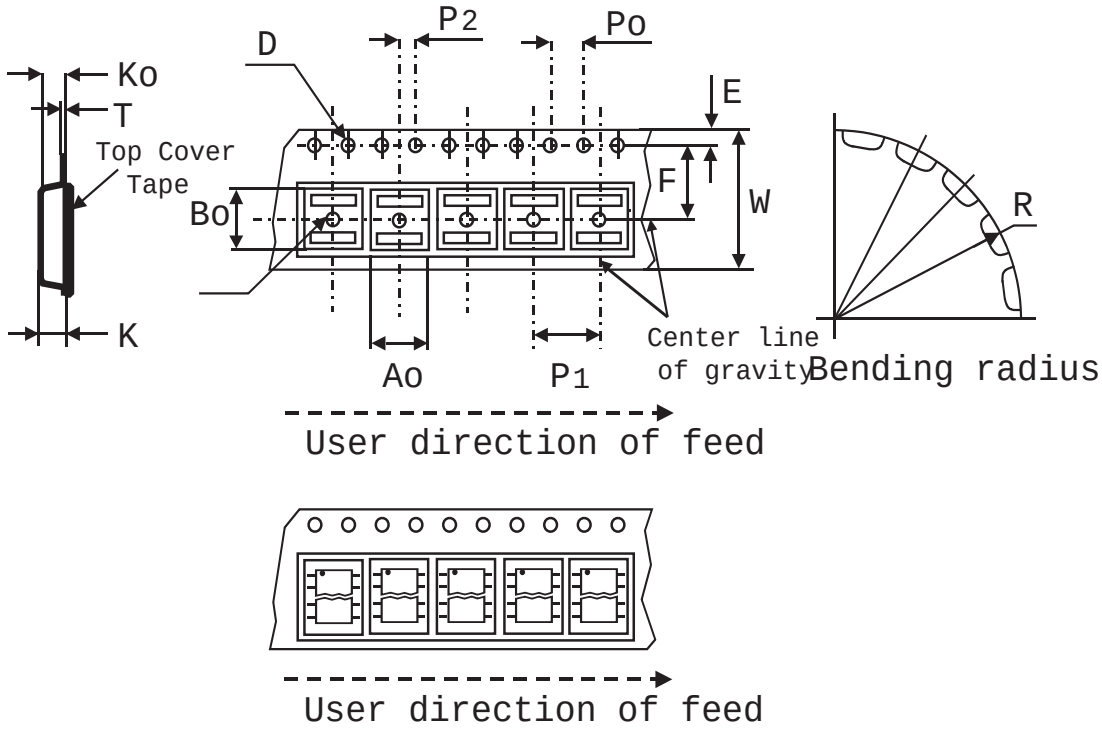

TAPE MECHANICAL DATA		
	mm.	inch
D	1.50 +0.1/0	0.059 +0.004/0
E	1.75 ±0.1	0.069 ±0.004
Po	4.00 ±0.1	0.157 ±0.004
T max.	0.40	0.016
D1 min.	1.50	0.059
F	7.5 ±0.05	0.295 ±0.002
K max.	6.50	0.256
P2	2.00 ±0.05	0.079 ±0.002
R	40	1.575
W	16.00 ±0.30	0.630 ±0.012
P1	12.00	0.472
Ao, Bo, Ko	0.05 min to 0.90 max.	0.002 min to 0.035 max.

BASE QUANTITY	1350 pcs.
BULK QUANTITY	1350 pcs.

TAPE & REEL SHIPMENT INFORMATION

REEL SPECIFICATIONS

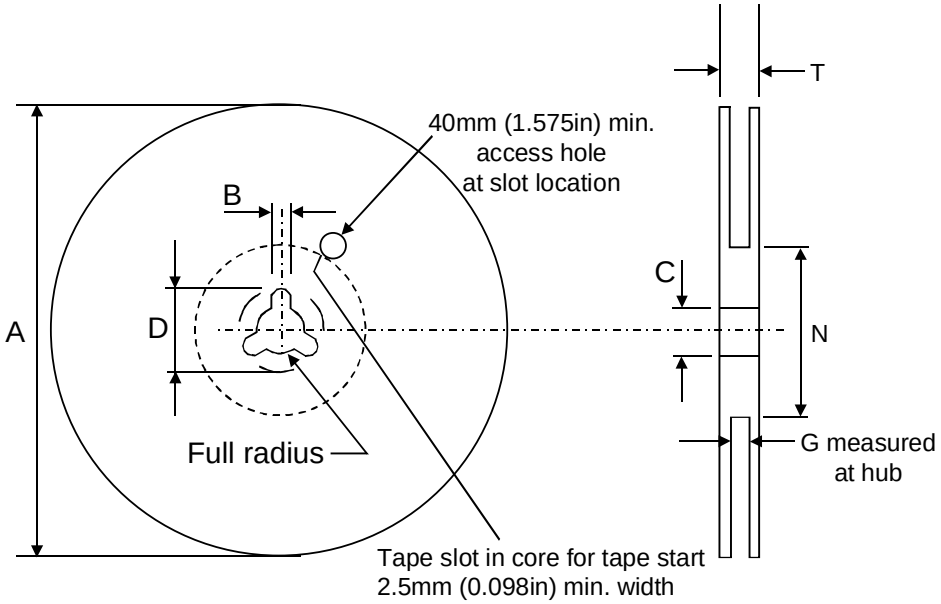

REEL MECHANICAL DATA		
	mm.	inch
Tape size	16.0 ±0.30	0.630 ±0.012
A max.	330.0	12.992
B min.	1.5	0.059
C	13.0 ±0.20	0.512 ±0.008
D min.	20.2	0.795
N min.	60	2.362
G	16.4 +2/-0	0.646 +0.079/-0
T max.	22.4	0.882

FOOTPRINT RECOMMENDED DATA

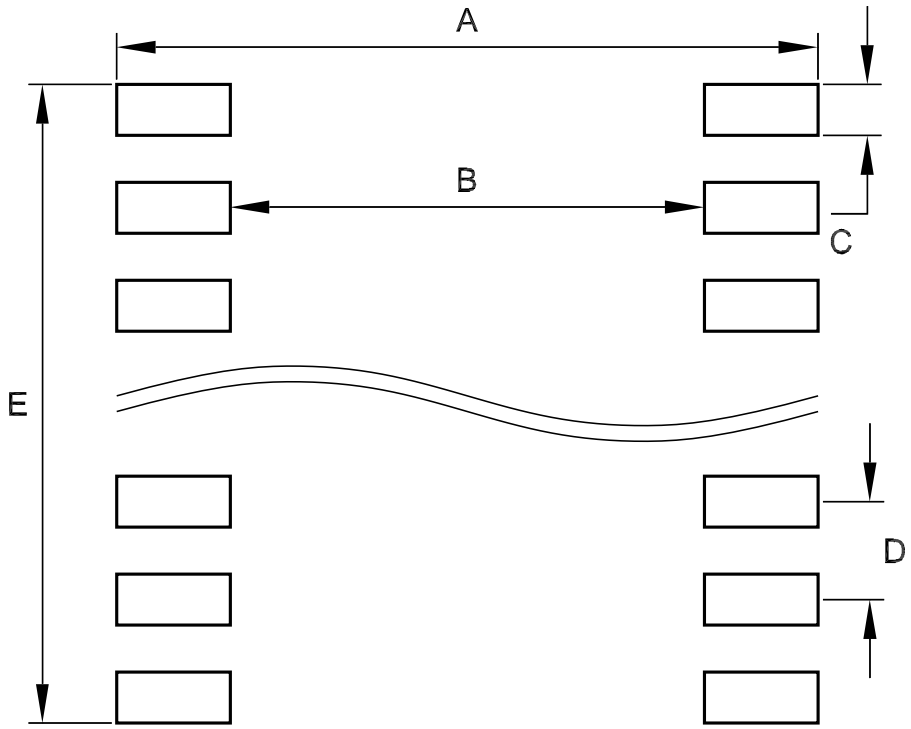

FOOTPRINT DATA		
	mm.	inch
A	9.02	0.355
B	6.16	0.242
C	0.46	0.018
D	0.65	0.025
E	7.61	0.300