XC6203 Series

查询XC6203供应商

ETR0303_001

Large Current Positive Voltage Regulators

■GENERAL DESCRIPTION

The XC6203 series are highly precise, low power consumption, positive voltage regulators manufactured using CMOS and laser trimming technologies.

The series provides large currents with a significantly small dropout voltage.

The XC6203P consists of a driver transistor, a current limiter, a precision reference voltage and an error amplifier. The XC6203E is also available but without the current limiter function. Output voltage is selectable in 0.1V increments between a voltage of 1.8V and 6.0V.

SOT-23 (150mW), SOT-89 (500mW), SOT-223 (1200mW) and TO-92 (300mW) package are available.

■APPLICATIONS

- ●Battery powered equipment
- ●Reference voltage sources
- ●Cameras, video cameras
- ●CD-ROMs, DVDs
- ●Palmtops
- ●Portable audio video equipment

■FEATURES

Maximum Output Current : More than 400mA (3.3V)

Maximum Operating Voltage : 8.0V

Output Voltage Range : 1.8V ~ 6.0V (selectable in 0.1V increments)

Highly Accurate : ±2%

Low Power Consumption : 8.0μA (TYP.)

Line Regulation : 0.2% / V (TYP.)

Output Voltage Temperature Characteristics : ±100ppm/℃ (TYP.)

Operational Temperature Range : -40℃ ~ 85℃

Dropout Voltage : 150mV @ 100mA, 300mV @ 200mA

Ultra Small Packages : SOT-23, SOT-89, SOT-223, TO-92

■TYPICAL APPLICATION CIRCUIT

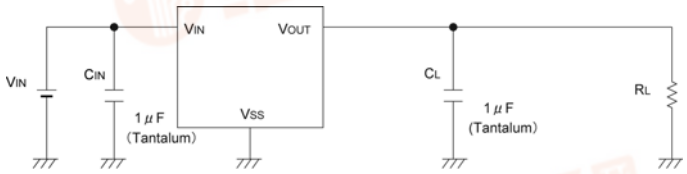

■TYPICAL PERFORMANCE CHARACTERISTICS

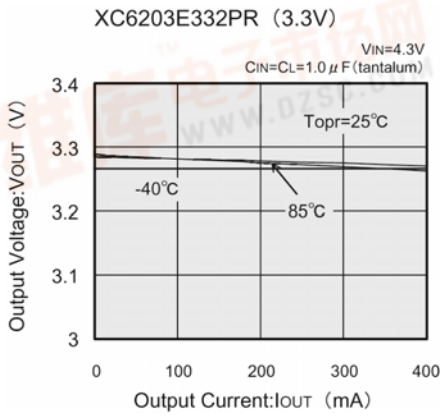

找PDF 维库一下 pdf.dzsc.com

查询XC6203供应商

■PIN CONFIGURATION

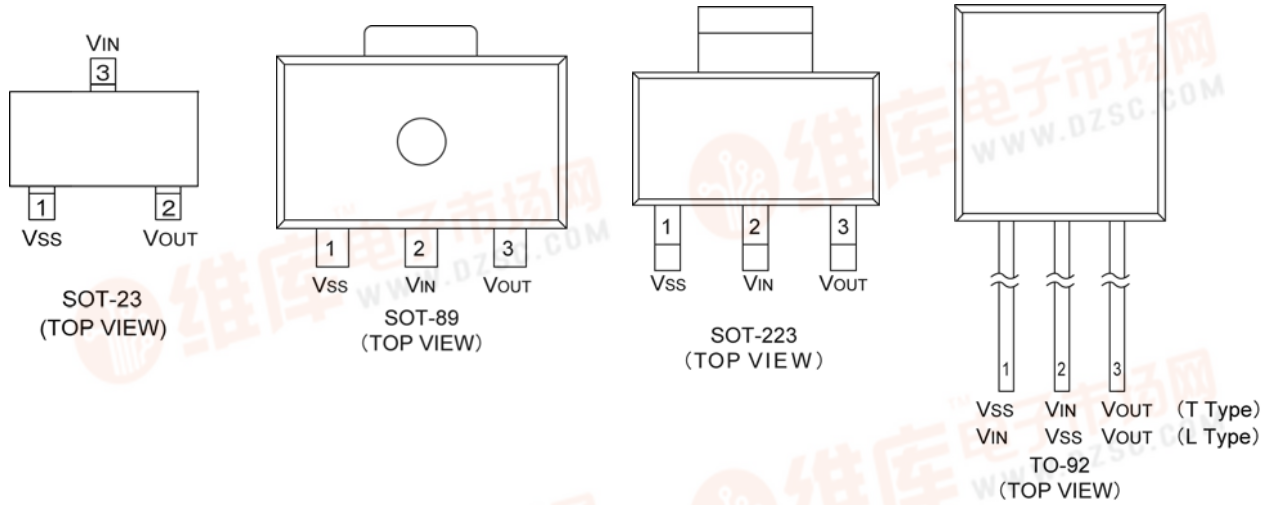

■PIN ASSIGNMENT

PIN NUMBER			PIN NAME	FUNCTION
SOT-23	SOT-89/SOT-223/TO-92 (T)	TO-92(L)		
1	1	2	VSS	Ground
3	2	1	VIN	Power Input
2	3	3	VOUT	Output

■PRODUCT CLASSIFICATION

●Ordering Information

XC6203 ①②③④⑤⑥

DESIGNATOR	DESCRIPTION	SYMBOL	DESCRIPTION
①	Type of Regulator	P	: Current limiter circuit built-in
		E	: No current limiter circuit built-in
② ③ ④	Output Voltage	18~60, A	: e.g. 252:2.5V, Accuracy ±2% 28A:2.85V, Accuracy ±2%* * "A" indicates voltage of 50mV increments
⑤	Package	M	: SOT-23
		P	: SOT-89
		F	: SOT-223
		T	: TO-92 (Standard)
		L	: TO-92 (Custom pin configuration) (Discontinued Product)
⑥	Device Orientation	R	: Embossed tape, standard feed
		L	: Embossed tape, reverse feed
		H	: Paper type (TO-92)
		B	: Bag (TO-92)

找PDF 维库一下 pdf.dzsc.com

查询XC6203供应商

■BLOCK DIAGRAMS

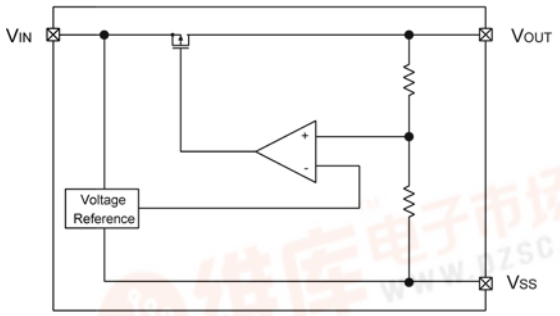

XC6203E

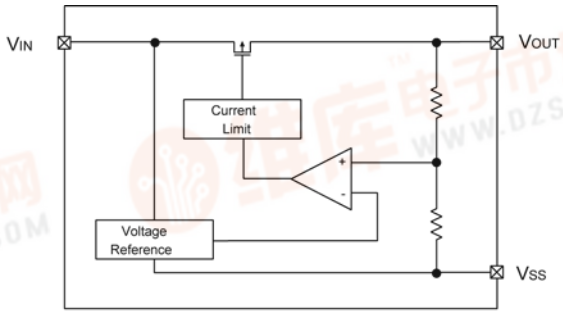

XC6203P

■ABSOLUTE MAXIMUM RATINGS

Ta = 25℃

PARAMETER		SYMBOL	RATINGS	UNITS
Input Voltage		VIN	12	V
Output Current		IOUT	500	mA
Output Voltage		VOUT	VSS-0.3～VIN+0.3	V
Power Dissipation	SOT-23	Pd	150	mW
	SOT-89		500	
	SOT-223		1,200 (*)	
	TO-92		300	
Operating Temperature Range		Topr	-40～+85	℃
Storage Temperature Range		Tstg	-55～+125	℃

*: Circuits board mounting: Double-sided board

pdf.dzsc.com

查询XC6203供应商

■ELECTRICAL CHARACTERISTICS

XC6203X182 $V_{OUT(T)}$ = 1.8V (*1) Ta=25℃

PARAMETER	SYMBOL	CONDITIONS	MIN.	TYP.	MAX.	UNITS
Output Voltage	$V_{OUT(E)}$ (*2)	V_{IN}=2.8V I_{OUT}=40mA	1.764	1.800	1.836	V
Maximum Output Current	I_{OUTmax}	V_{IN}=2.8V $V_{OUT} \geqq V_{OUT(E)} \times 0.90$	400	-	-	mA
Load Regulation	$\triangle V_{OUT}$	V_{IN}=2.8V 1mA≦I_{OUT}≦200mA	-	40	100	mV
Dropout Voltage (*3)	Vdif1	I_{OUT}=100mA	-	200	300	mV
	Vdif2	I_{OUT}=200mA	-	400	600	
Supply Current	I_{SS}	V_{IN}=2.8V	-	8.0	16.0	μA
Line Regulation	$\frac{\triangle V_{OUT}}{\triangle V_{IN} \cdot \triangle V_{OUT}}$	I_{OUT}=40mA 2.8V≦V_{IN}≦8.0V	-	0.2	0.3	%/V
Input Voltage	V_{IN}		-	-	8	V
Output Voltage Temperature Characteristics	$\frac{\triangle V_{OUT}}{\triangle Topr \cdot V_{OUT}}$	I_{OUT}=40mA -40℃≦Topr≦85℃	-	±100	-	ppm /℃
Short-Circuit Current (XC6203P Series Only)	I_{lim}	V_{IN}=2.8V V_{OUT}=0V	-	60	-	mA

NOTE:
*1: $V_{OUT(T)}$ = Specified output voltage.
*2: $V_{OUT(E)}$ = Effective output voltage
(i.e. the output voltage when "$V_{OUT(T)}$+1.0V" is provided at the V_{IN} pin while maintaining a certain I_{OUT} value).
*3: Vdif = V_{IN1} - V_{OUT1}
*4: V_{OUT1} = A voltage equal to 98% of the output voltage when "$V_{OUT(T)}$ + 1.0V" is input.
*5: V_{IN1} = The input voltage when V_{OUT1} appears as input voltage is gradually decreased.

XC6203X252 $V_{OUT(T)}$ = 2.5V (*1) Ta=25℃

PARAMETER	SYMBOL	CONDITIONS	MIN.	TYP.	MAX.	UNITS
Output Voltage	$V_{OUT(E)}$ (*2)	V_{IN}=3.5V I_{OUT}=40mA	2.450	2.500	2.550	V
Maximum Output Current	I_{OUTmax}	V_{IN}=3.5V $V_{OUT} \geqq V_{OUT(E)} \times 0.93$	400	-	-	mA
Load Regulation	$\triangle V_{OUT}$	V_{IN}=3.5V 1mA≦I_{OUT}≦200mA	-	40	100	mV
Dropout Voltage (*3)	Vdif1	I_{OUT}=100mA	-	170	250	mV
	Vdif2	I_{OUT}=200mA	-	320	500	
Supply Current	I_{SS}	V_{IN}=3.5V	-	8.0	16.0	μA
Line Regulation	$\frac{\triangle V_{OUT}}{\triangle V_{IN} \cdot \triangle V_{OUT}}$	I_{OUT}=40mA 3.5V≦V_{IN}≦8.0V	-	0.2	0.3	%/V
Input Voltage	VIN		-	-	8	V
Output Voltage Temperature Characteristics	$\frac{\triangle V_{OUT}}{\triangle Topr \cdot V_{OUT}}$	I_{OUT}=40mA -40℃≦Topr≦85℃	-	±100	-	ppm /℃
Short-Circuit Current (XC6203P Series Only)	I_{lim}	V_{IN}=3.5V V_{OUT}=0V	-	60	-	mA

NOTE:
*1: $V_{OUT(T)}$ = Specified output voltage.
*2: $V_{OUT(E)}$ = Effective output voltage
(i.e. the output voltage when "$V_{OUT(T)}$+1.0V" is provided at the V_{IN} pin while maintaining a certain I_{OUT} value).
*3: Vdif = V_{IN1} - V_{OUT1}
*4: V_{OUT1} = A voltage equal to 98% of the output voltage when "$V_{OUT(T)}$ + 1.0V" is input.
*5: V_{IN1} = The input voltage when V_{OUT1} appears as input voltage is gradually decreased.

找PDF 维库一下 pdf.dzsc.com

查询XC6203供应商

■ELECTRICAL CHARACTERISTICS (Continued)

XC6203X302 $V_{OUT(T)}$ = 3.0V (*1) Ta=25℃

PARAMETER	SYMBOL	CONDITIONS	MIN.	TYP.	MAX.	UNITS
Output Voltage	$V_{OUT(E)}$ (*2)	V_{IN}=4V I_{OUT}=40mA	2.940	3.000	3.060	V
Maximum Output Current	I_{OUTmax}	V_{IN}=4V $V_{OUT} \geqq V_{OUT(E)} \times 0.96$	400	-	-	mA
Load Regulation	$\triangle V_{OUT}$	V_{IN}=4V 1mA≦I_{OUT}≦200mA	-	40	100	mV
Dropout Voltage (*3)	Vdif1	I_{OUT}=100mA	-	150	220	mV
	Vdif2	I_{OUT}=200mA	-	300	420	
Supply Current	I_{SS}	V_{IN}=4V	-	8.0	16.0	μA
Line Regulation	$\frac{\triangle V_{OUT}}{\triangle V_{IN} \cdot \triangle V_{OUT}}$	I_{OUT}=40mA 4V≦V_{IN}≦8.0V	-	0.2	0.3	%/V
Input Voltage	V_{IN}		-	-	8.0	V
Output Voltage Temperature Characteristics	$\frac{\triangle V_{OUT}}{\triangle Topr \cdot V_{OUT}}$	I_{OUT}=40mA -40℃≦Topr≦85℃	-	±100	-	ppm /℃
Short-Circuit Current (XC6203P Series Only)	I_{lim}	V_{IN}=4V V_{OUT}=0V	-	60	-	mA

NOTE:
*1: $V_{OUT(T)}$ = Specified output voltage.
*2: $V_{OUT(E)}$ = Effective output voltage
(i.e. the output voltage when "$V_{OUT(T)}$+1.0V" is provided at the V_{IN} pin while maintaining a certain I_{OUT} value).
*3: Vdif = V_{IN1} - V_{OUT1}
*4: V_{OUT1} = A voltage equal to 98% of the output voltage when "$V_{OUT(T)}$ + 1.0V" is input.
*5: V_{IN1} = The input voltage when V_{OUT1} appears as input voltage is gradually decreased.

XC6203X332 $V_{OUT(T)}$ = 3.3V (*1) Ta=25℃

PARAMETER	SYMBOL	CONDITIONS	MIN.	TYP.	MAX.	UNITS
Output Voltage	$V_{OUT(E)}$ (*2)	V_{IN}=4.3V I_{OUT}=40mA	2.940	3.300	3.366	V
Maximum Output Current	I_{OUTmax}	V_{IN}=4.3V $V_{OUT} \geqq V_{OUT(E)} \times 0.96$	400	-	-	mA
Load Regulation	$\triangle V_{OUT}$	V_{IN}=4.3V 1mA≦I_{OUT}≦200mA	-	40	100	mV
Dropout Voltage (*3)	Vdif1	I_{OUT}=100mA	-	150	220	mV
	Vdif2	I_{OUT}=200mA	-	300	420	
Supply Current	I_{SS}	V_{IN}=4.3V	-	8.0	16.0	μA
Line Regulation	$\frac{\triangle V_{OUT}}{\triangle V_{IN} \cdot \triangle V_{OUT}}$	I_{OUT}=40mA 4.3V≦V_{IN}≦8.0V	-	0.2	0.3	%/V
Input Voltage	V_{IN}		-	-	8	V
Output Voltage Temperature Characteristics	$\frac{\triangle V_{OUT}}{\triangle Topr \cdot V_{OUT}}$	I_{OUT}=40mA -40℃≦Topr≦85℃	-	±100	-	ppm /℃
Short-Circuit Current (XC6203P Series Only)	I_{lim}	V_{IN}=4.3V V_{OUT}=0V	-	60	-	mA

NOTE:
*1: $V_{OUT(T)}$ = Specified output voltage.
*2: $V_{OUT(E)}$ = Effective output voltage
(i.e. the output voltage when "$V_{OUT(T)}$+1.0V" is provided at the V_{IN} pin while maintaining a certain I_{OUT} value).
*3: Vdif = V_{IN1} - V_{OUT1}
*4: V_{OUT1} = A voltage equal to 98% of the output voltage when "$V_{OUT(T)}$ + 1.0V" is input.
*5: V_{IN1} = The input voltage when V_{OUT1} appears as input voltage is gradually decreased.

pdf.dzsc.com

查询XC6203供应商

■ELECTRICAL CHARACTERISTICS (Continued)

XC6203X502 $V_{OUT(T)}$ = 5.0V (*1) Ta=25℃

PARAMETER	SYMBOL	CONDITIONS	MIN.	TYP.	MAX.	UNITS
Output Voltage	$V_{OUT(E)}$ (*2)	V_{IN}=6.0V I_{OUT}=40mA	4.900	5.000	5.100	V
Maximum Output Current	I_{OUTmax}	V_{IN}=6.0V $V_{OUT} \geqq V_{OUT(E)} \times 0.96$	400	-	-	mA
Load Regulation	$\triangle V_{OUT}$	V_{IN}=6.0V 1mA≦I_{OUT}≦200mA	-	40	100	mV
Dropout Voltage(*3)	Vdif1	I_{OUT}=100mA	-	100	180	mV
	Vdif2	I_{OUT}=200mA	-	200	320	
Supply Current	I_{SS}	V_{IN}=6.0V	-	10.0	20.0	μA
Line Regulation	$\frac{\triangle V_{OUT}}{\triangle V_{IN} \cdot V_{OUT}}$	I_{OUT}=40mA 6.0V≦V_{IN}≦8.0V	-	0.2	0.3	%/V
Input Voltage	V_{IN}		-	-	8.0	V
Output Voltage Temperature Characteristics	$\frac{\triangle V_{OUT}}{\triangle Topr \cdot V_{OUT}}$	I_{OUT}=40mA -40℃≦Topr≦85℃	-	±100	-	ppm/℃
Short-Circuit Current (XC6203P Series Only)	I_{lim}	V_{IN}=6.0V V_{OUT}=0V	-	60	-	mA

NOTE:
*1: $V_{OUT(T)}$ = Specified output voltage.
*2: $V_{OUT(E)}$ = Effective output voltage
(i.e. the output voltage when "$V_{OUT(T)}$+1.0V" is provided at the V_{IN} pin while maintaining a certain I_{OUT} value).
*3: Vdif = V_{IN1} - V_{OUT1}
*4: V_{OUT1} = A voltage equal to 98% of the output voltage when "$V_{OUT(T)}$ + 1.0V" is input.
*5: V_{IN1} = The input voltage when V_{OUT1} appears as input voltage is gradually decreased.

■TYPICAL APPLICATION CIRCUIT

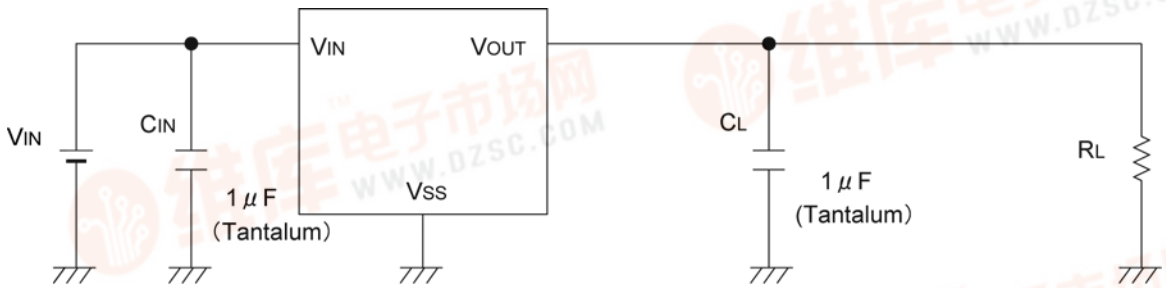

查询XC6203供应商

■TYPICAL PERFORMANCE CHARACTERISTICS

●XC6203E182PR

(1) Output Voltage vs. Output Current

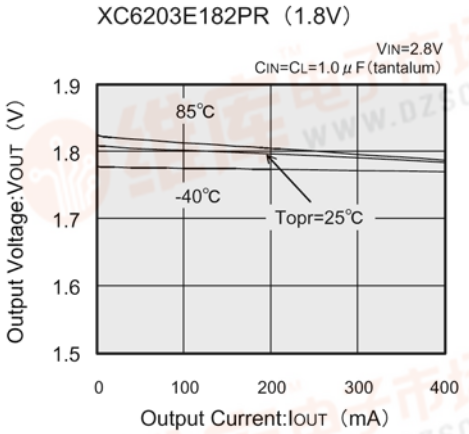

(2) Output Voltage vs. Input Voltage

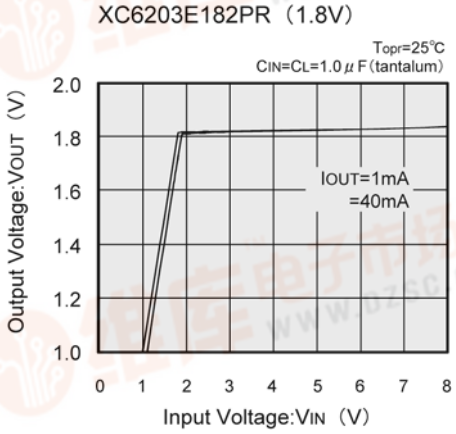

(3) Dropout Voltage vs. Output Current

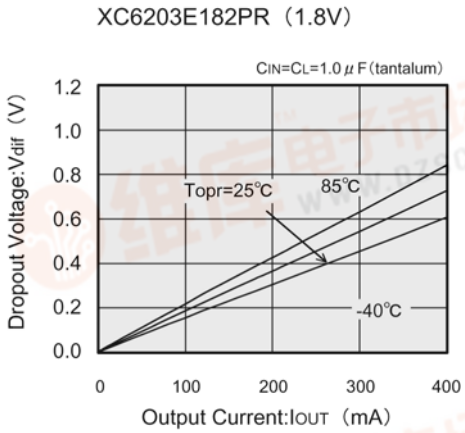

(4) Supply Current vs. Input Voltage

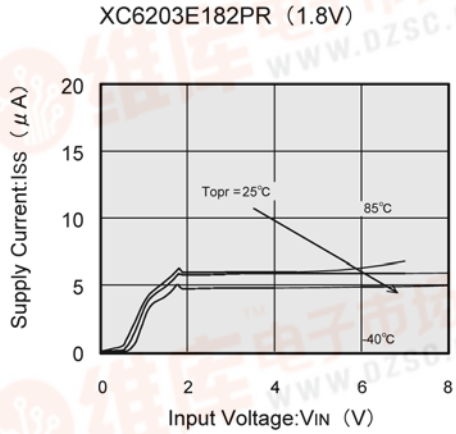

(5) Output Voltage vs. Ambient Temperature

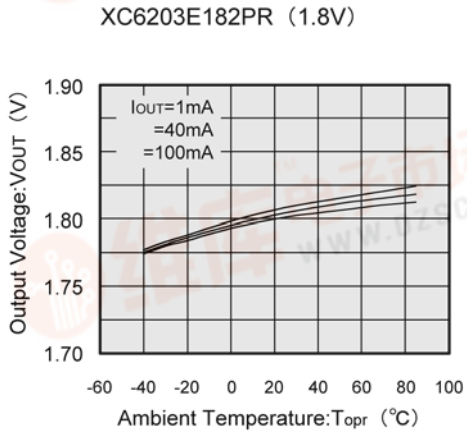

(6) Supply Current vs. Ambient Temperature

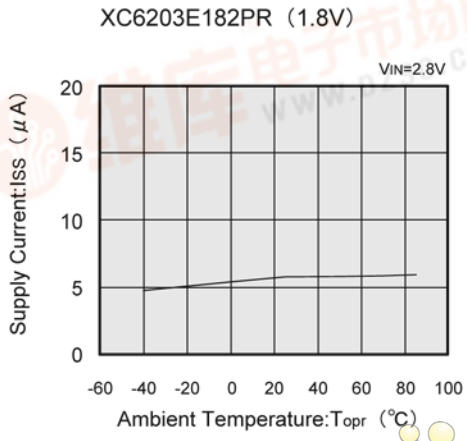

pdf.dzsc.com

查询XC6203供应商

■TYPICAL PERFORMANCE CHARACTERISTICS (Continued)

●XC6203E182PR (Continued)

(7) Input Transient Response

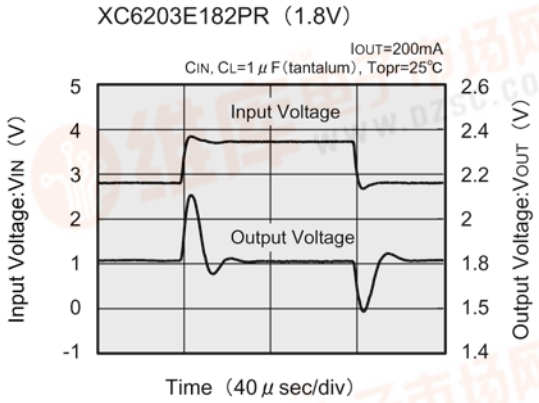

(8) Load Transient Response

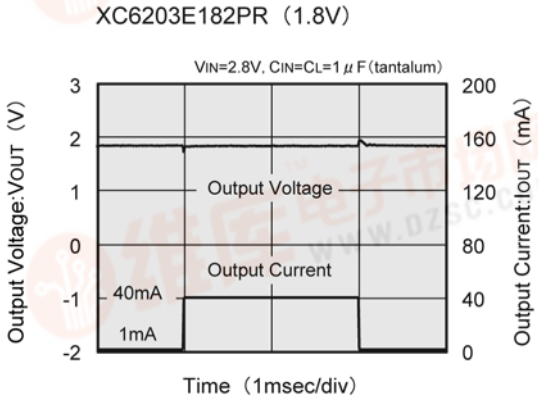

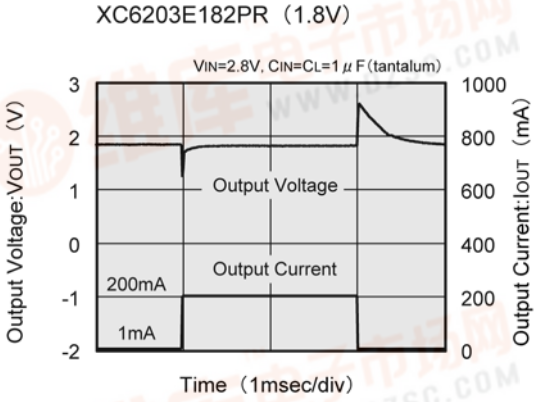

(9) Ripple Rejection Rate

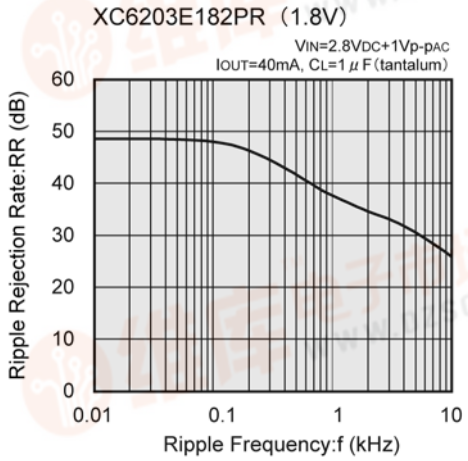

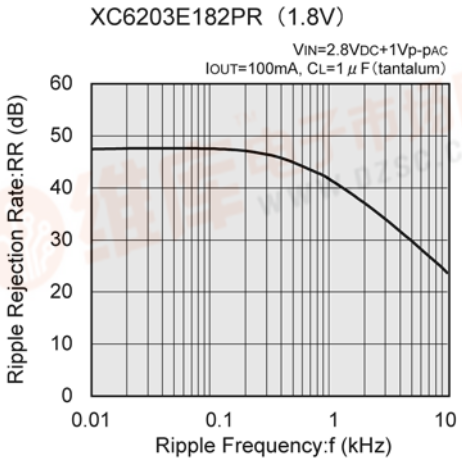

找PDF 维库一下 pdf.dzsc.com

查询XC6203供应商

■TYPICAL PERFORMANCE CHARACTERISTICS (Continued)

●XC6203E252PR

(1) Output Voltage vs. Output Current

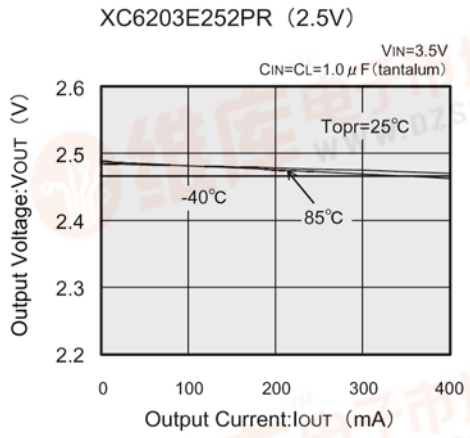

(2) Output Voltage vs. Input Voltage

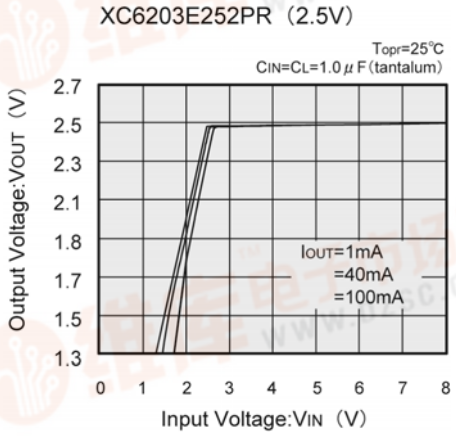

(3) Dropout Voltage vs. Output Current

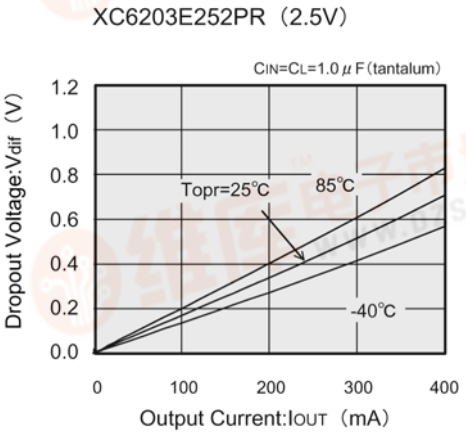

(4) Supply Current vs. Input Voltage

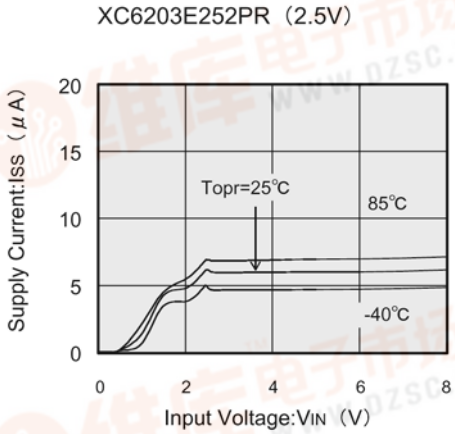

(5) Output Voltage vs. Ambient Temperature

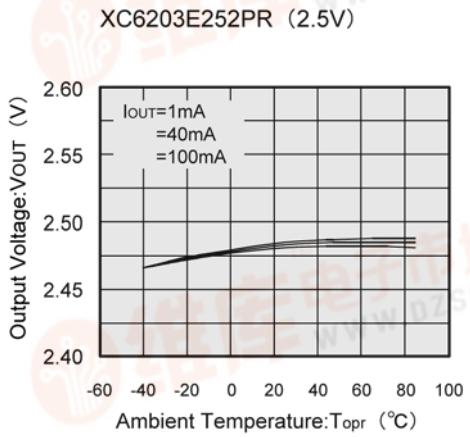

(6) Supply Current vs. Ambient Temperature

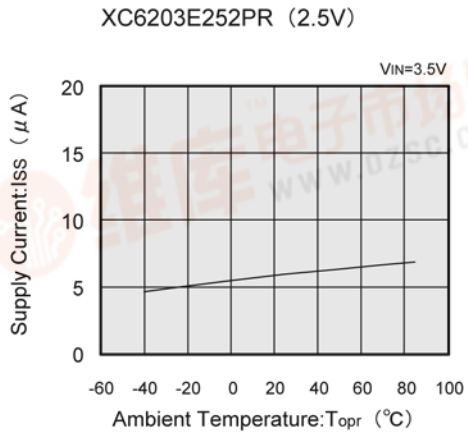

pdf.dzsc.com

查询XC6203供应商

■TYPICAL PERFORMANCE CHARACTERISTICS (Continued)

●XC6203E252PR (Continued)

(7) Input Transient Response

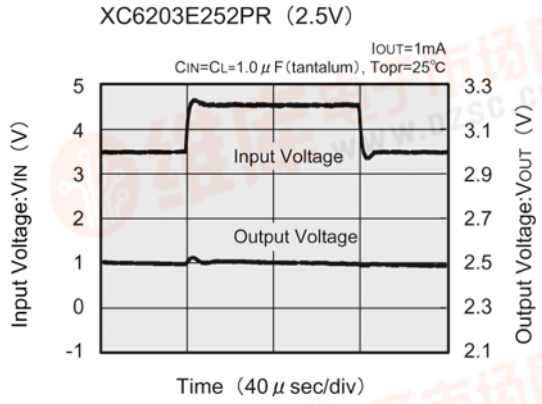

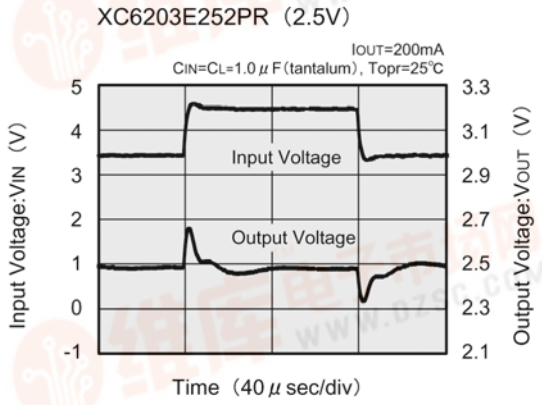

(8) Load Transient Response

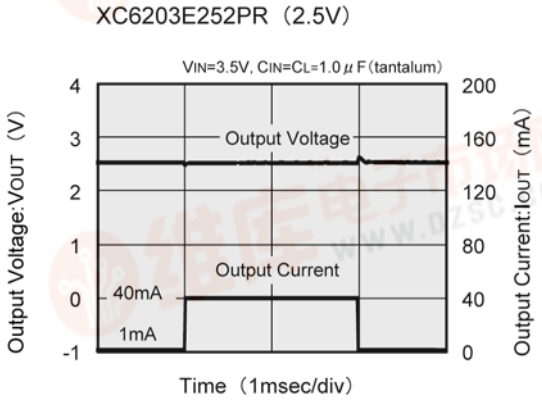

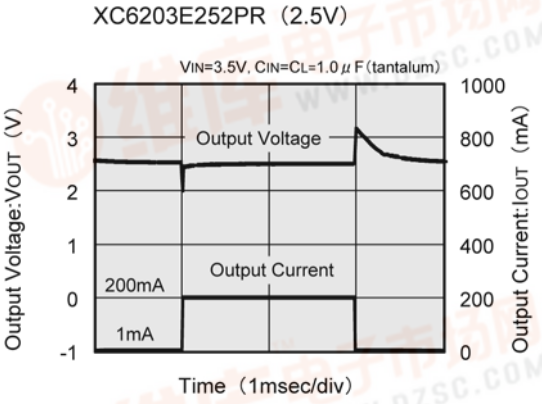

(9) Ripple Rejection Rate

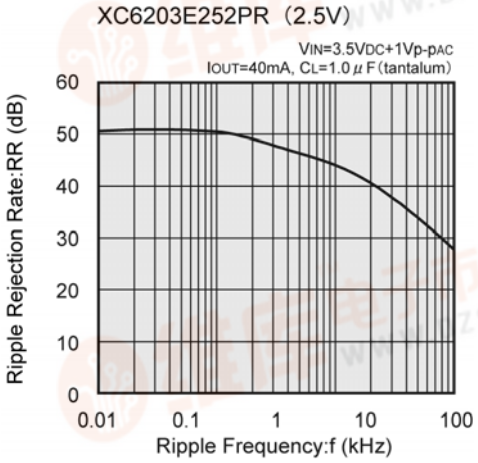

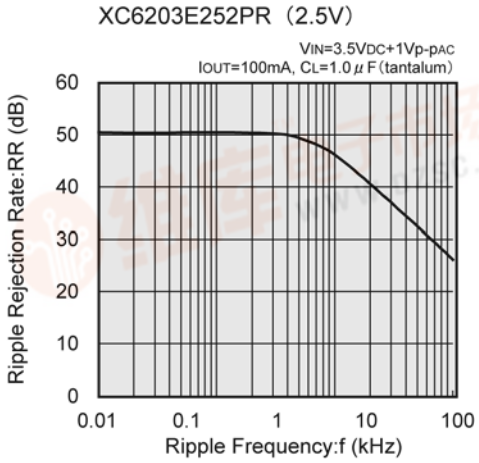

找PDF 维库一下 pdf.dzsc.com

查询XC6203供应商

■TYPICAL PERFORMANCE CHARACTERISTICS (Continued)

●XC6203E332PR

(1) Output Voltage vs. Output Current

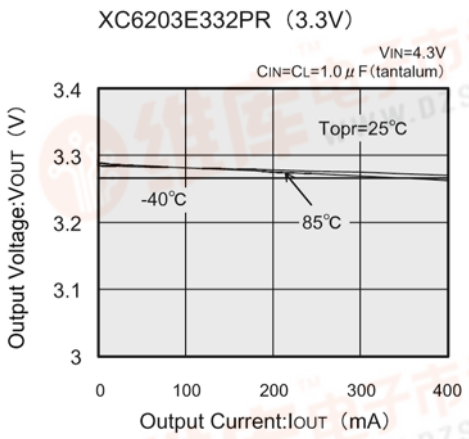

(2) Output Voltage vs. Input Voltage

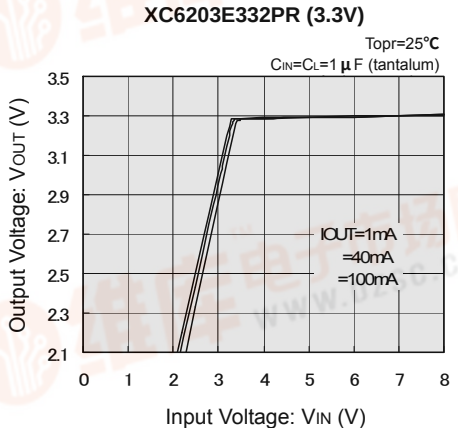

(3) Dropout Voltage vs. Output Current

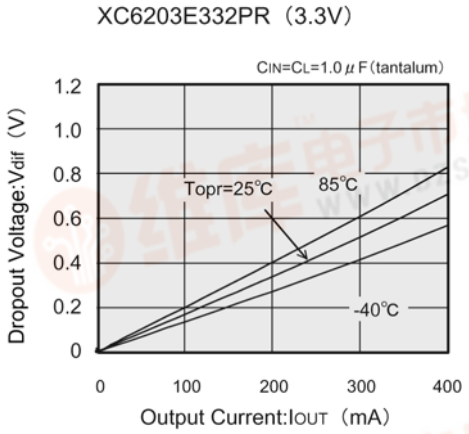

(4) Supply Current vs. Input Voltage

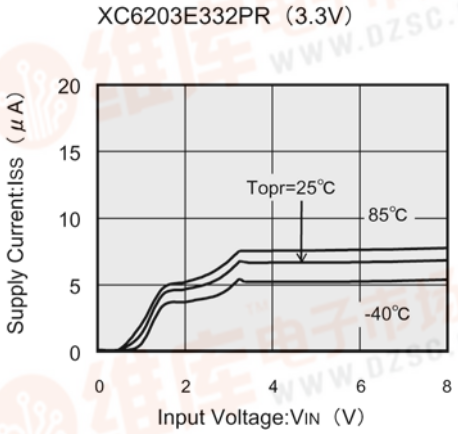

(5) Output Voltage vs. Ambient Temperature

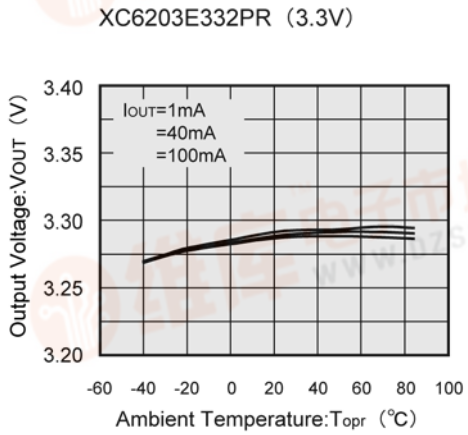

(6) Supply Current vs. Ambient Temperature

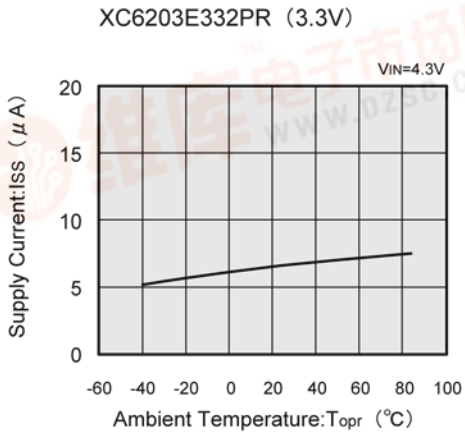

找PDF 维库一下 pdf.dzsc.com

查询XC6203供应商

■TYPICAL PERFORMANCE CHARACTERISTICS (Continued)

●XC6203E332PR (Continued)

(7) Input Transient Response

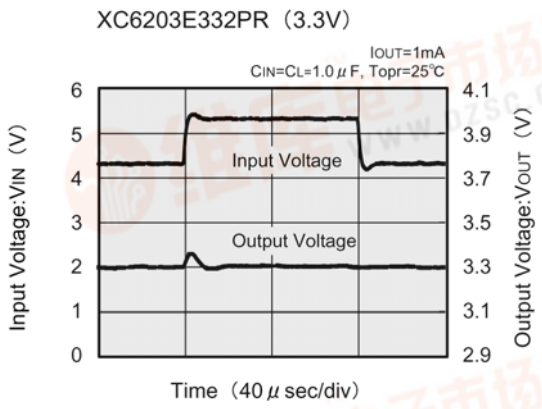

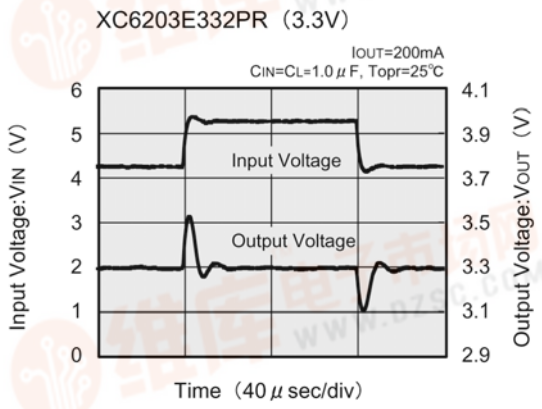

(8) Load Transient Response

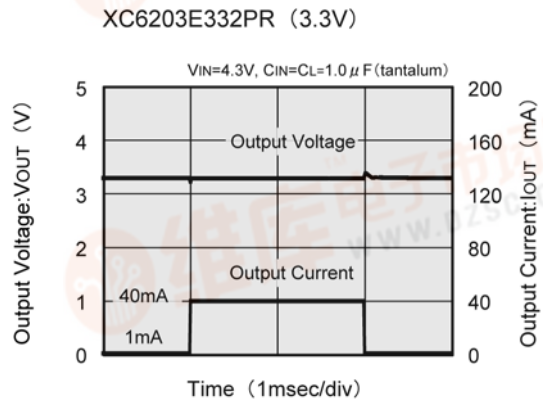

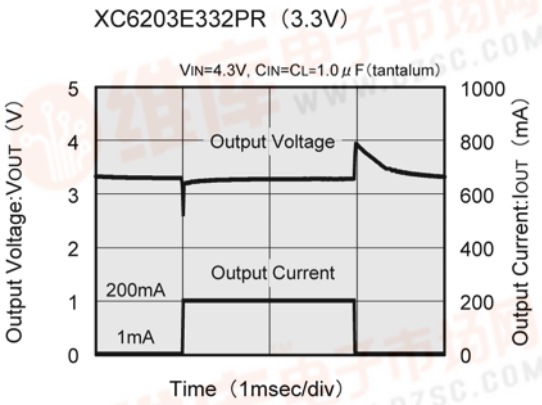

(9) Ripple Rejection Rate

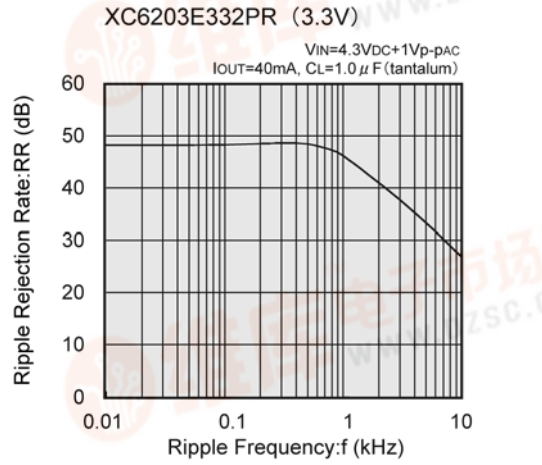

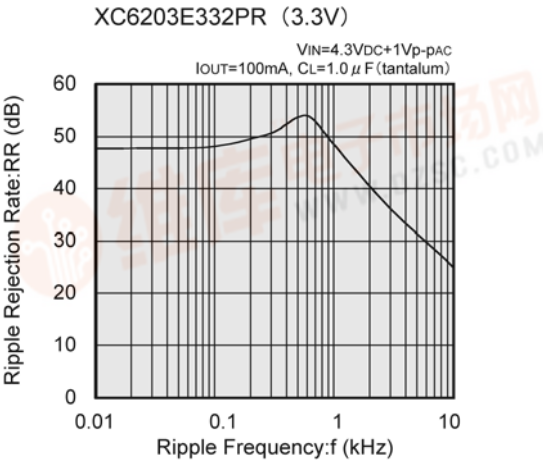

找PDF 维库一下 pdf.dzsc.com

查询XC6203供应商

■TYPICAL PERFORMANCE CHARACTERISTICS (Continued)

●XC6203E502PR

(1) Output Voltage vs. Output Current

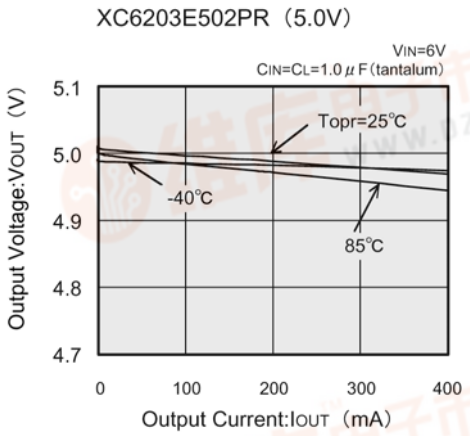

(2) Output Voltage vs. Input Voltage

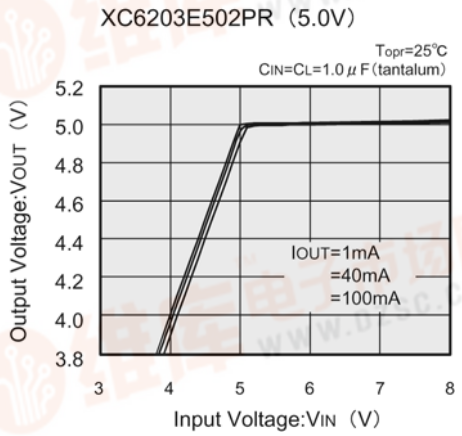

(3) Dropout Voltage vs. Output Current

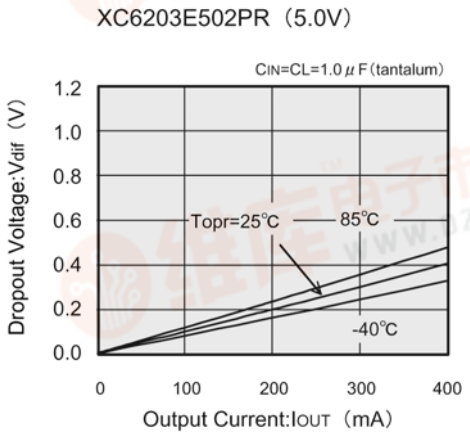

(4) Supply Current vs. Input Voltage

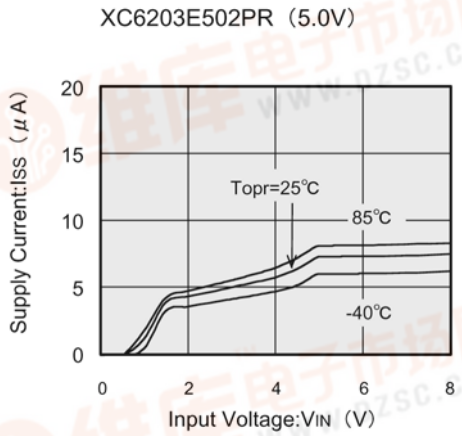

(5) Output Voltage vs. Ambient Temperature

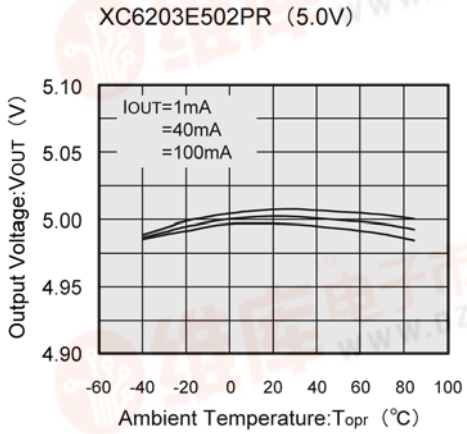

(6) Supply Current vs. Ambient Temperature

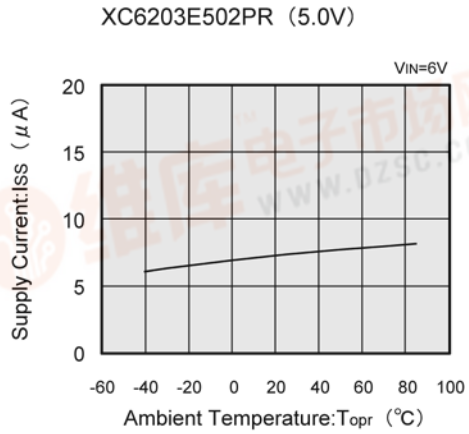

pdf.dzsc.com

查询XC6203供应商

■TYPICAL PERFORMANCE CHARACTERISTICS (Continued)

●XC6203E502PR (Continued)

(7) Input Transient Response

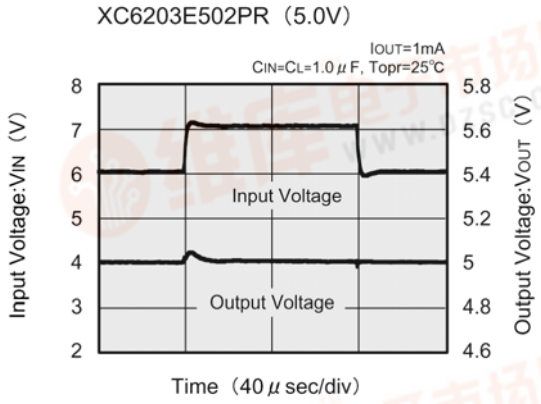

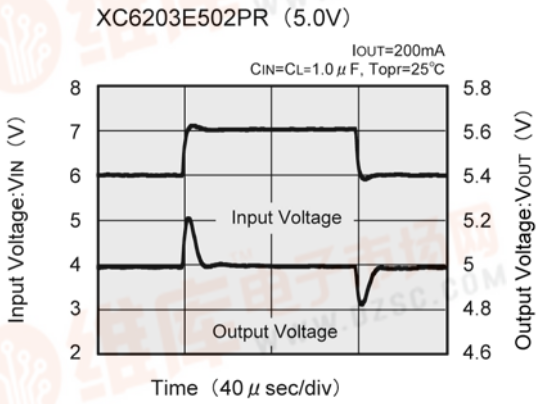

(8) Load Transient Response

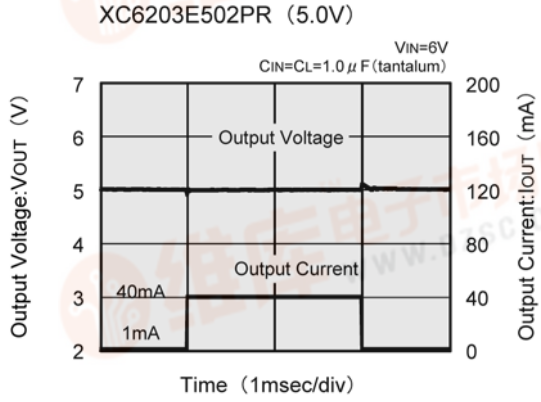

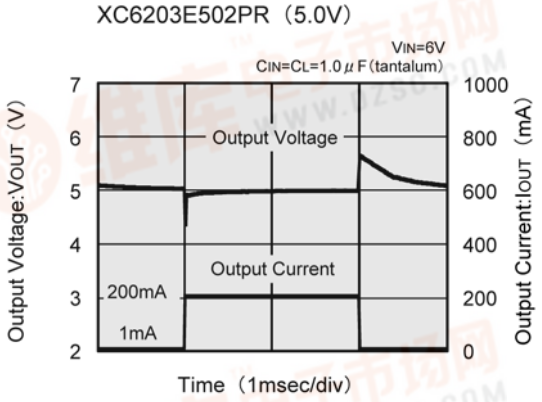

(9) Ripple Rejection Rate

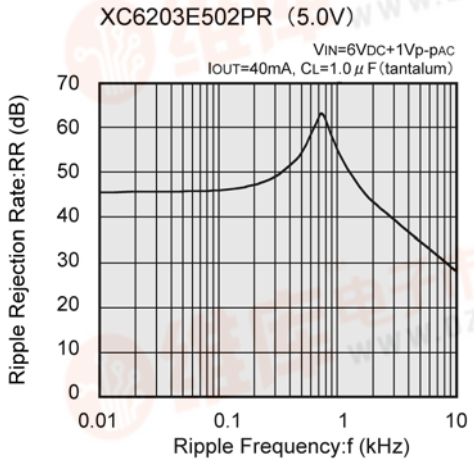

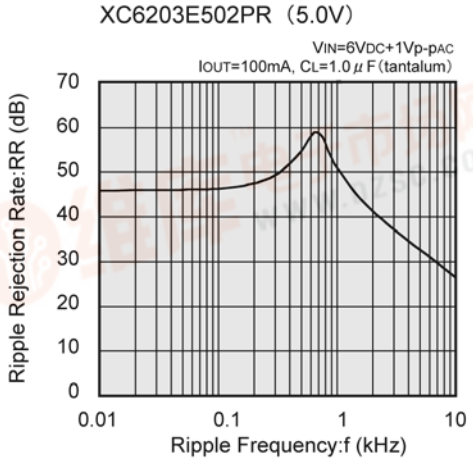

找PDF 维库一下 pdf.dzsc.com

查询XC6203供应商

■TYPICAL PERFORMANCE CHARACTERISTICS (Continued)

●XC6203E502PR (Continued)

(10) Output Voltage vs. Output Current

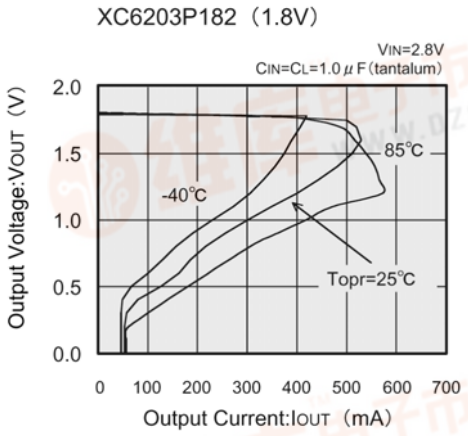

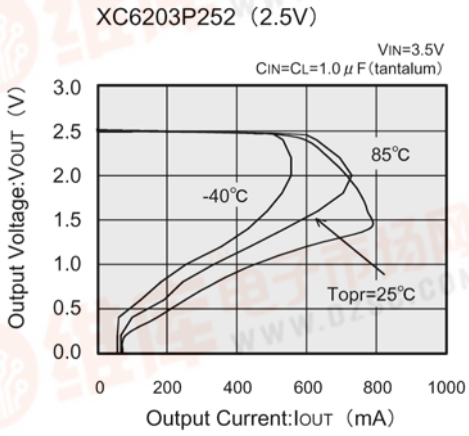

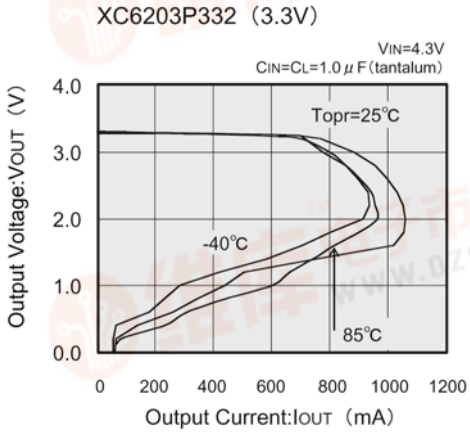

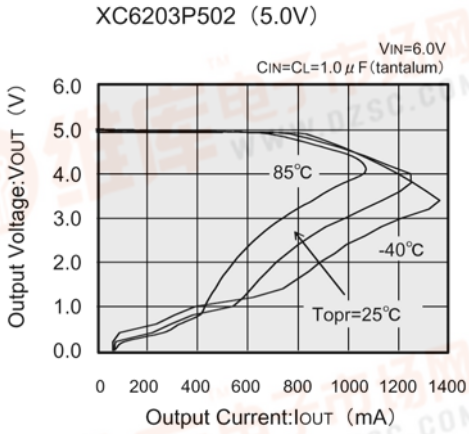

pdf.dzsc.com

查询XC6203供应商

■PACKAGING INFORMATION

●SOT-89

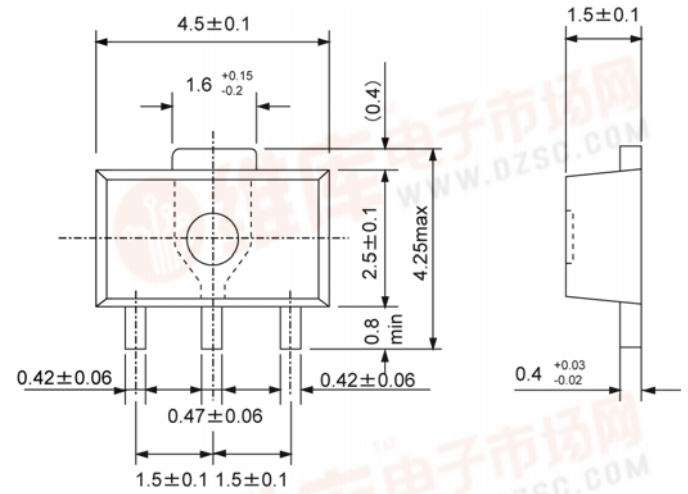

●SOT-23

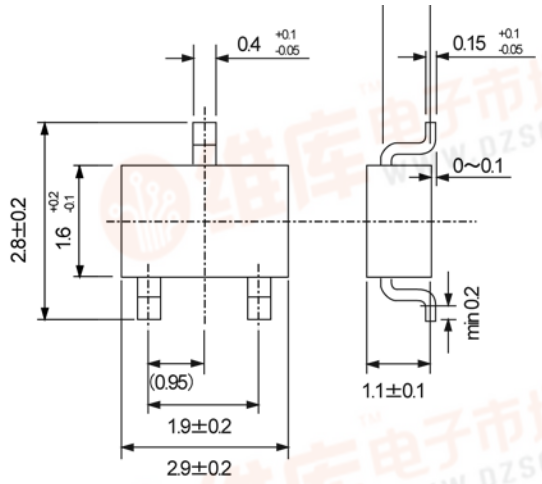

找PDF 维库一下 pdf.dzsc.com

查询XC6203供应商

■PACKAGING INFORMATION (Continued)

●SOT-223

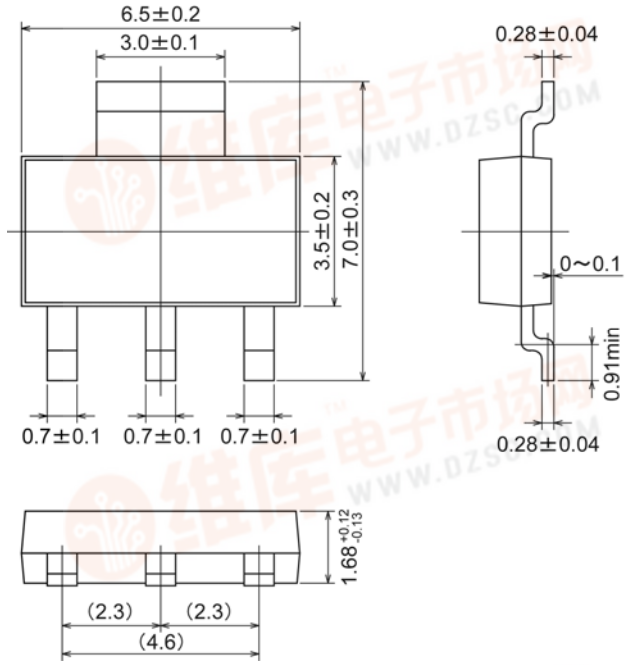

●TO-92

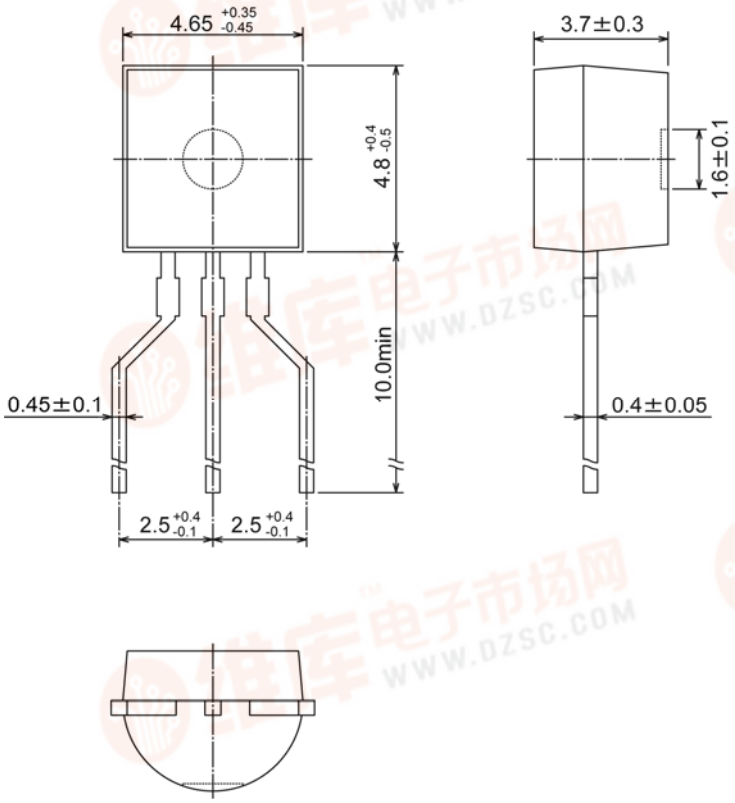

pdf.dzsc.com

查询XC6203供应商

■MARKING RULE

●SOT-23, SOT-89, SOT-223

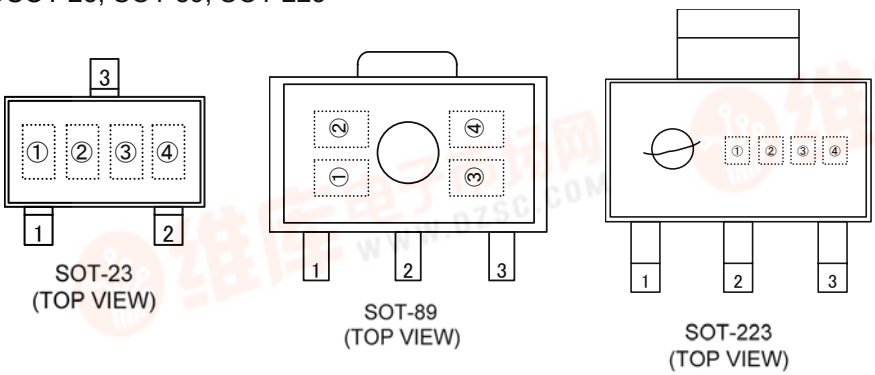

①Represents product series

MARK	PRODUCT SERIES
3	XC6203xxxxx

②Represents type of regulator

MARK			PRODUCT SERIES
VOLTAGE=0.1～3.0V	VOLTAGE=3.1～6.0V	VOLTAGE=2.85V	
5	6	7	XC6203Pxxxxx
2	3	4	XC6203Exxxxx

③Represents output voltage

MARK	OUTPUT VOLTAGE（V）			MARK	OUTPUT VOLTAGE（V）		
0	–	3.1	–	F	–	4.6	–
1	–	3.2	–	H	–	4.7	–
2	–	3.3	–	K	1.8	4.8	–
3	–	3.4	–	L	1.9	4.9	–
4	–	3.5	–	M	2.0	5.0	–
5	–	3.6	–	N	2.1	5.1	–
6	–	3.7	–	P	2.2	5.2	–
7	–	3.8	–	R	2.3	5.3	–
8	–	3.9	–	S	2.4	5.4	–
9	–	4.0	–	T	2.5	5.5	–
A	–	4.1	–	U	2.6	5.6	–
B	–	4.2	–	V	2.7	5.7	–
C	–	4.3	–	X	2.8	5.8	2.85
D	–	4.4	–	Y	2.9	5.9	–
E	–	4.5	–	Z	3.0	6.0	–

④Represents production lot number

0～9, A to Z or inverted characters of 0 to 9 and A to Z repeated (G, I, J, O, Q, W excepted)

找PDF 维库一下 pdf.dzsc.com

查询XC6203供应商

■MARKING RULE (Continued)

●TO-92

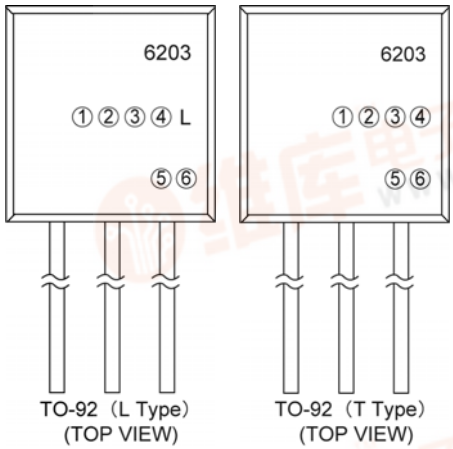

①Represents type of regulator

MARK	PRODUCT SERIES
P	XC6203Pxxxxx
E	XC6203Exxxxx

②③④Represents output voltage and voltage accuracy

MARK			VOLTAGE (V)	VOLTAGE ACCURACY (%)	PRODUCT SERIES
②	③	④			
3	3	2	3.3	±2	XC6203x332xx
5	0	1	5.0	±1	XC6203x501xx
2	8	A	2.85	±2	XC6203x28Axx

⑤Represents least significant digit of the production year

MARK	PRODUCTION SERIES
3	2003
4	2004

⑥Represents production lot number
0 to 9, A to Z repeated (G, I, J, O, Q, W excepted)
Note: No character inversion used

pdf.dzsc.com

查询XC6203供应商

1. The products and product specifications contained herein are subject to change without notice to improve performance characteristics. Consult us, or our representatives before use, to confirm that the information in this datasheet is up to date.
2. We assume no responsibility for any infringement of patents, patent rights, or other rights arising from the use of any information and circuitry in this datasheet.
3. Please ensure suitable shipping controls (including fail-safe designs and aging protection) are in force for equipment employing products listed in this datasheet.
4. The products in this datasheet are not developed, designed, or approved for use with such equipment whose failure of malfunction can be reasonably expected to directly endanger the life of, or cause significant injury to, the user.
   (e.g. Atomic energy; aerospace; transport; combustion and associated safety equipment thereof.)
5. Please use the products listed in this datasheet within the specified ranges.
   Should you wish to use the products under conditions exceeding the specifications, please consult us or our representatives.
6. We assume no responsibility for damage or loss due to abnormal use.
7. All rights reserved. No part of this datasheet may be copied or reproduced without the prior permission of TOREX SEMICONDUCTOR LTD.

TOREX SEMICONDUCTOR LTD.

找PDF 维库一下 pdf.dzsc.com