查询BGC420供应商 捷多邦，专业PCB打样工厂，24小时加急出货

Self-Biased BFP420

- SIEGET®25- Technology
- Small SCT598-Package
- Control Pin For Switching The Device Off
- Current Easy Adjustable By An External Resistor
- Voltage Independent Current (2V – 4.5V)

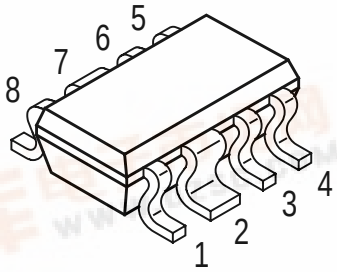

VPW05982

ESD: **E**lectro**s**tatic **d**ischarge sensitive device, observe handling precautions!

Type	Marking	Ordering Code (8-mm taped)	Pin Configuration (circuit Diagram)	Package
BGC420	**42s**	**Q62702-G0092**	see below	**SCT598**

Equivalent Circuit

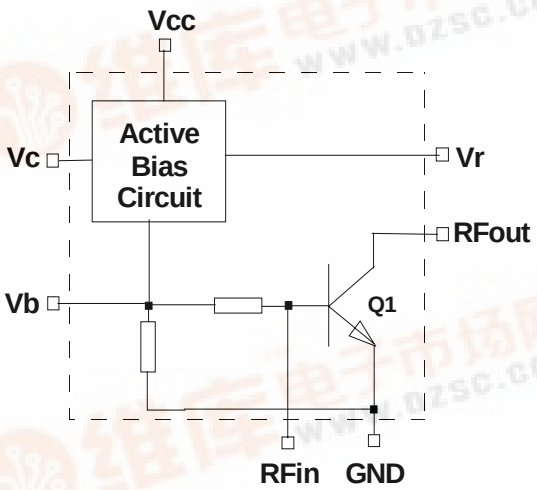

Pin Connections, SCT598

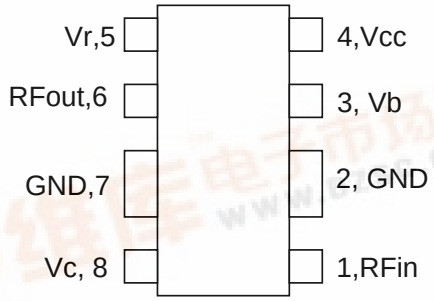

Note: Top View

Description

The BGC420 is a silicon self biased RF Transistor (Q1). It offers an adjustable collector current nearly independent from device voltage in the range from 2.0V to 4.5V. Additionally a control pin (Vc) for switching the device off is provided. The collector current can be adjusted by connecting a resistor (Rx) between Vcc and Vr.

找PDF 维库一下 pdf.dzsc.com

Maximum Ratings

Parameter	Symbol		Unit
Device current	I_{CC}	15	mA
Device voltage	Vcc	4.5	V
Total power dissipation, $T_S \leq$ 110°C [1)]	P_{tot}	68	mW
Control voltage	Vc	Vcc+0.5	V
Input Current for pin 1	Ir	380	µA
Junction temperature	T_j	150	°C
Ambient temperature range	T_A	-65...+150	°C
Storage temperature range	T_{stg}	-65...+150	°C

Thermal Resistance

Junction-soldering point [1)]	$R_{th\ JS}$	$\leq$ 270	K/W

1)T_S is measured on the Ground lead at the soldering point to the pcb.

Electrical Specifications (Measured in Test Fixture applying the circuit specified in Figure 1 with Rx=82Ω), Tc=25°C, Vcc=3V, I_{CC}≈7mA unless noted

Symbol	Parameter		Unit	Min	Typ	Max
Gp	Power Gain ($\|S_{21}\|^2$)	f=900MHz	dB	17.5	19	
		f=1.8GHz		14.5	16	
NF	Noise Figure (in 50Ω System)	f=900MHz	dB		1.3	1.5
		f=1.8GHz			1.5	1.7
P_{-1dB}	Output Power at 1dB Gain Compression	f=900MHz	dBm		1	
	(in 50Ω System)	f=1.8GHz			1	
IP_3	Third Order Intercept Point	f=900MHz	dBm		15	
	(Output,Γ_{Opt})	f=1.8GHz			15	
RL_{in}	Input Return Loss	f=900MHz	dB		7	
		f=1.8GHz			9	
RL_{out}	Output Return Loss	f=900MHz	dB		4	
		f=1.8GHz			7	
t_{on}	On Switching Time[3)]		µs		3.7	
t_{off}	Off Switching Time[3)]		µs		2.5	
I_{leak}	Leakage Current In Sleep Mode		µA		<10	
I_{VcOn}	Controll Pin (Vc) Current in Active Mode[2)]		µA		35	
I_{VcOff}	Controll Pin (Vc) Current in Sleep Mode[2)]		nA		-60	
V_{cmin}	Minimum Voltage at Vc for Sleep Mode		V		V_{cc} - 0.3V	
V_{cmax}	Maximum Voltage at Vc for Active Mode		V		0V+0.3V	

[2)] A positive sign denotes a current flowing form the Pin into the external circuit.

[3)] This values are valid for C2=1nF, C3=100pF and 220pF Coupling capacitors at RFin and RFout.

Power Gain
versus Frequency
Vcc=3V, Icc=5mA

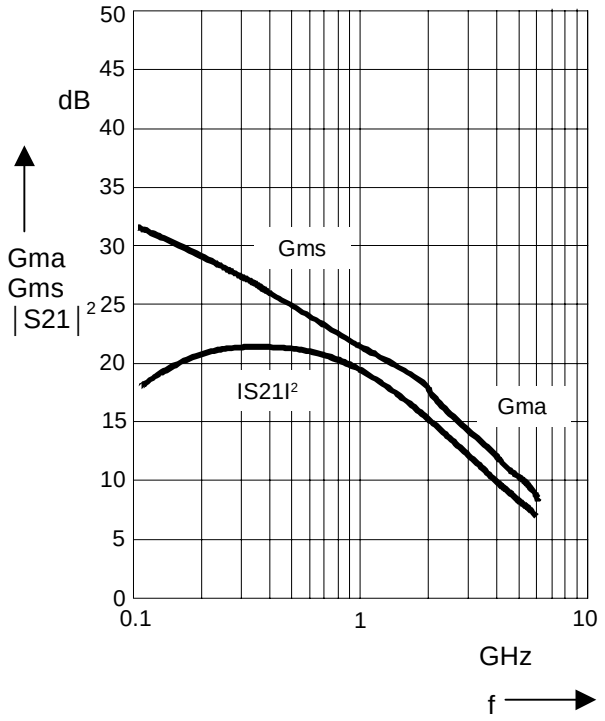

Power Gain
versus Device Current
Vcc=3V

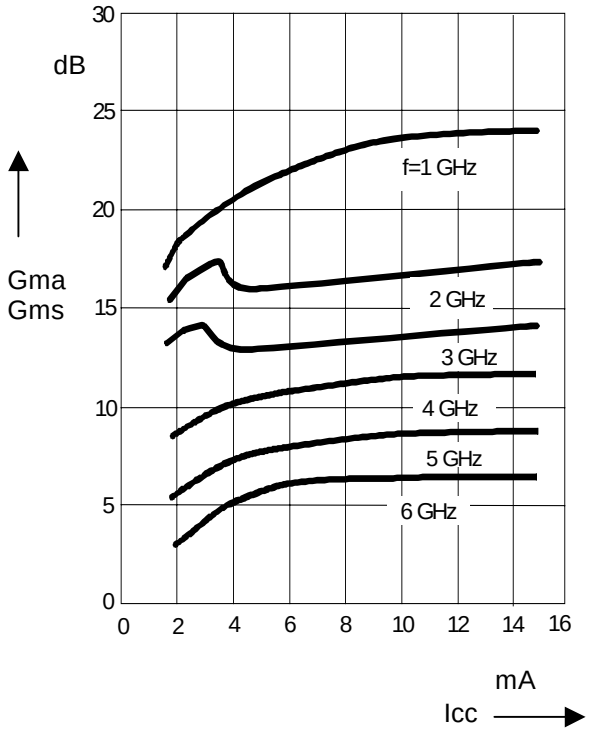

|S21|²
versus Frequency and Temperature
Vcc=3V, Icc=7mA

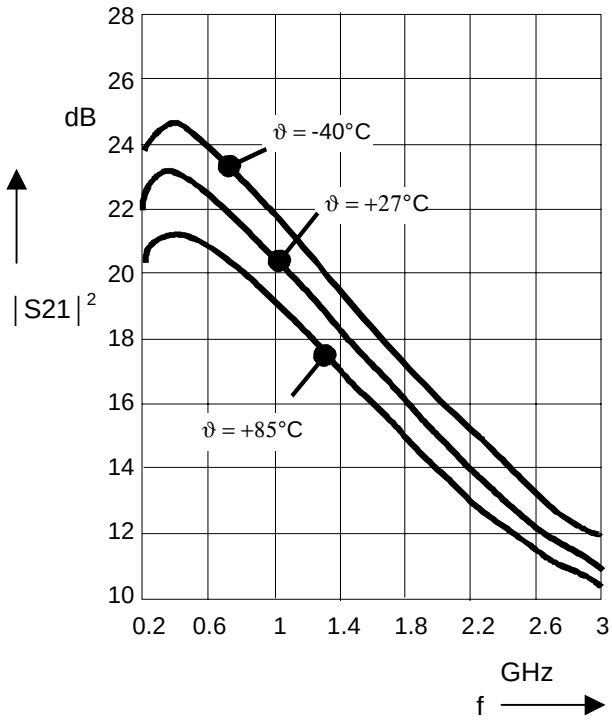

Device Current
versus Device Voltage

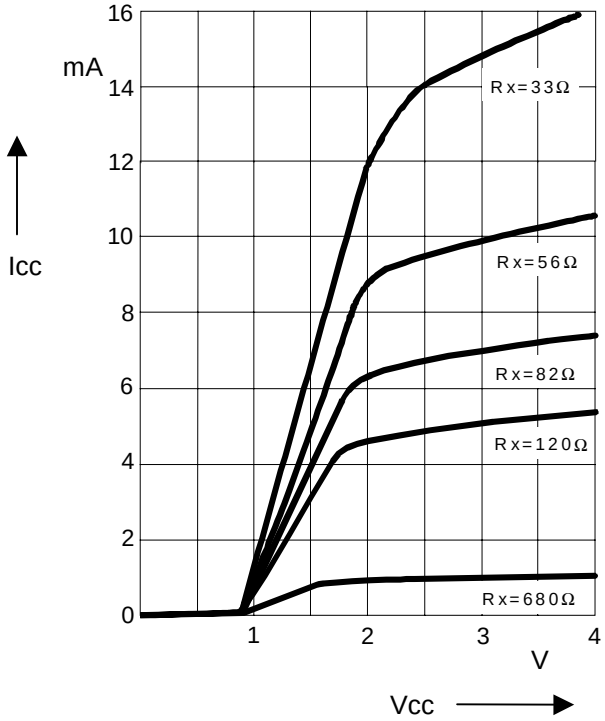

Device Current
versus Rx and Temperature
Vcc=3V

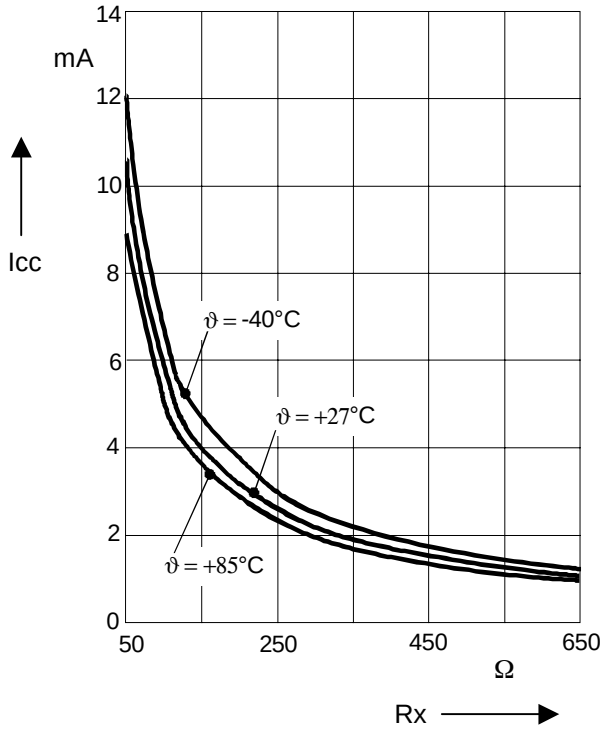

Device Current
versus Voltage at Vc
Vcc=3V; Rx=82Ω

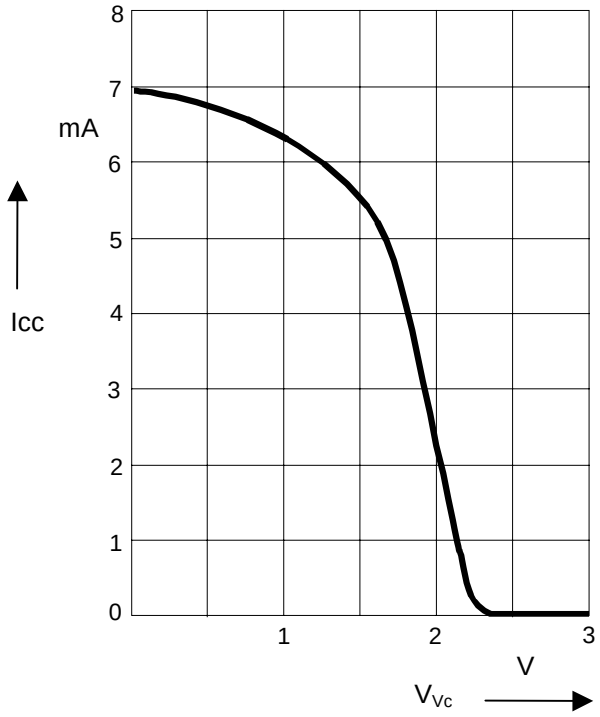

Typical Application

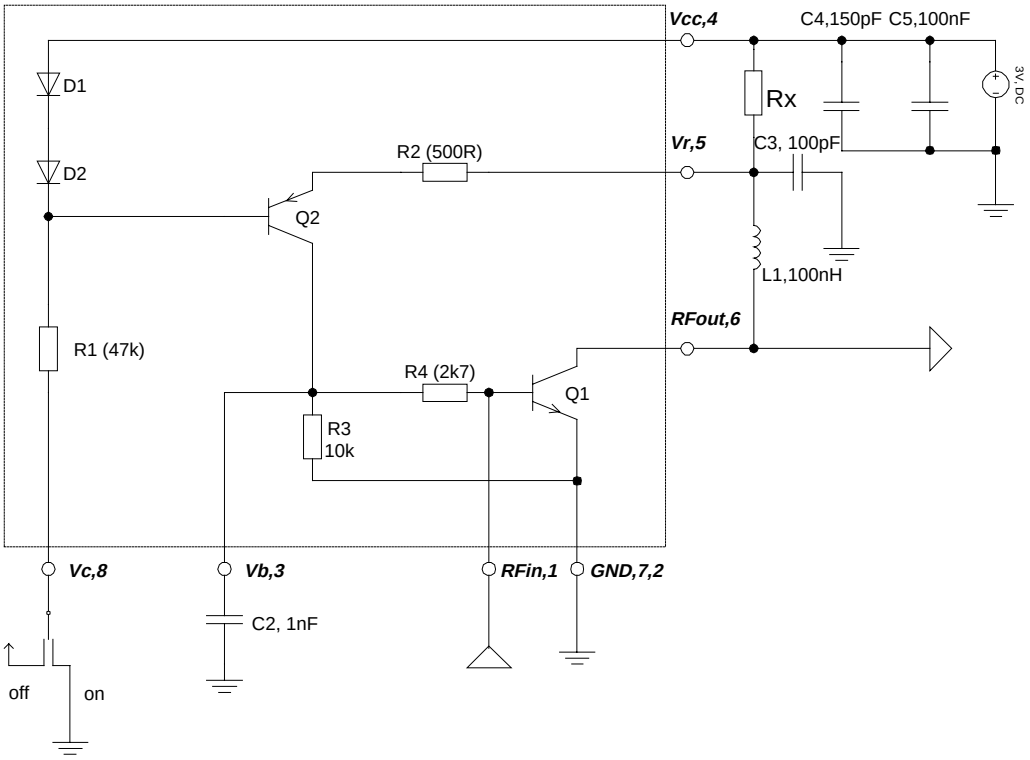

Figure 1. Typical Application and Internal Circuit

Remarks:

1) To provide low frequency stability C2 should be 10 times C3.
2) Be aware that also coupling capacitors determine the switching times.
3) The collector current at Q1 can be estimated by Ic=0.6V / Rx[Ω].
4) Place C2 as close to the device as possible.

Layout Proposal

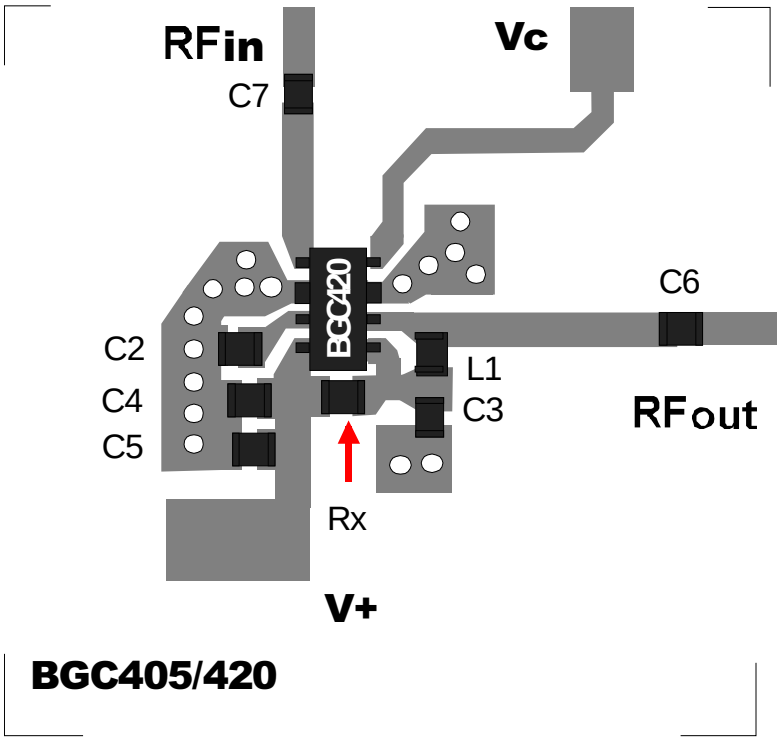

Figure 2. Layout Proposal

Part List for Vcc=3V, I_{CC}≈7mA

Component	Value	Comment
L1	100nH	RFC
C2	1nF	Compensation Capacitor for Low Frequency Stabilization
C3	100pF	RFC
C4	150pF	Blocking Capacitor
C5	100nF	Blocking Capacitor
C6	220pF	Coupling Capacitor
C7	220pF	Coupling Capacitor
Rx	82Ω	Current Adjust
Substrate	h=0.5mm	Fr4,ε_r=4.5
BGC420		

This proposal demonstrates how to use the BGC420 as a *Self-Biased Transistor*. As for a discrete Transistor matching circuits have to be applied. A good starting point for various applications are the Application Notes provided for the BFP420.

SPICE Model

The following SPICE Listing describes the circuit shown in figure 3. It is valid for low frequencies. For frequencies above 100MHz the parasitic circuit elements noted in figure 4 and table 1 should be added.

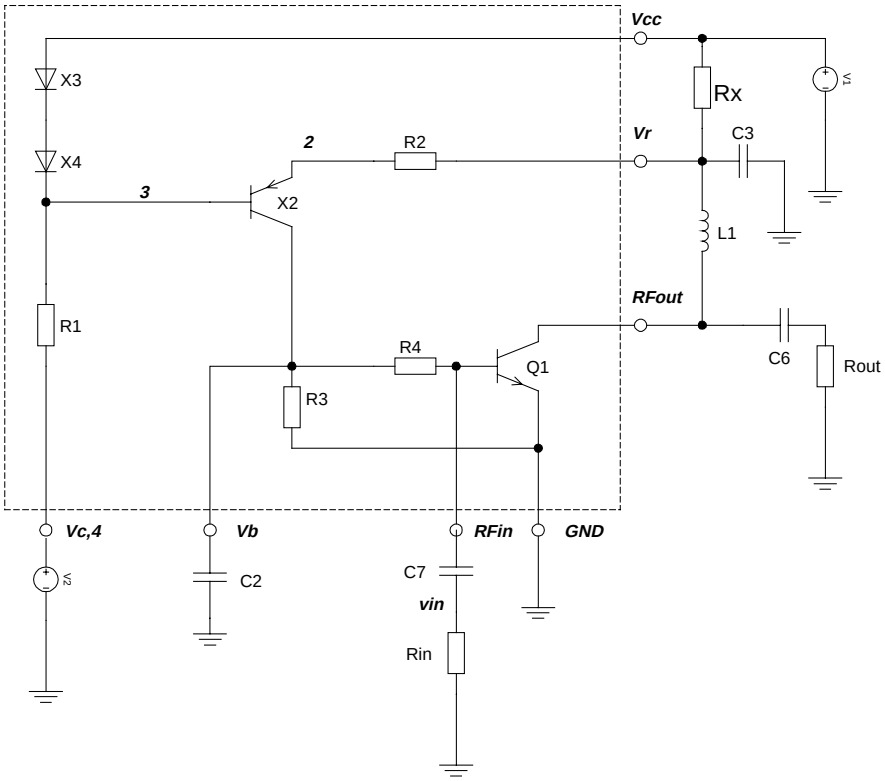

Figure. 3: Circuit used in the SPICE File

```
* Preliminary SPICE Model for BGC420 (valid for frequencies below 100MHz)
* SIEMENS HIGH FREQUENCY PRODUCTS
*   Small Scale MMIC Design Group

.PARAM R=82

** Analysis setup **
*.TRAN 2ns 15u 0 2n
.TEMP +27
.DC LIN V1 0V 4V 0.1V
*.DC LIN V2 0V 3V 0.1V
.STEP PARAM R LIST 56 82 120 680

* Voltage supply
V1    Vcc 0       DC 3.0V
V2    Vc  0       DC 0.0V
*Vpul Vc  0       PULSE(0 3V 100ns 0 0 9us 1000m)
```

```
* Internal Resistors
R1    3 Vc        47k   TC=-0.0006,0.0000025
R2    Vr 2        500   TC=-0.0006,0.0
R3    Vb 0        10k   TC=-0.0006,0.0000025
R4    Vb rfin     2.7k  TC=-0.0006,0.0

* External Resistors
Rx    Vcc Vr      {R}   TC=+0.000050,0.0
Rout  vout 0      50
Rin   vin 0       50


* External Capacitors

C2    Vb 0        1nF
C3    Vr 0        100pF
C7    rfin vin    220pF
C6    rfout vout  220pF

* Inductors (external)

L1    Vr rfout    100nH


* Transistors
Q1    rfout rfin 0      BFP420
X2    2 3 Vb 0          8PL18
X3    Vcc 5 5 0         2PL18
X4    5 3 3 0           2PL18

.PROBE

.MODEL BFP420 NPN(
+ IS = 2.0045e-16     BF = 72.534      NF = 1.2432
+ VAF = 28.383        IKF = 0.48731     ISE = 1.9049e-14
+ NE = 2.0518         BR = 7.8287       NR = 1.3325
+ VAR = 19.705        IKR = 0.69141     ISC = 1.9237e-17
+ NC = 1.1724         RB = 3.4849       IRB = 0.00072983
+ RBM = 8.5757        RE = 0.31111      RC = 0.10105
+ CJE = 1.8063e-15    VJE = 0.8051      MJE = 0.46576
+ TF = 6.7661e-12     XTF = 0.42199     VTF = 0.23794
+ ITF = 0.001         PTF = 0           CJC = 2.3453e-13
+ VJC = 0.81969       MJC = 0.30232     XCJC = 0.3
+ TR = 2.3249e-09     CJS= 0            VJS = 0.75
+ MJS = 0             XTB = 0           EG = 1.11
+ XTI = 3             FC = 0.73234)


* PNP:  PL18 E B C Bulk

.SUBCKT  8PL18  3  2  1  94
Q1    993    2   3     94    TL18 8
Q2    94     2   3     94   VSL18 8
Q3    94     2   993   94   LSL18 8
RCEX  993    1              0.204
.ENDS

.SUBCKT  2PL18  3  2  1  94
Q1    993    2   3     94    TL18 2
Q2    94     2   3     94   VSL18 2
Q3    94     2   993   94   LSL18 2
RCEX  993    1              0.816
.ENDS
```

```
*****
.MODEL      TL18        PNP
+IS       = 2.914E-17   NF       = 1.000E+00   BF       = 4.005E+02
+NE       = 1.553E+00   ISE      = 6.923E-16   NR       = 1.000E+00
+BR       = 2.869E+01   NC       = 1.500E+00   ISC      = 8.190E-15
+VAF      = 6.000E+01   IKF      = 1.676E-04   VAR      = 2.214E+00
+IKR      = 2.474E-05   RB       = 6.000E+01   IRB      = 0.000E+00
+RBM      = 4.000E+01   RE       = 2.597E+00   RC       = 4.000E+00
+XTB      =-6.000E-01   EG       = 1.156E+00   XTI      = 3.000E+00
+CJE      = 1.200E-14   VJE      = 4.900E-01   MJE      = 1.360E-01
+TF       = 7.600E-10   XTF      = 2.872E-01   VTF      = 1.000E+03
+ITF      = 1.400E-02   CJC      = 4.700E-13   VJC      = 7.610E-01
+MJC      = 3.760E-01   XCJC     = 1.000E+00   TR       = 0.000E+00
+CJS      = 0.000E+00   VJS      = 7.500E-01   MJS      = 0.000E+00
+PTF      = 0.000E+00   FC       = 5.000E-01

*****
.MODEL      VSL18       PNP
+IS       = 1.630E-19   NF       = 1.000E+00   BF       = 1.000E+09
+NE       = 1.500E+00   ISE      = 0.000E+00   NR       = 1.000E+00
+BR       = 1.000E+09   NC       = 2.000E+00   ISC      = 0.000E+00
+VAF      = 1.000E+02   IKF      = 1.794E-04   VAR      = 1.700E+00
+IKR      = 1.000E+00   RB       = 0.000E+00   IRB      = 0.000E+00
+RBM      = 0.000E+00   RE       = 0.000E+00   RC       = 0.000E+00
+XTB      = 0.000E+00   EG       = 1.122E+00   XTI      = 3.000E+00
+CJE      = 0.000E+00   VJE      = 6.800E-01   MJE      = 3.400E-01
+TF       = 2.000E-09   XTF      = 0.000E+00   VTF      = 1.000E+03
+ITF      = 1.000E+06   CJC      = 1.950E-13   VJC      = 5.500E-01
+MJC      = 3.770E-01   XCJC     = 0.000E+00   TR       = 0.000E+00
+CJS      = 0.000E+00   VJS      = 7.500E-01   MJS      = 0.000E+00
+PTF      = 0.000E+00   FC       = 5.000E-01

*****
.MODEL      LSL18       PNP
+IS       = 4.261E-17   NF       = 1.000E+00   BF       = 1.000E+09
+NE       = 1.500E+00   ISE      = 0.000E+00   NR       = 1.000E+00
+BR       = 1.000E+09   NC       = 2.000E+00   ISC      = 0.000E+00
+VAF      = 6.000E+01   IKF      = 9.648E-05   VAR      = 1.700E+00
+IKR      = 1.000E+00   RB       = 0.000E+00   IRB      = 0.000E+00
+RBM      = 0.000E+00   RE       = 0.000E+00   RC       = 0.000E+00
+XTB      = 0.000E+00   EG       = 1.158E+00   XTI      = 3.000E+00
+CJE      = 0.000E+00   VJE      = 6.800E-01   MJE      = 3.400E-01
+TF       = 1.000E-09   XTF      = 0.000E+00   VTF      = 1.000E+03
+ITF      = 1.000E+06   CJC      = 0.000E+00   VJC      = 4.600E-01
+MJC      = 3.000E-01   XCJC     = 0.000E+00   TR       = 0.000E+00
+CJS      = 0.000E+00   VJS      = 7.500E-01   MJS      = 0.000E+00
+PTF      = 0.000E+00   FC       = 5.000E-01
*****


.END
```

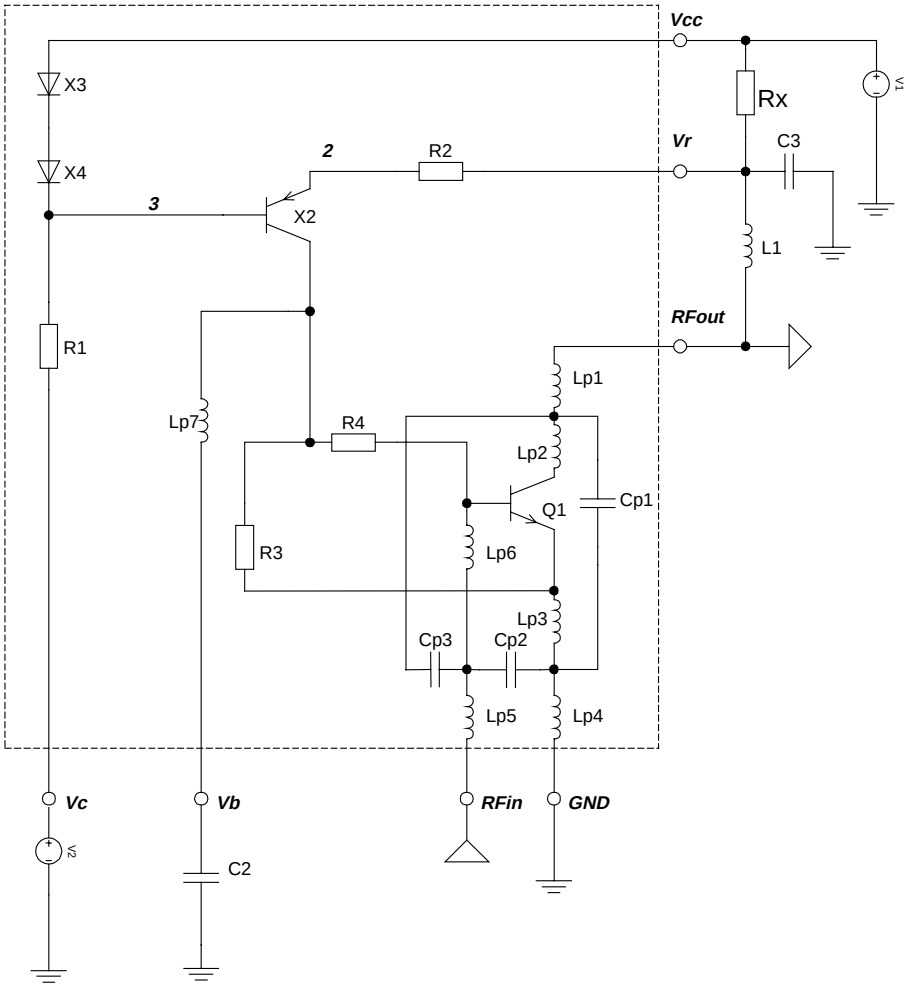

Figure 4. Parasitic circuit elements for frequencies above 100MHz

Element	Value
Lp1	0.58nH
Lp2	0.56nH
Lp3	0.23nH
Lp4	0.05nH
Lp5	0.53nH
Lp6	0.47nH
Lp7	1nH
Cp1	134fF
Cp2	136fF
Cp3	6.9fF

Table 1. Parasitic circuit elements for frequencies above 100MHz

Package

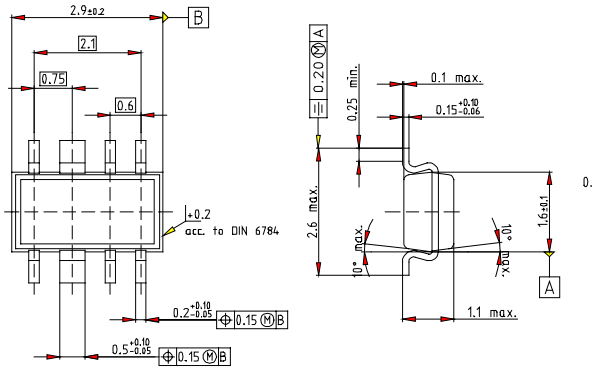

Published by
Infineon Technologies AG i Gr.,
Bereichs Kommunikation
St.-Martin-Strasse 76,
D-81541 München
© Infineon Technologies AG 1999
All Rights Reserved.

Attention please!

The information herein is given to describe certain components and shall not be considered as warranted characteristics.
Terms of delivery and rights to technical change reserved.
We hereby disclaim any and all warranties, including but not limited to warranties of non-infringement, regarding circuits, descriptions and charts stated herein.
Infineon Technologies is an approved CECC manufacturer.

Information

For further information on technology, delivery terms and conditions and prices please contact your nearest Infineon Technologies Office in Germany or our Infineon Technologies Representatives worldwide (see address list).

Warnings

Due to technical requirements components may contain dangerous substances. For information on the types in question please contact your nearest Infineon Technologies Office.
Infineon Technologies Components may only be used in life-support devices or systems with the express written approval of Infineon Technologies, if a failure of such components can reasonably be expected to cause the failure of that life-support device or system, or to affect the safety or effectiveness of that device or system. Life support devices or systems are intended to be implanted in the human body, or to support and/or maintain and sustain and/or protect human life. If they fail, it is reasonable to assume that the health of the user or other persons may be endangered.