查询TPS40090供应商 捷多邦，专业PCB打样工厂，24小时加急出货

TEXAS INSTRUMENTS

TPS40090
TPS40091

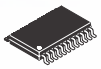

SLUS578A − OCTOBER 2003 − REVISED JUNE 2004

HIGH-FREQUENCY, MULTIPHASE CONTROLLER

FEATURES

- Two-, Three-, or Four-Phase Operation
- 5-V to 15-V Operating Range
- Programmable Switching Frequency Up to 1-MHz/Phase
- Current Mode Control With Forced Current Sharing(1)
- 1% Internal 0.7-V Reference
- Resistive Divider Set Output Voltage
- True Remote Sensing Differential Amplifier
- Resistive or DCR Current Sensing
- Current Sense Fault Protection
- Programmable Load Line
- Compatible with UCC37222 Predictive Gate Drive™ Technology Drivers
- 24-Pin Space-Saving TSSOP Package
- TPS40090: Binary Output
  TPS40091: Tri−State Output

APPLICATIONS

- Internet Servers
- Network Equipment
- Telecommunications Equipment
- DC Power Distributed Systems

PW PACKAGE
(TOP VIEW)

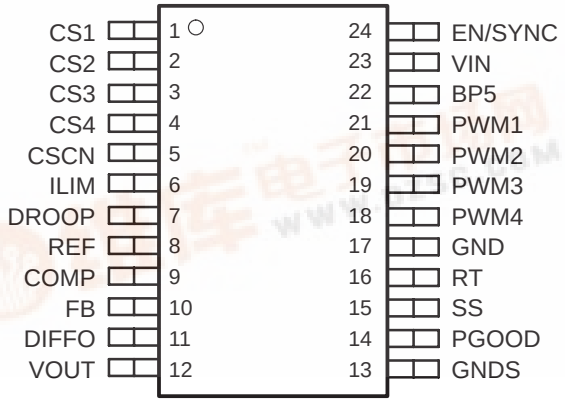

(1) Patent pending

Predictive Gate Drive is a trademark of Texas Instruments Incorporated.

DESCRIPTION

The TPS4009x family are two-, three-, or four-phase programmable synchronous buck controllers, optimized for low-voltage, high-current applications powered by a 5-V to 15-V distributed supply. A multi-phase converter offers several advantages over a single power stage including lower current ripple on the input and output capacitors, faster transient response to load steps, improved power handling capabilities, and higher system efficiency.

Each phase can be operated at a switching frequency up to 1-MHz, resulting in an effective ripple frequency of up to 4-MHz at the input and the output in a four-phase application. A two phase design operates 180 degrees out-of- phase, a three-phase design operates 120 degrees out of phase, and a four-phase design operates 90 degrees out of phase as shown in Figure 1.

The number of phases is programmed by con−necting the de-activated phase PWM output to the output of the internal 5-V LDO. In two-phase operation the even phase outputs should be de-activated.

The TPS4009x uses fixed frequency, peak current mode control with forced phase current balancing. When compared to voltage mode control, current mode results in a simplified feedback network and reduced input line sensitivity. Phase current is sensed by using either current sense resistors installed in series with output inductors or, for improved efficiency, by using the DCR (direct current resistance) of the filter inductors. The latter method involves generation of a current proportional signal with an R-C circuit (shown in Figure 10.

The R-C values are selected by matching the time constants of the R-C circuit and the inductor; R-C = L/DCR. With either current sense method, the current signal is amplified and superimposed on the amplified voltage error signal to provide current mode PWM control.

PRODUCTION DATA information is current as of publication date. Products conform to specifications per the terms of Texas Instruments standard warranty. Production processing does not necessarily include testing of all parameters.

Copyright © 1999 − 2003, Texas Instruments Incorporated

DESCRIPTION (continued)

An output voltage droop can be programmed to improve the transient window and reduce size of the output filter. Other features include a single voltage operation, a true differential sense amplifier, a programmable current limit, soft-start and a power good indicator.

SIMPLIFIED TWO-PHASE APPLICATION DIAGRAM

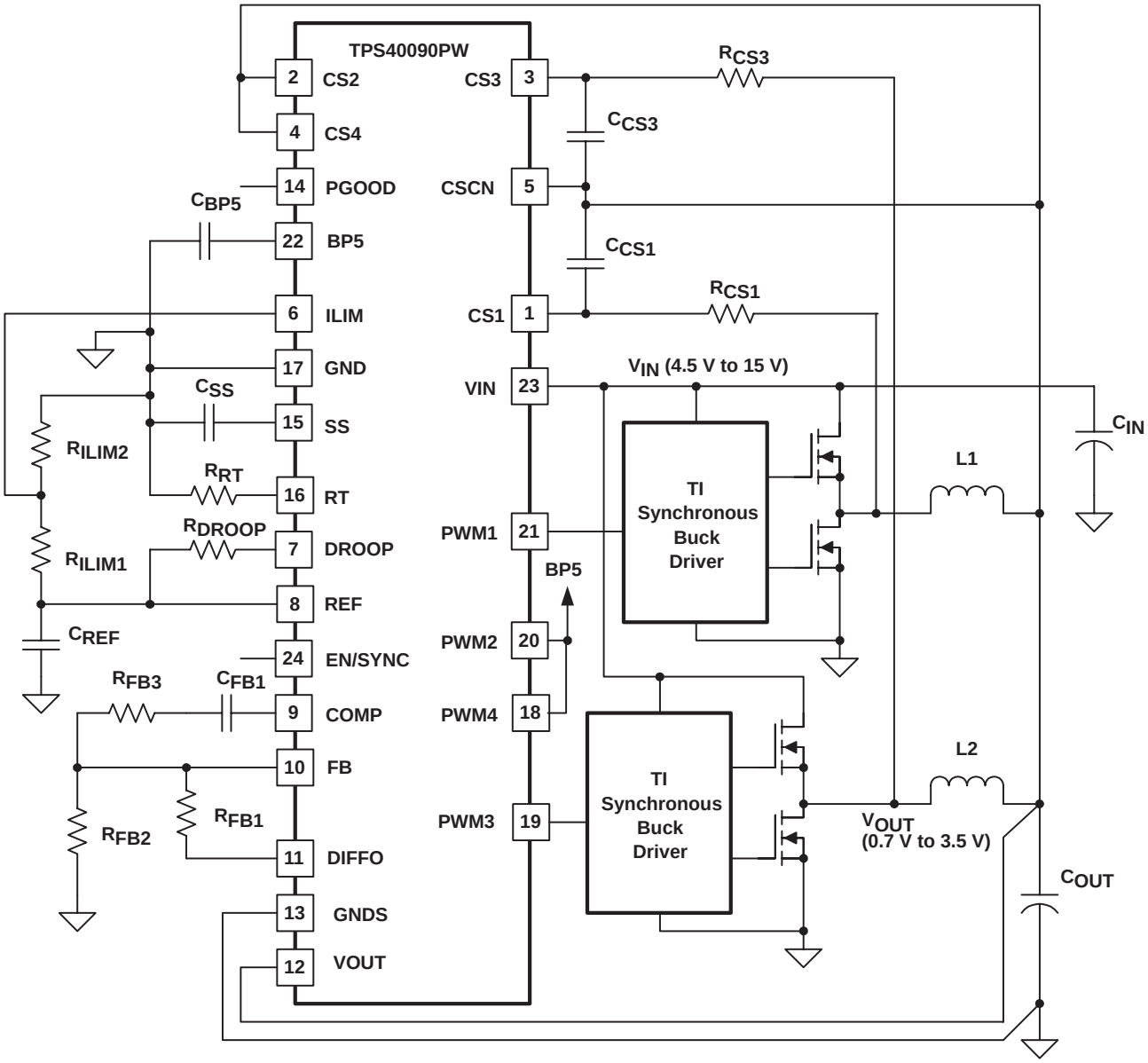

These devices have limited built-in ESD protection. The leads should be shorted together or the device placed in conductive foam during storage or handling to prevent electrostatic damage to the MOSFET gates.

ORDERING INFORMATION

T_A	PACKAGE	OUTPUT	PART NUMBER
−40°C to 85°C	Plastic TSSOP(PW)(1)	Binary	TPS40090PW
		Tri−state	TPS40091PW

(1) The PW package is also available taped and reeled. Add an R suffix to the device type (i.e., TPS40090PWR).

ABSOLUTE MAXIMUM RATINGS

over operating free-air temperature range unless otherwise noted(2)

		TPS40090 TPS40091	UNIT
Input voltage range, V_{IN}	EN/SYNC, VIN,	16.5	V
	CS1, CS2, CS3, CS4, CSCN, DROOP, FB, GNDS, ILIM, VOUT	−0.3 to 6.0	
Output voltage range, V_{OUT}	REF, COMP, DIFFO, PGOOD, SS, RT, PWM1, PWM2, PWM3, PWM4, BP5	−0.3 to 6.0	
Operating junction temperature range, T_J		−40 to 125	°C
Storage temperature, T_{stg}		−55 to 150	
Lead temperature 1,6 mm (1/16 inch) from case for 10 seconds		260	

(2) Stresses beyond those listed under “absolute maximum ratings” may cause permanent damage to the device. These are stress ratings only, and functional operation of the device at these or any other conditions beyond those indicated under “recommended operating conditions” is not implied. Exposure to absolute-maximum-rated conditions for extended periods may affect device reliability.

RECOMMENDED OPERATING CONDITIONS

	MIN	NOM	MAX	UNIT
Input voltage, V_{IN}	4.5		15	V
Operating free-air temperature, T_A	−40		85	°C

ELECTRICAL CHARACTERISTICS

T_A = −40°C to 85°C, V_{IN} = 12 V, R_{RT} = 64.9 kΩ, $T_J = T_A$ (unless otherwise noted)

PARAMETER		TEST CONDITIONS	MIN	TYP	MAX	UNIT
INPUT SUPPLY						
V_{IN}	Operating voltage range, VIN		4.5		15	V
V_{IN}	UVLO,	Rising V_{IN}	4.25		4.45	V
V_{IN}	UVLO(1)	Falling V_{IN}	4.1		4.35	V
I_{IN}	Shutdown current, VIN			2	10	µA
I_{IN}	Quiescent current switching	Four channels, 400 kHz each, no load		4.0	6.0	mA
OSCILLATOR/SYNCHRONIZATION						
	Phase frequency accuracy	Four channels, R_{RT} = 64.9 kΩ	370	415	455	kHz
	Phase frequency set range(1)	Four channels	100		1200	kHz
	Synchronization frequency range(1)	Four channels	800		9600	kHz
	Synchronization input threshold(1)	Four channels		$V_{BP5}/2$		V
PWM						
	Maximum duty cycle per channel	4-phase operation		87.5%		
		2- and 3-phase operation		83.3%		
	Minimum duty cycle per channel(1)				0	
	Minimum controllable on-time(1)			50	100	ns
ERROR AMPLIFIER						
	Feedback input voltage		0.693	0.700	0.707	V
	Feedback input bias current	V_{FB} = 0.7 V		25	150	nA
V_{OH}	High-level output voltage	I_{COMP} = −1 mA	2.5	2.9		V
V_{OL}	low-level output voltage	I_{COMP} = 1 mA		0.5	0.8	V
G_{BW}	Gain bandwidth(1)			5		MHz
A_{VOL}	Open loop gain(1)			90		dB
SOFT START						
I_{SS}	Soft-start source current		3.5	5.0	6.0	µA
V_{SS}	Soft-start clamp voltage		0.95	1.00	1.05	V
ENABLE						
	Enable threshold voltage		0.8	2.0	2.5	V
	Enable voltage capability(1)				$V_{IN(max)}$	V
PWM OUTPUT						
	PWM pull-up resistance	I_{OH} = 5 mA		27	45	Ω
	PWM pull-down resistance	I_{OL} = 10 mA		27	45	Ω
	PWM output leakage(1)(2)	Three-state			1	µA
5V REGULATOR						
V_{BP5}	Output voltage	External I_{LOAD} = 2 mA	4.8	5.0	5.2	V
	Pass device voltage drop	V_{IN} = 4.5 V, no external load on BP5			200	mV
	Short circuit current		10		30	mA

(1) Ensured by design. Not production tested.
(2) TPS40091 only.

ELECTRICAL CHARACTERISTICS

T_A = −40°C to 85°C, V_{IN} = 12 V, R_{RT} = 64.9 kΩ, T_J = T_A (unless otherwise noted)

PARAMETER		TEST CONDITIONS	MIN	TYP	MAX	UNIT
CURRENT SENSE AMPLIFIER						
	Gain transfer	−100 mV ≤ V_{CS} ≤ 100 mV, V_{CSRTN} = 1.5 V	4.9	5.4	5.9	V/V
	Gain variance between phases	V_{CS} = 100 mV	−4%		4%	
	Input offset variance at zero current	V_{CS} = 0 V	−3.5	0	3.5	mV
	Input common mode(1)		0		4	V
	Bandwidth(1)		18			MHz
DIFFERENTIAL AMPLIFIER						
	Gain			1		V/V
	Gain tolerance	V_{OUT} 4.0 V vs. 0.7 V, V_{GNDS} = 0 V	−0.5%		0.5%	
CMRR	Common mode rejection ratio(1)	0.7 V ≤ V_{OUT} ≤ 4.0 V	60			dB
	Bandwidth(1)		5			MHz
RAMP						
	Ramp amplitude(1)		0.4	0.5	0.6	V
POWER GOOD						
	PGOOD high threshold	wrt VREF	10%		14%	
	PGOOD low threshold	wrt VREF	−14%		−10%	
V_{OL}	Low-level output voltage	I_{PGOOD} = 4 mA		0.35	0.60	V
I_{LEAK}	PGOOD output leakage	V_{PGOOD} = 5.0 V		50	80	µA
OUTPUT OVERVOLTAGE/UNDERVOLTAGE FAULT						
V_{OV}	Overvoltage threshold voltage	V_{FBK} relative to V_{REF}	15%		19%	
V_{UV}	Undervoltage threshold voltage	V_{FBK} relative to V_{REF}	−18%		−14%	
LOAD LINE PROGRAMMING						
I_{DROOP}	Pull-down current on DROOP	4-phase, V_{CS} = 100 mV		40		µA

(1) Ensured by design. Not production tested.

TERMINAL FUNCTIONS

TERMINAL NAME	TERMINAL NO.	I/O	DESCRIPTION
BP5	22	O	Output of an internal 5V regulator. A 4.7-µF capacitor should be connected from this pin to ground. For 5V applications this pin should be connected to VDD.
COMP	9	O	Output of the error amplifier. The voltage at this pin determines the duty cycle for the PWM.
CS1	1	I	Used to sense the inductor current in the phases. Inductor current can be sensed with an external current sense resistor or by using an external circuit and the inductor's DC resistance. They are also used for overcurrent protection and forced current sharing between the phases.
CS2	2	I	
CS3	3	I	
CS4	4	I	
CSCN	5	I	Common point of current sense resistors or filter inductors
DIFFO	11	O	Output of the differential amplifier. The voltage at this pin represents the true output voltage without drops that result from high current in the PCB traces
DROOP	7	I	Used to program droop function. A resistor between this pin and the REF pin sets the desired droop value.
EN/SYNC	24	I	A logic high signal on this input enables the controller operation. A pulsing signal to this pin synchronizes the main oscillator to the rising edge of an external clock source. These pulses must be of higher frequency than the free running frequency of the main oscillator set by the resistor from the RT pin.
FB	10	I	Inverting input of the error amplifier. In closed loop operation, the voltage at this pin is the internal reference level of 700 mV. This pin is also used for the PGOOD and OVP comparators.
GND	17	−	Ground connection to the device.
GNDS	13	I	Inverting input of the differential amplifier. This pin should be connected to ground at the point of load.
ILIM	6	I	Used to set the cycle-by-cycle current limit threshold. If ILIM threshold is reached, the PWM cycle is terminated and the converter delivers limited current to the output. Under these conditions the undervoltage threshold is reached eventually and the controller enters the hiccup mode. The controller stays in hiccup mode for seven consecutive cycles. At the eighth cycle the controller attempts a full start-up sequence.
PGOOD	14	O	Power good indicator of the output voltage. This open-drain output connects to the supply via an external resistor.
PWM1	21	O	Phase shifted PWM outputs which control the external drivers. The high output signal commands a PWM cycle. The low output signal commands controlled conduction of the synchronous rectifiers. These pins are also used to program various operating modes as follows: for three-phase mode, PWM4 is connected to 5 V; for two-phase mode, PWM2 and PWM4 are connected to 5 V.
PWM2	20	O	
PWM3	19	O	
PWM4	18	O	
REF	8	O	Output of an internal 0.7-V reference voltage.
RT	16	I	Connecting a resistor from this pin to ground sets the oscillator frequency.
VIN	23	I	Power input for the chip. De-coupling of this pin is required.
VOUT	12	I	Non-inverting input of the differential amplifier. This pin should be connected to VOUT at the point of load.

FUNCTIONAL BLOCK DIAGRAM

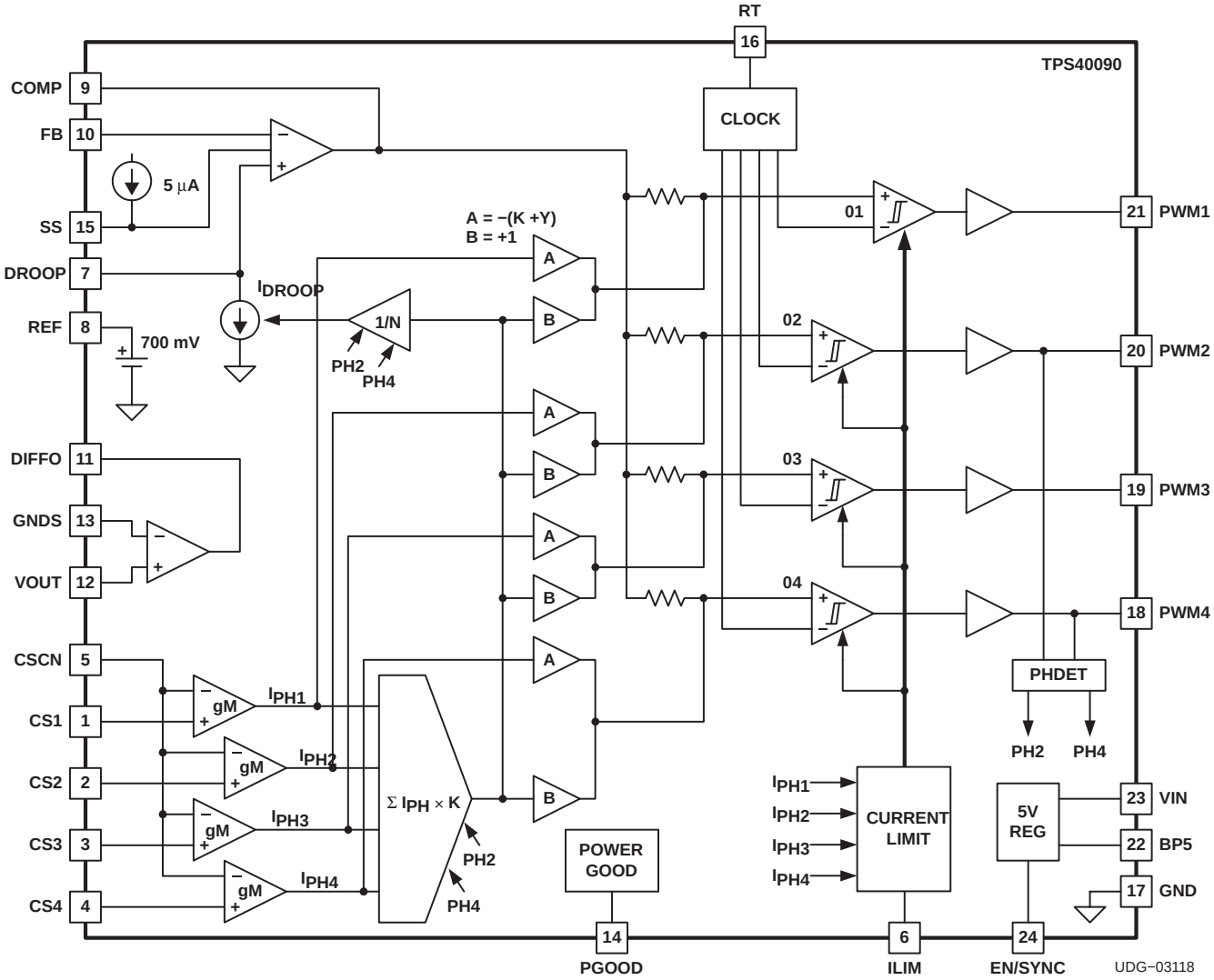

APPLICATION INFORMATION

FUNCTIONAL DESCRIPTION

The TPS4009x is a multiphase, synchronous, peak current mode, buck controller. The controller uses external gate drivers to operate N-channel power MOSFETs. The controller can be configured to operate in a two-, three-, or four-phase power supply.

The controller accepts current feedback signals from either current sense resistors placed in series with the filter inductors or current proportional signals derived from the inductors' DCR.

Other features include an LDO regulator with UVLO to provide single voltage operation, a differential input amplifier for precise output regulation, user programmable operation frequency for design flexibility, external synchronization capability, programmable pulse-by-pulse overcurrent protection, output overvoltage protection, and output undervoltage shutdown.

DIFFERENTIAL AMPLIFIER

The unity gain differential amplifier with high bandwidth allows improved regulation at a user-defined point and eases layout constraints. The output voltage is sensed between the VOUT and GNDS pins. The output voltage programming divider is connected to the output of the amplifier (DIFFO). The differential amplifier can be used only for output voltages lower then 3.3 V.

If there is no need for a differential amplifer, or if the output voltage required is higher than 3.3-V, the differential amplifier can be disabled by connecting the GNDS pin to the BP5 pin. The voltage programming divider in this case shoudl be connected directly to the output of the converter.

CURRENT SENSING AND BALANCING

The controller employs a peak current-mode control scheme, which naturally provides a certain degree of current balancing. With current mode, the level of current feedback should comply with certain guidelines depending on duty factor, known as *slope compensation* to avoid sub-harmonic instability. This requirement can prohibit achieving a higher degree of phase current balance. To avoid the controversy, a separate current loop that forces phase currents to match is added to the proprietary control scheme. This effectively provides high degree of current sharing independently of properties of controller's small signal response.

High-bandwidth current amplifiers can accept as an input voltage either voltage drop across dedicated precise current-sense resistors, or inductor's DCR voltage derived by an R-C network, or thermally compensated voltage derived from the inductor's DCR. The wide range of current-sense settings eases the cost and complexity constraints and provides performance superior to those found in controllers using low-side MOSFET current sensing.

APPLICATION INFORMATION

SETTING CONTROLLER CONFIGURATION

By default, the controller operates at four-phase configuration. The alternate number of active phases is programmed by connecting unused PWM outputs to BP5. (See Figure 1) For example, for three-phase operation, the unused fourth phase output, PWM4, should be connected to BP5. For two-phase operation, the second, PWM2, and the fourth, PWM4, outputs should be connected to BP5.

POWER UP

Capacitors connected to the BP5 pin and the soft-start pin set the power-up time. When EN is high, the capacitor connected to the BP5 pin gets charged by the internal LDO as shown in Figure 2.

$$t_{BPS} = \frac{4.5 \times C_{BP5}}{8 \times 10^{-3}} \tag{1}$$

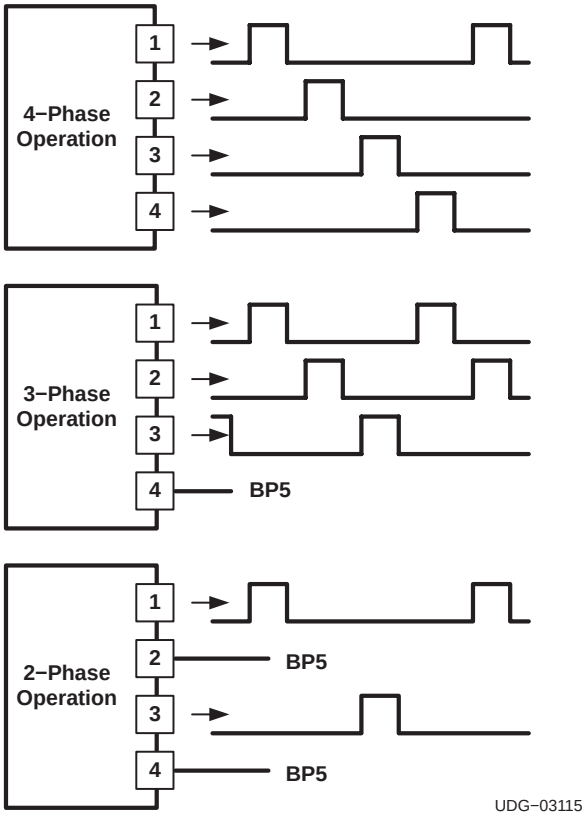

Figure 1. Programming Controller Configuration

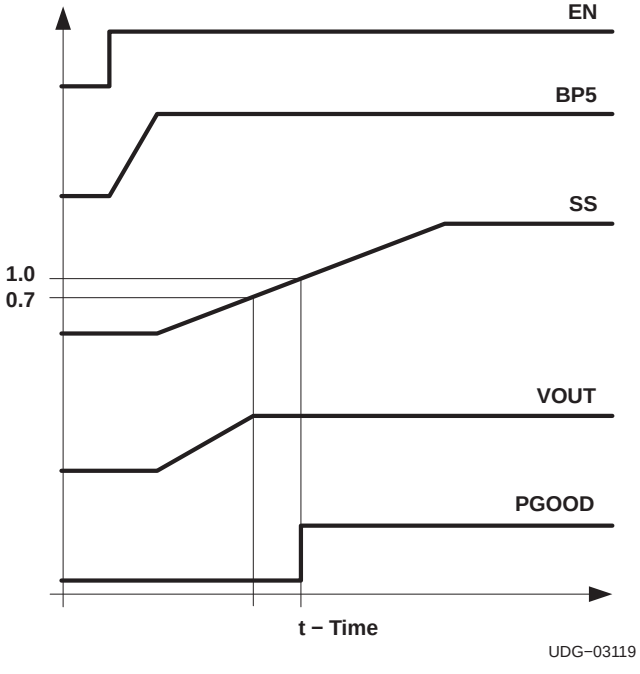

Figure 2. Power-Up Waveforms

When the BP5 pin voltage crosses its lower undervoltage threshold and the power-on reset function is cleared, the calibrated current source starts charging the soft start capacitor. The PGOOD pin is held low during the start up. The rising voltage across the capacitor serves as a reference for the error amplifier assuring start−up in a closed loop manner. When the soft start pin voltage reaches the level of the reference voltage V_{REF} = 0.7 V, the converter's output reaches the regulation point and further rise of the soft start voltage has no effect on the output.

APPLICATION INFORMATION

$$t_{SS} = \frac{0.7 \times C_{SS}}{5 \times 10^{-6}} \quad (2)$$

When the soft-start voltage reaches level of 1.0 V, the power good (PGOOD) function is cleared and reported on the PGOOD pin. Normally, the PGOOD pin goes high at this moment. The time from when SS begins to rise to when PGOOD is reported is:

$$t_{PG} = 1.43 \times T_{SS} \quad (3)$$

OUTPUT VOLTAGE PROGRAMMING

The converter output voltage is programmed by the R1/R2 divider from the output of the differential amplifier. The center point of the divider is connected to the inverting output of the error amplifier (FB), as shown in Figure 5.

$$V_{OUT} = 0.7\ V \times \left(\frac{R1}{R2} + 1\right) \quad (4)$$

CURRENT SENSE FAULT PROTECTION

Multiphase controllers with forced current sharing are inherently sensitive to failure of a current sense component. In case of such failure the whole load current can be steered with catastrophic consequences into a single channel where the fault has happened. The dedicated circuit in the TPS4009x controller prevents it from starting up if any current sense pin is open or shorted to ground. The current-sense fault detection circuit is active only during device initialization and does not protect should a current-sense failure happen during normal operation.

OVERVOLTAGE PROTECTION

If the voltage at the FB pin (V_{FB}) exceeds VREF by more than 16%, the TPS4009x enters into an overvoltage state. In this condition, the output signals from the controller to the external drivers is pulled low, causing the drivers to force all of the upper MOSFETs to the OFF position and all the lower MOSFETs to the ON position. As soon as V_{FB} returns to regulation, the normal operaing state resumes.

OVERCURRENT PROTECTION

The overcurrent function monitors the voltage level separately on each current sense input and compares it to the voltage on the ILIM pin set by a divider from the controller's reference. In case a threshold of $V_{ILIM}/2.7$ is exceeded the PWM cycle on the associated phase is terminated. The voltage level on the ILIM pin is determined by the following expression:

$$V_{ILIM} = 2.7 \times I_{PH(max)} \times R_{CS} \quad (5)$$

$$I_{PH(max)} = I_{OUT} + \frac{\left(V_{IN} - V_{OUT}\right) \times V_{OUT}}{2 \times L \times f_{SW} \times V_{IN}} \quad (6)$$

where

- $I_{PH(max)}$ is a maximum value of the phase current allowed
- R_{CS} is a value of the current sense resistor used

APPLICATION INFORMATION

If the overcurrent condition continues, each phase's PWM cycle is terminated by the overcurrent signals. This puts a converter in a constant current mode with the output current programmed by the ILIM voltage. Eventually the supply and demand equilibrium on the converter output fails and the output voltage declines. When the undervoltage threshold is reached, the converter enters a hiccup mode. The controller is stopped and the output is not regulated any more, the softstart pin function changes. It serves now as a timing capacitor for a fault control circuit. The soft-start pin is periodically charged and discharged by the fault control circuit. After seven hiccup cycles expire, the controller attempts to restore normal operation. If the overload condition is not cleared, the controller stays in the hiccup mode indefinitely long. In such conditions the average current delivered to the load is roughly 1/8 of the set overcurrent value.

UNDERVOLTAGE PROTECTION

If the FB pin voltage falls lower than the undervoltage protection threshold (84.5%), the controller enters the hiccup mode as it is described in the Overcurrent Protection section.

FAULT-FREE OPERATION

If the SS pin voltage is externally prevented from rising above the 1-V threshold, the controller does not execute nor report most faults and the PGOOD output remains low. Only the overcurrent function and current-sense fault remain active. The overcurrent protection continues to terminate PWM cycle every time when the threshold is exceeded but the hiccup mode is not entered.

APPLICATION INFORMATION

SETTING THE SWITCHING FREQUENCY

The clock frequency is programmed by the value of the timing resistor connected from the RT pin to ground.

$$R_{RT} = K_{PH} \times \left(39.2 \times 10^3 \times f_{PH}^{-1.041} - 7\right) \quad (7)$$

where K_{PH} is a coefficient that depends on the number of active phases. For two-phase and three-phase configurations K_{PH}=1.333. For four-phase configurations, K_{PH}=1.0. f_{PH} is a single phase frequency, kHz. The RT resistor value is returned by the last expression in kΩ.

To calculate the output ripple frequency, use the following equation:

$$F_{RPL} = N_{PH} \times f_{PH} \quad (8)$$

where

- N_{PH} is a number of phases used in the converter

The switching frequency of the controller can be synchronized to an external clock applied to the EN/SYNC pin. The external frequency should be somewhat higher than the free-running clock frequency for synchronization to take place.

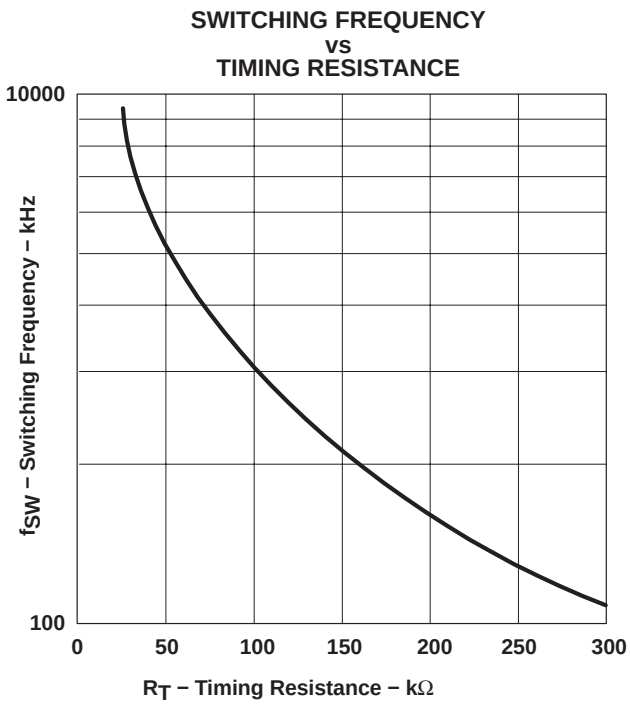

Figure 3

APPLICATION INFORMATION

SETTING THE OUTPUT VOLTAGE DROOP

In many applications the output voltage of the converter is intentionally allowed to droop as load current increases. This approach (sometimes referred to as active load line programming) allows for better use of the regulation window and reduces the amount of the output capacitors required to handle the same load current step. A resistor from the REF pin to the DROOP pin sets the desired value of the output voltage droop.

$$R_{DROOP} = \frac{2500\ N_{PH} \times V_{DROOP}}{I_{OUT} \times R_{CS}} \times \frac{V_{REF}}{V_{OUT}} = \frac{2500\ N_{PH} \times V_{DROOP}}{V_{CS1} + V_{CS2} + V_{CS3} + V_{CS4}} \times \frac{R2}{R1 + R2} \qquad (9)$$

where

- V_{DROOP} is the value of droop at maximum load current I_{OUT}
- N_{PH} is number of phases
- R_{CS} is the current-sense resistor value
- 2500 Ω is the inversed value of transconductance from the current sense pins to DROOP
- V_{CSx}, are the average voltages on the current sense pins

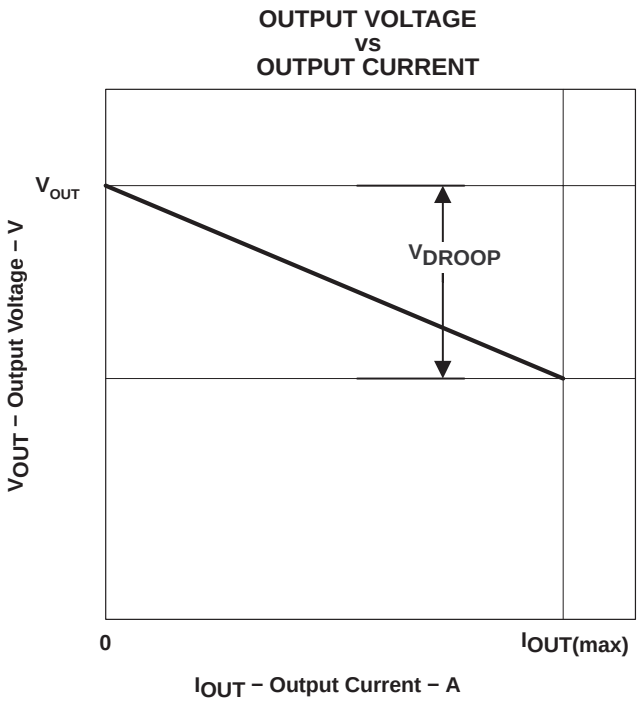

Figure 4

UDG−03116

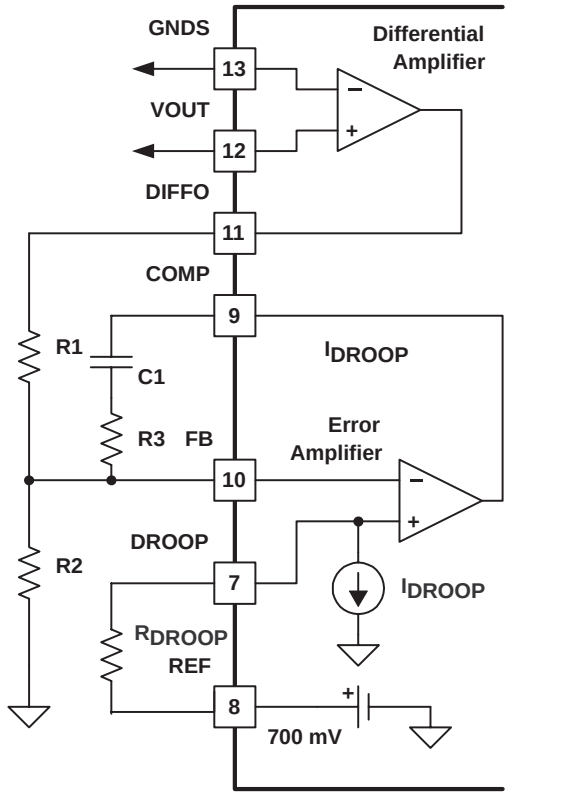

Figure 5

UDG−03117

APPLICATION INFORMATION

FEEDBACK LOOP COMPENSATION

The TPS4009x operates in a peak current mode and the converter exhibits a single pole response with ESR zero for which Type II compensation network is usually adequate, as shown in Figure 7.

The following equations show where the load pole and ESR zero calculations are situated.

$$f_{OP} = \frac{1}{2\pi \times R_{OUT} \times C_{OUT}} \qquad f_{ESRZ} = \frac{1}{2\pi \times R_{ESR} \times C_{OUT}} \tag{10}$$

To achieve desired bandwidth the error amplifier must compensate for modulator gain loss on the crossover frequency and this is facilitated by placing the zero over the load pole. The ESR zero alters the modulator's −1 slope at higher frequencies.To compensate for that alteration, the pole in-error amplifier transfer function should be added at frequency of the ESR zero as shown in Figure 6.

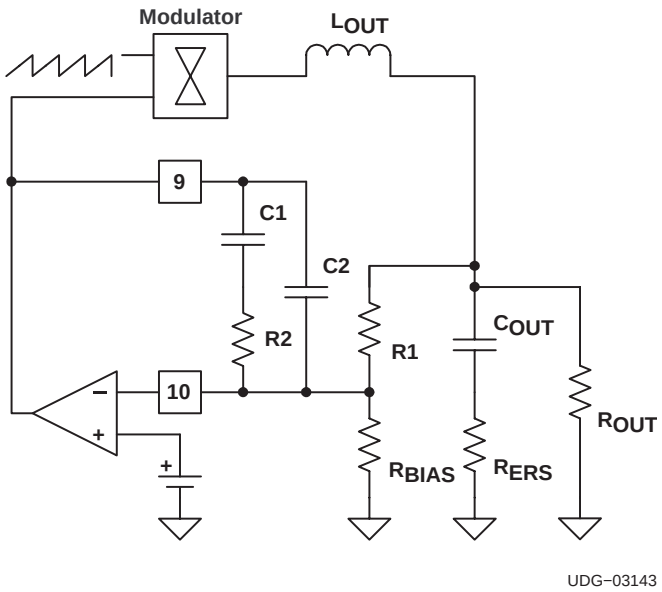

Figure 6

The following equations help in choosing components of the error amplifier compensation network. Fixing the value of the resistor R1 first is recommended as it simplifies further adjustments of the output voltage without altering the compensation network.

$$R2 = R1 \times 10^{\left(\frac{-G_{OMAG}}{20}\right)}; \quad C1 = \frac{1}{\left(2\pi \times F_{OP} \times R2\right)}; \quad C2 = \frac{1}{\left(2\pi \times F_{ESRZ} \times R2\right)} \tag{11}$$

Introduction of output voltage droop as a measure to reduce amount of filter capacitors changes the transfer function of the modulator as it is shown in the Figure 8.

APPLICATION INFORMATION

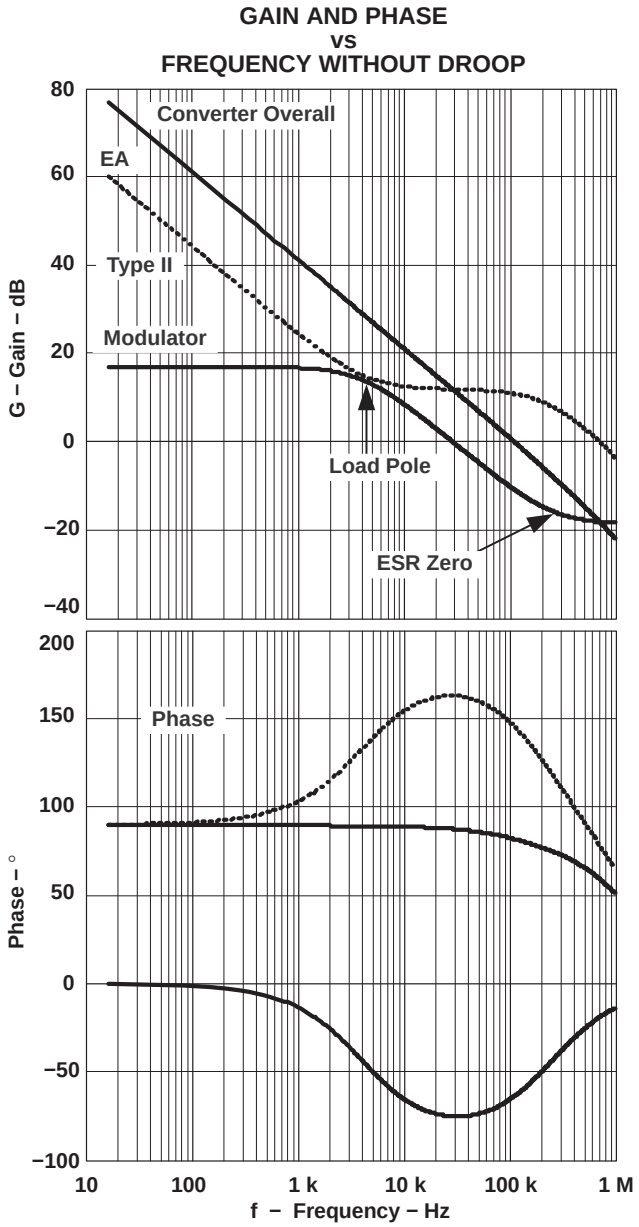

Figure 7

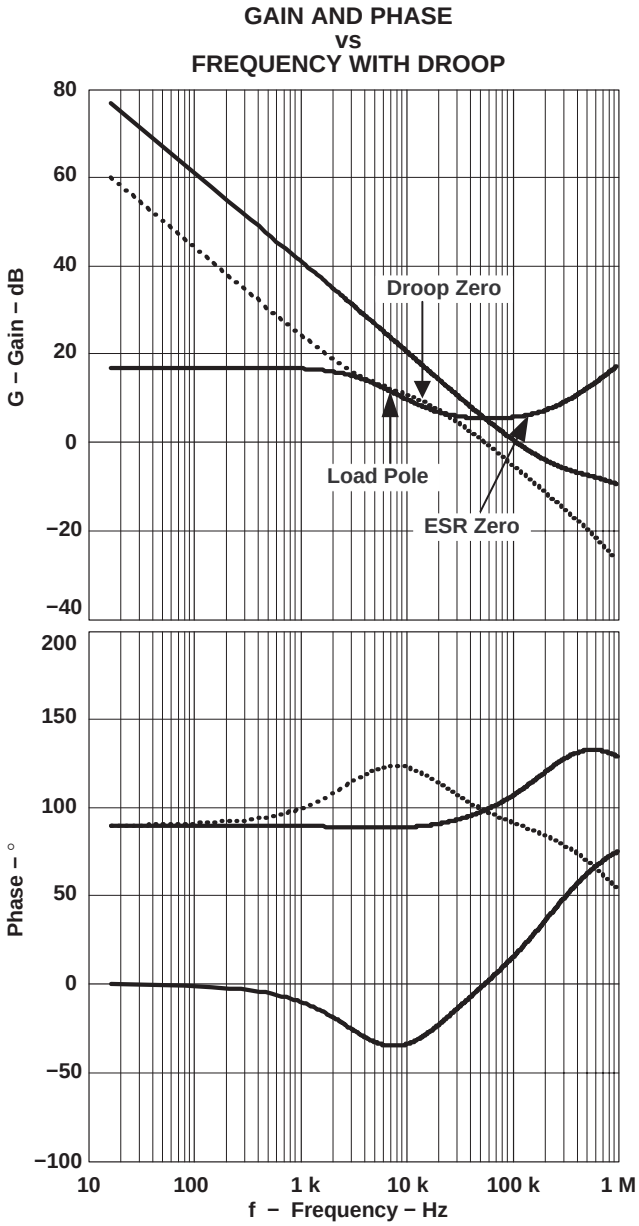

Figure 8

APPLICATION INFORMATION

The droop function, as well as the output capacitor ESR, introduces zero on some frequency left of the crossover point.

$$F_{DROOPZ} = \frac{1}{2\pi \left(\frac{V_{DROOP}}{I_{OUT(max)}}\right) \times C_{OUT}} \tag{12}$$

To compensate for this zero, pole on the same frequency should be added to the error amplifier transfer function. With Type II compensation network a new value for the capacitor C2 is required compared to the case without droop.

$$C2 = \frac{C1}{2\pi \times R2 \times C1 \times \left(F_{DROOPZ} - 1\right)} \tag{13}$$

When attempting to close the feedback loop at frequency that is near the theoretical limit, use the above considerations as a first approximation and perform on bench measurements of closed loop parameters as effects of switching frequency proximity and finite bandwidth of voltage and current amplifiers may substantially alter them as it is shown in Figure 9.

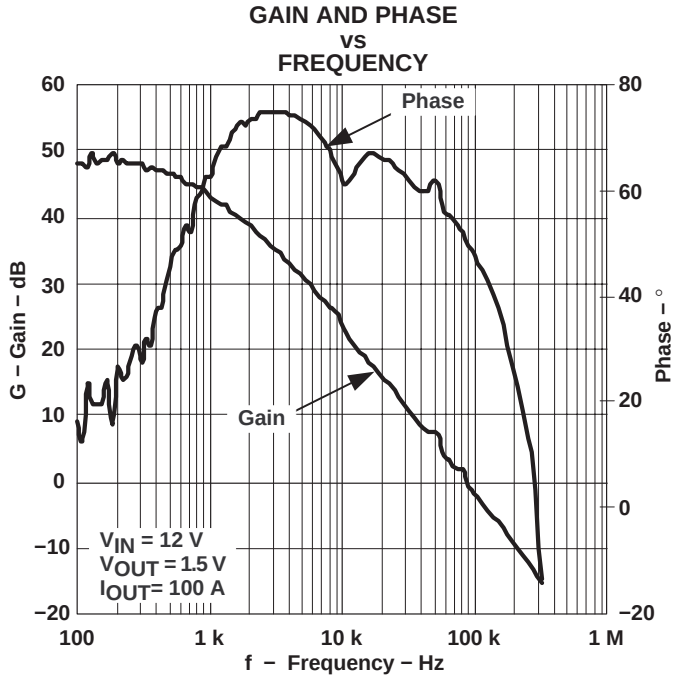

Figure 9

APPLICATION INFORMATION

THERMAL COMPENSATION OF DCR CURRENT SENSING

Inductor DCR current sensing is a known lossless technique to retrieve a current proportional signal. Equations (14) and (15) show the calculation used to determine the DCR voltage drop for any given frequency. (See Figure 10)

$$V_{DCR} = \left(V_{IN} - V_{OUT}\right) \times \frac{DCR}{DCR + \omega \times L} \tag{14}$$

$$V_C = \left(V_{IN} - V_{OUT}\right) \times \frac{1}{\omega \times C \times \left(R + \frac{1}{\omega \times C}\right)} \tag{15}$$

Voltage across the capacitor is equal to voltage drop across the inductor DCR, V_C=V_{DCR} when time constant of the inductor and the time constant of the R-C network are equal:

$$V_C = \frac{1}{\omega \times C \times \left(R + \frac{1}{\omega \times C}\right)} = \frac{DCR}{DCR + \omega \times L}; \quad \frac{L}{DCR} = R \times C; \quad \tau_{DCRL} = \tau_{RC} \tag{16}$$

The output signal generated by the network shown in Figure 10 is temperature dependant due to positive thermal coefficient of copper specific resistance as determined using equation (17). The temperature variation of the inductor coil can easily exceed 100°C in a practical application leading to approximately 40% variation in the output signal and in turn, respectively move the overcurrent threshold and the load line.

$$K(T) = 1 + 0.0039 \times (T - 25) \tag{17}$$

The relatively simple network shown in Figure 11 (made of passive components including one NTC resistor) can provide almost complete compensation for copper thermal variations.

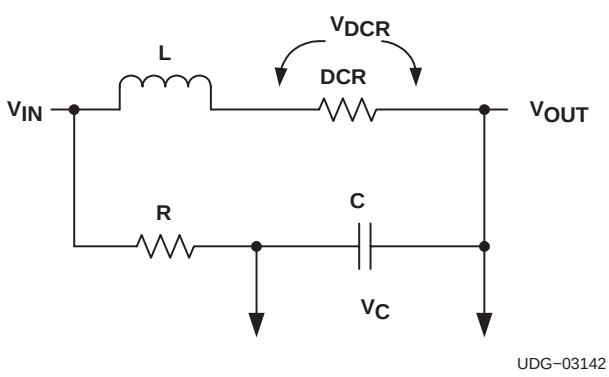

Figure 10

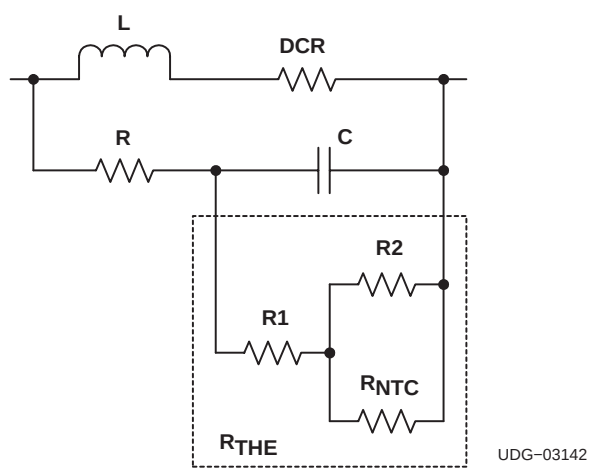

Figure 11

APPLICATION INFORMATION

The following algorithm and expressions help to determine components of the network.

1. Calculate the equivalent impedance of the network at 25°C that matches the inductor parameters in equation (18). It is recommended to use COG type capacitors for this application. For example, for L=0.4 µH, DCR=1.22 mΩ, C=10 nF; R_E=33.3 kΩ. It is recommended to keep R_E < 50 kΩ as higher values may produce false triggering of the current sense fault protection.

$$R_E = \frac{\frac{L}{DCR}}{C} \tag{18}$$

2. It is necessary to set the network attenuation value $K_{DIV}(25)$ at 25°C. For example, $K_{DIV}(25)$=0.85. The attenuation values $K_{DIV}(25)$>0.9 produces higher values for NTC resistors that are harder to get from suppliers. Attenuation values lower 0.7 substantially reduce the network output signal.

3. Based on calculated R_E and $K_{DIV}(25)$ values, calculate and pick the closest standard value for the resistor $R=R_E/K_{DIV}(25)$. For the given example R=33kΩ/0.85=38.8kΩ. The closest standard value from 1% line is R=39.2kΩ.

4. Pick two temperature values at which curve fitting is made. For example T1=50°C and T2=90°C.

5. Find the relative values of R_{THE} required on each of these temperatures.

$$R_{THE1} = \frac{R_{THE}(T1)}{R_{THE}(25)} \qquad R_{THE2} = \frac{R_{THE}(T2)}{R_{THE}(25)} \tag{19}$$

$$R_T = \frac{K_{DIV}(T)}{1 - K_{DIV}(T)} \times R \qquad K_{DIV}(T) = \frac{K_{DIV}(25)}{1 + 0.0039 \times (t - 25)} \tag{20}$$

For the given example R_{THE1}= 0.606, R_{THE2}=0.372.

6. From the NTC resistor datasheet get the relative resistance for resistors with desired curve. For the given example and curve 17 for NTHS NTC resistors from Vishay R_{NTC1}=0.3507 and R_{NTC2}=0.08652.

7. Calculate relative values for network resistors including the NTC resistor.

$$R1_R = \frac{\left(R_{NTC1} - R_{NTC2}\right) \times R_{E1} \times R_{E2} - R_{NTC1} \times R_{E2} \times \left(1 - R_{NTC2}\right) + R_{NTC2} \times R_{E1} \times \left(1 - R_{NTC1}\right)}{R_{NTC1} \times R_{E1} \times \left(1 - R_{NTC2}\right) - R_{NTC2} \times R_{E2} \times \left(1 - R_{NTC1}\right) - \left(R_{NTC1} - R_{NTC2}\right)}; \tag{21}$$

$$R2_R = \left(1 - R_{NTC1}\right) \times \left[\frac{1}{1 - R1_R} - \frac{R_{NTC1}}{R_{E1} - R1_R}\right]^{-1}; \tag{22}$$

$$RNTC_R = \left[\left(1 - R1_R\right)^{-1} - \left(R2_R\right)^{-1}\right]^{-1} \tag{23}$$

For the given example $R1_R$= 0.281, $R2_R$=2.079, and $RNTC_R$ = 1.1.

8. Calculate the absolute value of the NTC resistor as $R_{THE}(25)$. In given example R_{NTC}=244.3 kΩ.

APPLICATION INFORMATION

9. Find a standard value for the NTC resistor with chosen curve type. In case the close value does not exist in a desired form factor or curve type. Chose a different type of the NTC resistor and repeat steps 6 to 9. In the example, the NTC resistor with the part number NTHS0402N17N2503J with $R_{NTCS}(25)$=250 kΩ is close enough to the calculated value.

10. Calculate a scaling factor for the chosen NTC resistor as a ratio between selected and calculated NTC value and. In the example k=1.023.

$$k = \frac{RNTC_S}{RNTC_C} \tag{24}$$

11. Calculate values of the remaining network resistors.

$$R1_C = R_{THE}(25) \times \left[\left((1 - k) + k \times R1_R\right)\right] \tag{25}$$

For the given example $R1_C$=58.7 kΩ and $R2_C$=472.8 kΩ. Pick the closest available 1% standard values: R1=39.2 kΩ, and R2=475 kΩ, thus completing the design of the thermally compensated network for the DCR current sensor.

Figure 24 illustrates the fit of the designed network to the required function.

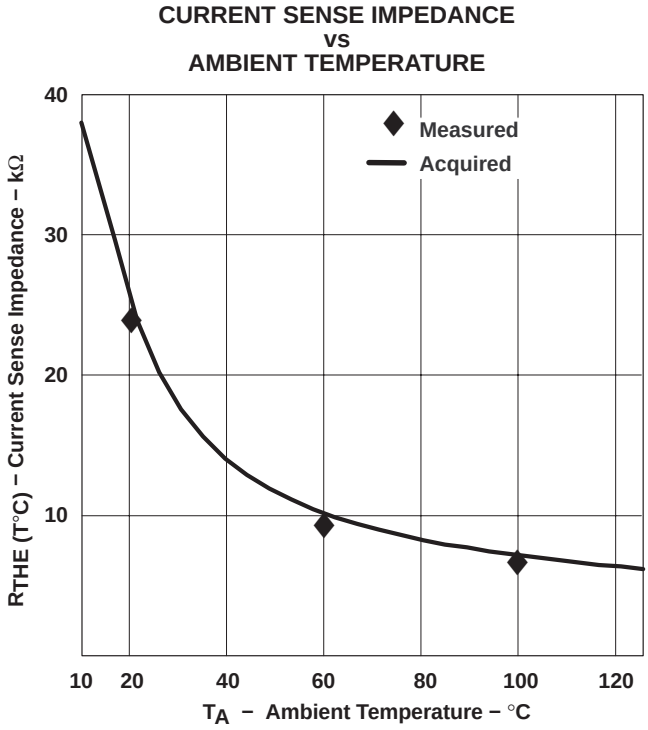

Figure 12

Operation with Output Voltages Higher Than 3.3 V

The TPS40090/91 controllers are designed to operate in power supplies with output voltages ranging from 0.7 V to 3.3 V. To support higher output voltages, mainly in 12.0 V to 5.0 V power supplies, the BP5 voltage needs to be increased slightly to provide enough headroom to ensure linearity of current sense amplifiers. The simple circuit on Figure 13 shows a configuration that generates a 6.0-V voltage source to power the controller with increased bias voltage. Both the VIN and BP5 pins should be connected to this voltage source. The differential amplifier normally excessive for higher-output voltages can be disabled by connecting GNDS pin to the BP5 pin.

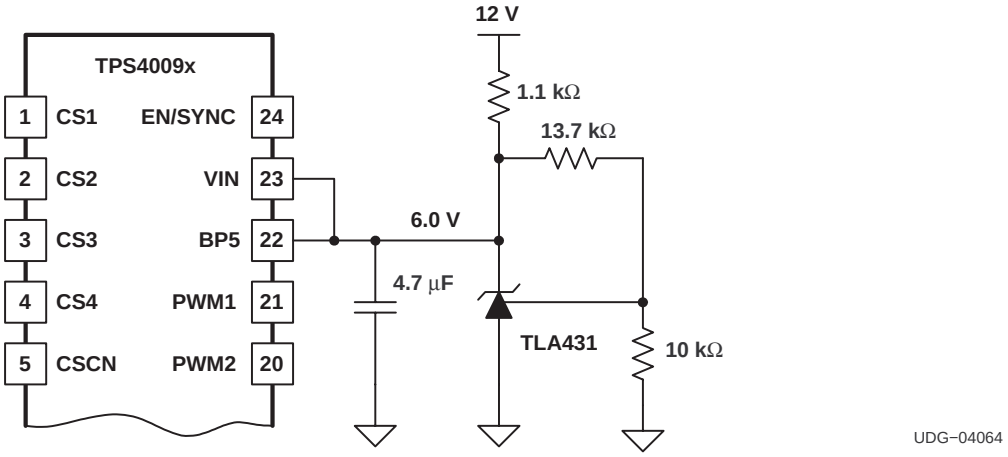

Figure 13. Biasing the TPS4009x with a 5.0-V Power Supply

High-Impedance State of TPS40091 Outputs

The TPS40091 controller has three-state enabled outputs to interface various gate drivers and DRMOS devices capable of turning all MOSFETs in the power supply into high-impedance state while remaining active. The common binary output commands the control MOSFET on when the PWM signal is high. Alternatively, the synchronous MOSFET is commanded on when the PWM signal is low.

The three-state output can command both MOSFETs off when the PWM output is in the high-impedance state. This feature simplifies design of power supplies capable of starting into pre-charged output or allows in VR modules use of gate drivers that do not have the enable input to put VR module off line. Some DRMOS devices like Philips PIP202 also made compatible with three-state outputs of the multiphase controller.

The TPS40091 outputs have high impedance when the EN pin is high but the soft-start sequence has not been initiated yet. The output impedance is also high when controller is in undervoltage fault condition or disabled. Figure 14 shows a 12-V, 80-A, all-ceramic power supply capable to start into pre-charged outputs.

DESIGN EXAMPLE

A design example is available. Please refer to the TPS40090EVM−001 user's guide (SLUU175).

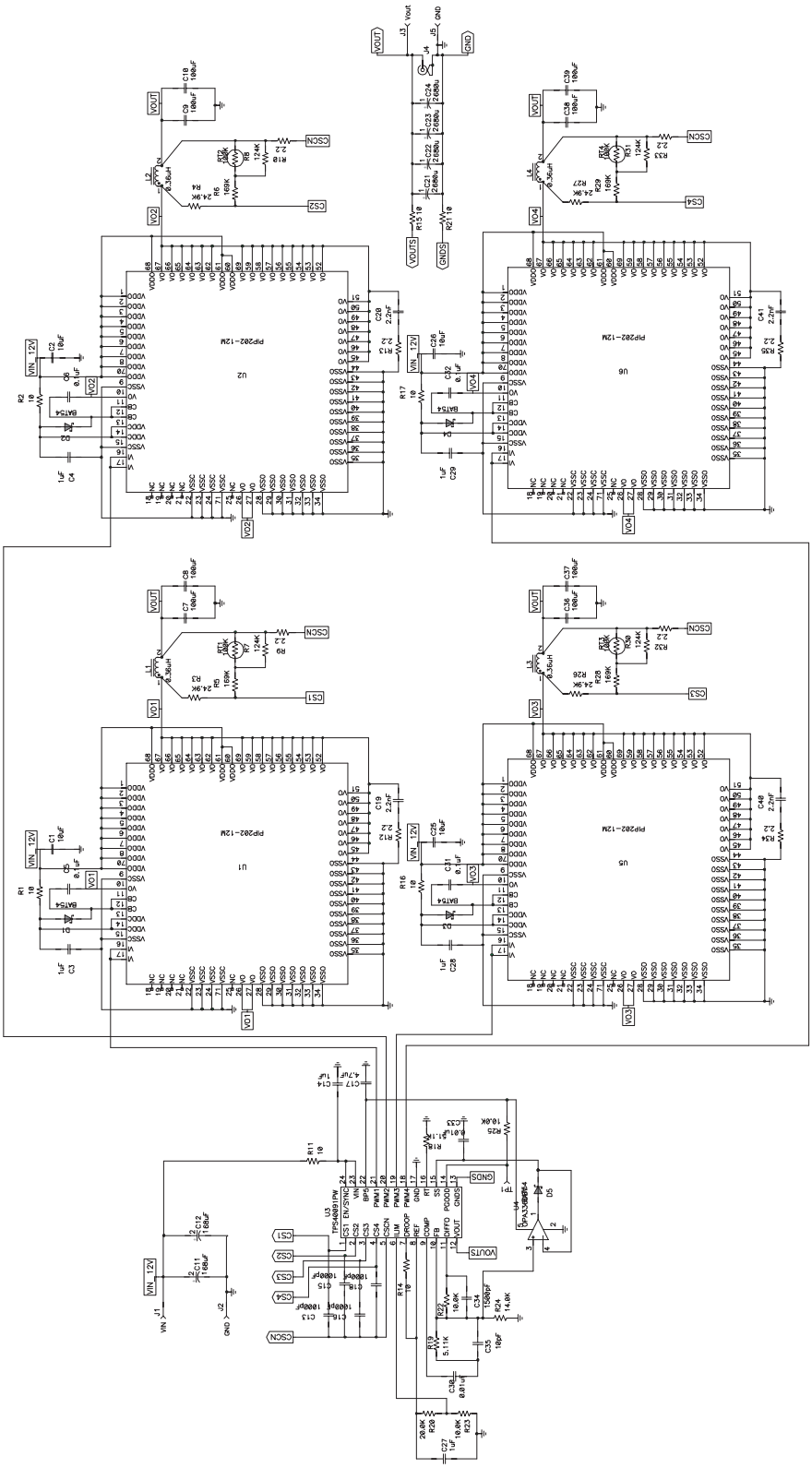

Figure 14. 1.2-V, 80-A ASIC All-Ceramic, Power Supply

PACKAGING INFORMATION

Orderable Device	Status [1]	Package Type	Package Drawing	Pins	Package Qty	Eco Plan [2]	Lead/Ball Finish	MSL Peak Temp [3]
TPS40090PW	ACTIVE	TSSOP	PW	24	60	TBD	CU NIPDAU	Level-1-220C-UNLIM
TPS40090PWR	ACTIVE	TSSOP	PW	24	2000	TBD	CU NIPDAU	Level-1-220C-UNLIM
TPS40091PW	ACTIVE	TSSOP	PW	24	60	TBD	CU NIPDAU	Level-1-220C-UNLIM
TPS40091PWR	ACTIVE	TSSOP	PW	24	2000	TBD	CU NIPDAU	Level-1-220C-UNLIM

[1] The marketing status values are defined as follows:
ACTIVE: Product device recommended for new designs.
LIFEBUY: TI has announced that the device will be discontinued, and a lifetime-buy period is in effect.
NRND: Not recommended for new designs. Device is in production to support existing customers, but TI does not recommend using this part in a new design.
PREVIEW: Device has been announced but is not in production. Samples may or may not be available.
OBSOLETE: TI has discontinued the production of the device.

[2] Eco Plan - The planned eco-friendly classification: Pb-Free (RoHS) or Green (RoHS & no Sb/Br) - please check http://www.ti.com/productcontent for the latest availability information and additional product content details.
TBD: The Pb-Free/Green conversion plan has not been defined.
Pb-Free (RoHS): TI's terms "Lead-Free" or "Pb-Free" mean semiconductor products that are compatible with the current RoHS requirements for all 6 substances, including the requirement that lead not exceed 0.1% by weight in homogeneous materials. Where designed to be soldered at high temperatures, TI Pb-Free products are suitable for use in specified lead-free processes.
Green (RoHS & no Sb/Br): TI defines "Green" to mean Pb-Free (RoHS compatible), and free of Bromine (Br) and Antimony (Sb) based flame retardants (Br or Sb do not exceed 0.1% by weight in homogeneous material)

[3] MSL, Peak Temp. -- The Moisture Sensitivity Level rating according to the JEDEC industry standard classifications, and peak solder temperature.

Important Information and Disclaimer: The information provided on this page represents TI's knowledge and belief as of the date that it is provided. TI bases its knowledge and belief on information provided by third parties, and makes no representation or warranty as to the accuracy of such information. Efforts are underway to better integrate information from third parties. TI has taken and continues to take reasonable steps to provide representative and accurate information but may not have conducted destructive testing or chemical analysis on incoming materials and chemicals. TI and TI suppliers consider certain information to be proprietary, and thus CAS numbers and other limited information may not be available for release.

In no event shall TI's liability arising out of such information exceed the total purchase price of the TI part(s) at issue in this document sold by TI to Customer on an annual basis.

PW (R-PDSO-G)** **PLASTIC SMALL-OUTLINE PACKAGE**

14 PINS SHOWN

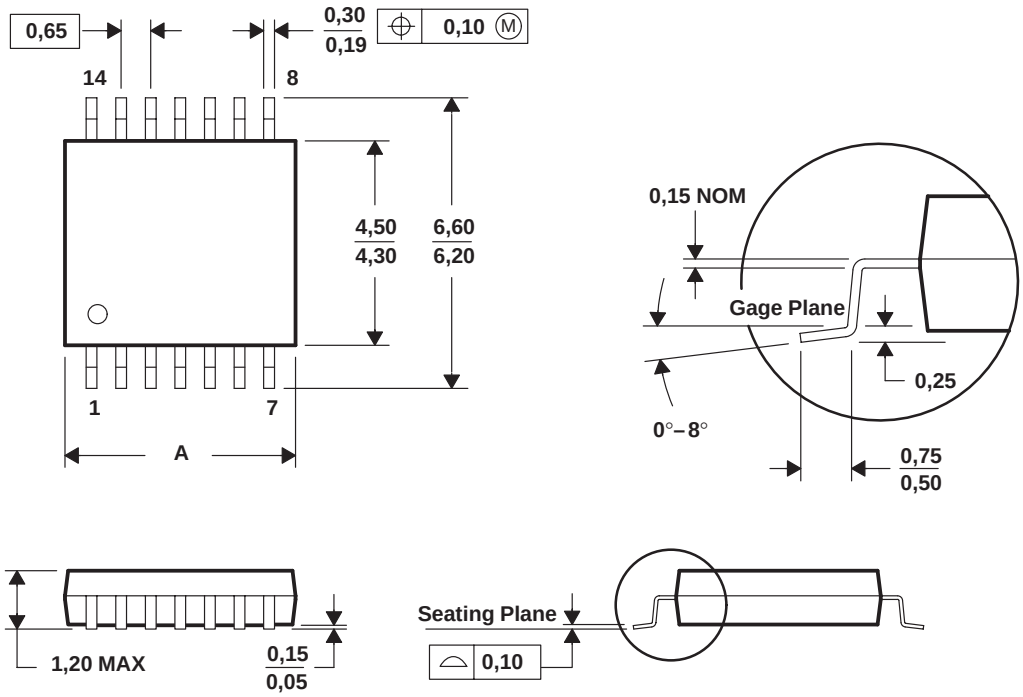

DIM \ PINS **	8	14	16	20	24	28
A MAX	3,10	5,10	5,10	6,60	7,90	9,80
A MIN	2,90	4,90	4,90	6,40	7,70	9,60

4040064/F 01/97

NOTES: A. All linear dimensions are in millimeters.
B. This drawing is subject to change without notice.
C. Body dimensions do not include mold flash or protrusion not to exceed 0,15.
D. Falls within JEDEC MO-153

IMPORTANT NOTICE

Texas Instruments Incorporated and its subsidiaries (TI) reserve the right to make corrections, modifications, enhancements, improvements, and other changes to its products and services at any time and to discontinue any product or service without notice. Customers should obtain the latest relevant information before placing orders and should verify that such information is current and complete. All products are sold subject to TI's terms and conditions of sale supplied at the time of order acknowledgment.

TI warrants performance of its hardware products to the specifications applicable at the time of sale in accordance with TI's standard warranty. Testing and other quality control techniques are used to the extent TI deems necessary to support this warranty. Except where mandated by government requirements, testing of all parameters of each product is not necessarily performed.

TI assumes no liability for applications assistance or customer product design. Customers are responsible for their products and applications using TI components. To minimize the risks associated with customer products and applications, customers should provide adequate design and operating safeguards.

TI does not warrant or represent that any license, either express or implied, is granted under any TI patent right, copyright, mask work right, or other TI intellectual property right relating to any combination, machine, or process in which TI products or services are used. Information published by TI regarding third-party products or services does not constitute a license from TI to use such products or services or a warranty or endorsement thereof. Use of such information may require a license from a third party under the patents or other intellectual property of the third party, or a license from TI under the patents or other intellectual property of TI.

Reproduction of information in TI data books or data sheets is permissible only if reproduction is without alteration and is accompanied by all associated warranties, conditions, limitations, and notices. Reproduction of this information with alteration is an unfair and deceptive business practice. TI is not responsible or liable for such altered documentation.

Resale of TI products or services with statements different from or beyond the parameters stated by TI for that product or service voids all express and any implied warranties for the associated TI product or service and is an unfair and deceptive business practice. TI is not responsible or liable for any such statements.

Following are URLs where you can obtain information on other Texas Instruments products and application solutions:

Products		**Applications**	
Amplifiers	amplifier.ti.com	Audio	www.ti.com/audio
Data Converters	dataconverter.ti.com	Automotive	www.ti.com/automotive
DSP	dsp.ti.com	Broadband	www.ti.com/broadband
Interface	interface.ti.com	Digital Control	www.ti.com/digitalcontrol
Logic	logic.ti.com	Military	www.ti.com/military
Power Mgmt	power.ti.com	Optical Networking	www.ti.com/opticalnetwork
Microcontrollers	microcontroller.ti.com	Security	www.ti.com/security
		Telephony	www.ti.com/telephony
		Video & Imaging	www.ti.com/video
		Wireless	www.ti.com/wireless

Mailing Address: Texas Instruments
Post Office Box 655303 Dallas, Texas 75265

Copyright © 2005, Texas Instruments Incorporated