查询MC10174供应商 捷多邦，专业PCB打样工厂，24小时加急出货

Dual 4 to 1 Multiplexer

MC10174

The MC10174 is a high speed dual channel multiplexer with output enable capability. The select inputs determine one of four active data inputs for each multiplexer. An output enable forces both outputs low when in the high state.

P_D = 305 mW typ/pkg (No Load)
t_{pd} = 3.5 ns typ (Data to output)
t_r, t_f = 2.0 ns typ (20%–80%)

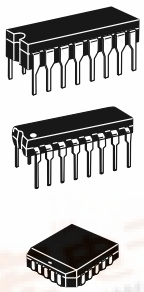

L SUFFIX
CERAMIC PACKAGE
CASE 620–10

P SUFFIX
PLASTIC PACKAGE
CASE 648–08

FN SUFFIX
PLCC
CASE 775–02

LOGIC DIAGRAM

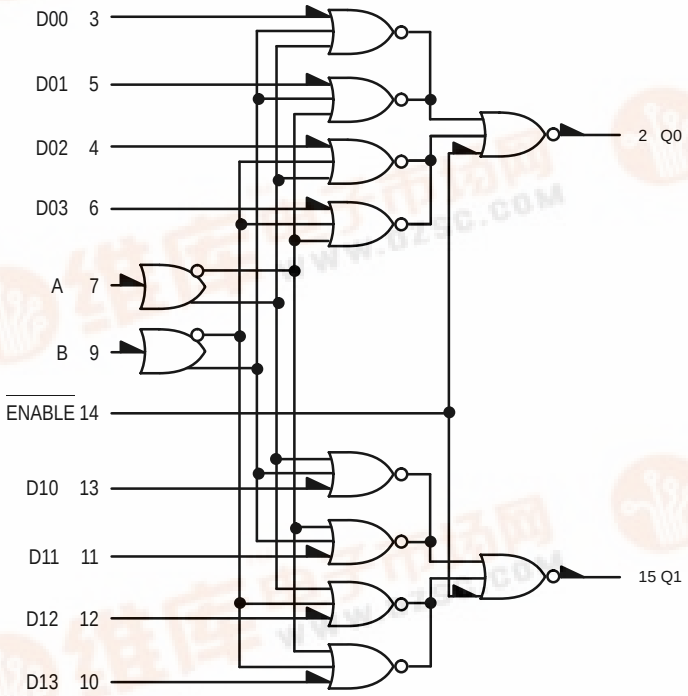

V_{CC1} = PIN 1
V_{CC2} = PIN 16
V_{EE} = PIN 8

DIP PIN ASSIGNMENT

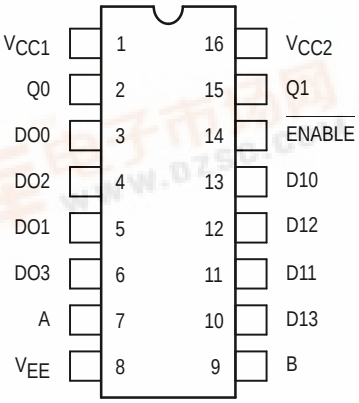

Pin assignment is for Dual–in–Line Package. For PLCC pin assignment, see the Pin Conversion Tables on page 6–36 of the Motorola MECL Data Book (DL122/D).

TRUTH TABLE

ENABLE	ADDRESS INPUTS		OUTPUTS	
$\overline{E}$	B	A	Q0	Q1
H	X	X	L	L
L	L	L	D00	D10
L	L	H	D01	D11
L	H	L	D02	D12
L	H	H	D03	D13

找PDF 维库一下 pdf.dzsc.com

ELECTRICAL CHARACTERISTICS

Characteristic	Symbol	Pin Under Test	Test Limits –30°C Min	–30°C Max	+25°C Min	+25°C Typ	+25°C Max	+85°C Min	+85°C Max	Unit
Power Supply Drain Current	I_E	8		80		58	73	80		mAdc
Input Current	I_{inH}	4 14		350 525			220 330		220 330	µAdc
	I_{inL}	4	0.5		0.5			0.3		µAdc
Output Voltage Logic 1	V_{OH}	15	–1.060	–0.890	–0.960		–0.810	–0.890	–0.700	Vdc
Output Voltage Logic 0	V_{OL}	15	–1.890	–1.675	–1.850		–1.650	–1.825	–1.615	Vdc
Threshold Voltage Logic 1	V_{OHA}	15	–1.080		–0.980			–0.910		Vdc
Threshold Voltage Logic 0	V_{OLA}	15		–1.655			–1.630		–1.595	Vdc
Switching Times (50Ω Load)										ns
Propagation Delay	t_{13+15+}	15	1.4	5.0	1.5	3.5	4.7	1.4	5.0	
	t_{13-15-}	15	1.4	5.0	1.5	3.5	4.7	1.4	5.0	
	t_{7+15-}	15	1.9	6.6	2.0	5.0	6.2	2.1	6.6	
	t_{7-15+}	15	1.9	6.6	2.0	5.0	6.2	2.1	6.6	
	t_{14+15-}	15	1.0	3.3	1.0	2.0	3.1	0.9	3.4	
	t_{14-15+}	15	1.0	3.3	1.0	2.0	3.1	0.9	3.4	
Rise Time (20 to 80%)	t+	15	1.0	3.4	1.1	2.0	3.3	1.1	3.6	
Fall Time (20 to 80%)	t–	15	1.0	3.4	1.1	2.0	3.3	1.1	3.6	

ELECTRICAL CHARACTERISTICS (continued)

Each MECL 10,000 series circuit has been designed to meet the dc specifications shown in the test table, after thermal equilibrium has been established. The circuit is in a test socket or mounted on a printed circuit board and transverse air flow greater than 500 linear fpm is maintained. Outputs are terminated through a 50–ohm resistor to –2.0 volts. Test procedures are shown for only one gate. The other gates are tested in the same manner.

@ Test Temperature	TEST VOLTAGE VALUES (Volts) V_{IHmax}	V_{ILmin}	V_{IHAmin}	V_{ILAmax}	V_{EE}
–30°C	–0.890	–1.890	–1.205	–1.500	–5.2
+25°C	–0.810	–1.850	–1.105	–1.475	–5.2
+85°C	–0.700	–1.825	–1.035	–1.440	–5.2

Characteristic	Symbol	Pin Under Test	TEST VOLTAGE APPLIED TO PINS LISTED BELOW V_{IHmax}	V_{ILmin}	V_{IHAmin}	V_{ILAmax}	V_{EE}	(V_{CC}) Gnd
Power Supply Drain Current	I_E	8					8	1, 16
Input Current	I_{inH}	4 14	4 14				8 8	1, 16 1, 16
	I_{inL}	4		4			8	1, 16
Output Voltage Logic 1	V_{OH}	15	13				8	1, 16
Output Voltage Logic 0	V_{OL}	15	14				8	1, 16
Threshold Voltage Logic 1	V_{OHA}	15			13		8	1, 16
Threshold Voltage Logic 0	V_{OLA}	15			14		8	1, 16
Switching Times (50Ω Load)			**+1.11V**		**Pulse In**	**Pulse Out**	**–3.2 V**	**+2.0 V**
Propagation Delay	t_{13+15+}	15			13	15	8	1, 16
	t_{13-15-}	15			13	15	8	1, 16
	t_{7+15-}	15	11		7	15	8	1, 16
	t_{7-15+}	15	11		7	15	8	1, 16
	t_{14+15-}	15	13		14	15	8	1, 16
	t_{14-15+}	15	13		14	15	8	1, 16
Rise Time (20 to 80%)	t+	15	13		14	15	8	1, 16
Fall Time (20 to 80%)	t–	15	13		14	15	8	1, 16

OUTLINE DIMENSIONS

FN SUFFIX
PLASTIC PLCC PACKAGE
CASE 775–02
ISSUE C

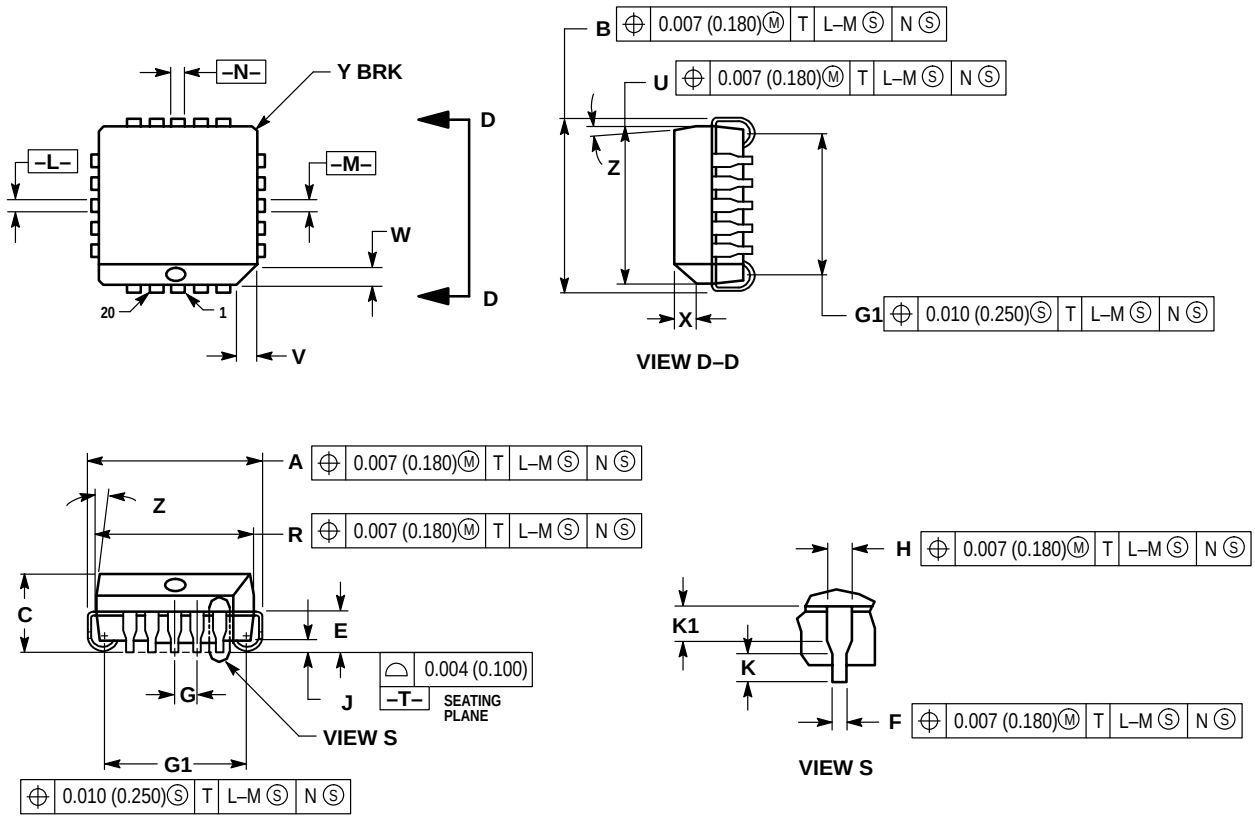

NOTES:
1. DATUMS –L–, –M–, AND –N– DETERMINED WHERE TOP OF LEAD SHOULDER EXITS PLASTIC BODY AT MOLD PARTING LINE.
2. DIMENSION G1, TRUE POSITION TO BE MEASURED AT DATUM –T–, SEATING PLANE.
3. DIMENSIONS R AND U DO NOT INCLUDE MOLD FLASH. ALLOWABLE MOLD FLASH IS 0.010 (0.250) PER SIDE.
4. DIMENSIONING AND TOLERANCING PER ANSI Y14.5M, 1982.
5. CONTROLLING DIMENSION: INCH.
6. THE PACKAGE TOP MAY BE SMALLER THAN THE PACKAGE BOTTOM BY UP TO 0.012 (0.300). DIMENSIONS R AND U ARE DETERMINED AT THE OUTERMOST EXTREMES OF THE PLASTIC BODY EXCLUSIVE OF MOLD FLASH, TIE BAR BURRS, GATE BURRS AND INTERLEAD FLASH, BUT INCLUDING ANY MISMATCH BETWEEN THE TOP AND BOTTOM OF THE PLASTIC BODY.
7. DIMENSION H DOES NOT INCLUDE DAMBAR PROTRUSION OR INTRUSION. THE DAMBAR PROTRUSION(S) SHALL NOT CAUSE THE H DIMENSION TO BE GREATER THAN 0.037 (0.940). THE DAMBAR INTRUSION(S) SHALL NOT CAUSE THE H DIMENSION TO BE SMALLER THAN 0.025 (0.635).

	INCHES		MILLIMETERS	
DIM	MIN	MAX	MIN	MAX
A	0.385	0.395	9.78	10.03
B	0.385	0.395	9.78	10.03
C	0.165	0.180	4.20	4.57
E	0.090	0.110	2.29	2.79
F	0.013	0.019	0.33	0.48
G	0.050 BSC		1.27 BSC	
H	0.026	0.032	0.66	0.81
J	0.020	—	0.51	—
K	0.025	—	0.64	—
R	0.350	0.356	8.89	9.04
U	0.350	0.356	8.89	9.04
V	0.042	0.048	1.07	1.21
W	0.042	0.048	1.07	1.21
X	0.042	0.056	1.07	1.42
Y	—	0.020	—	0.50
Z	2°	10°	2°	10°
G1	0.310	0.330	7.88	8.38
K1	0.040	—	1.02	—

OUTLINE DIMENSIONS

L SUFFIX
CERAMIC DIP PACKAGE
CASE 620–10
ISSUE V

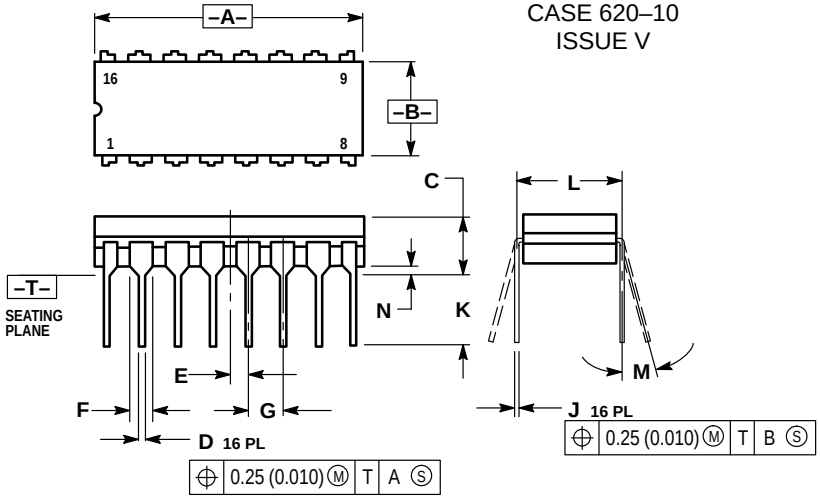

NOTES:
1. DIMENSIONING AND TOLERANCING PER ANSI Y14.5M, 1982.
2. CONTROLLING DIMENSION: INCH.
3. DIMENSION L TO CENTER OF LEAD WHEN FORMED PARALLEL.
4. DIMENSION F MAY NARROW TO 0.76 (0.030) WHERE THE LEAD ENTERS THE CERAMIC BODY.

	INCHES		MILLIMETERS	
DIM	MIN	MAX	MIN	MAX
A	0.750	0.785	19.05	19.93
B	0.240	0.295	6.10	7.49
C	—	0.200	—	5.08
D	0.015	0.020	0.39	0.50
E	0.050 BSC		1.27 BSC	
F	0.055	0.065	1.40	1.65
G	0.100 BSC		2.54 BSC	
H	0.008	0.015	0.21	0.38
K	0.125	0.170	3.18	4.31
L	0.300 BSC		7.62 BSC	
M	0°	15°	0°	15°
N	0.020	0.040	0.51	1.01

P SUFFIX
PLASTIC DIP PACKAGE
CASE 648–08
ISSUE R

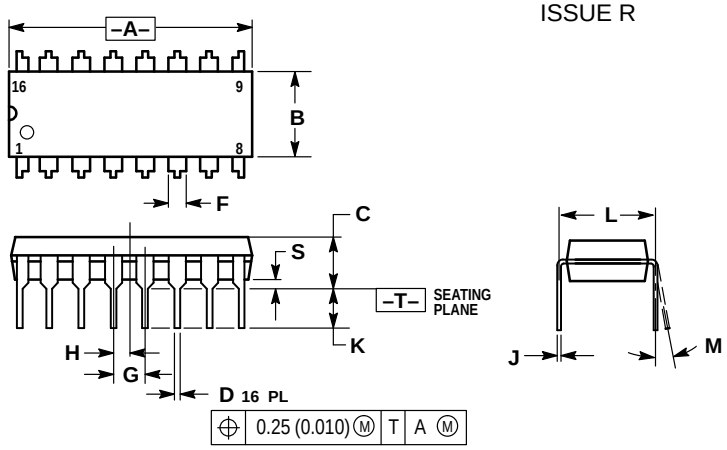

NOTES:
1. DIMENSIONING AND TOLERANCING PER ANSI Y14.5M, 1982.
2. CONTROLLING DIMENSION: INCH.
3. DIMENSION L TO CENTER OF LEADS WHEN FORMED PARALLEL.
4. DIMENSION B DOES NOT INCLUDE MOLD FLASH.
5. ROUNDED CORNERS OPTIONAL.

	INCHES		MILLIMETERS	
DIM	MIN	MAX	MIN	MAX
A	0.740	0.770	18.80	19.55
B	0.250	0.270	6.35	6.85
C	0.145	0.175	3.69	4.44
D	0.015	0.021	0.39	0.53
F	0.040	0.70	1.02	1.77
G	0.100 BSC		2.54 BSC	
H	0.050 BSC		1.27 BSC	
J	0.008	0.015	0.21	0.38
K	0.110	0.130	2.80	3.30
L	0.295	0.305	7.50	7.74
M	0°	10°	0°	10°
S	0.020	0.040	0.51	1.01

Motorola reserves the right to make changes without further notice to any products herein. Motorola makes no warranty, representation or guarantee regarding the suitability of its products for any particular purpose, nor does Motorola assume any liability arising out of the application or use of any product or circuit, and specifically disclaims any and all liability, including without limitation consequential or incidental damages. “Typical” parameters which may be provided in Motorola data sheets and/or specifications can and do vary in different applications and actual performance may vary over time. All operating parameters, including “Typicals” must be validated for each customer application by customer’s technical experts. Motorola does not convey any license under its patent rights nor the rights of others. Motorola products are not designed, intended, or authorized for use as components in systems intended for surgical implant into the body, or other applications intended to support or sustain life, or for any other application in which the failure of the Motorola product could create a situation where personal injury or death may occur. Should Buyer purchase or use Motorola products for any such unintended or unauthorized application, Buyer shall indemnify and hold Motorola and its officers, employees, subsidiaries, affiliates, and distributors harmless against all claims, costs, damages, and expenses, and reasonable attorney fees arising out of, directly or indirectly, any claim of personal injury or death associated with such unintended or unauthorized use, even if such claim alleges that Motorola was negligent regarding the design or manufacture of the part. Motorola and Ⓜ are registered trademarks of Motorola, Inc. Motorola, Inc. is an Equal Opportunity/Affirmative Action Employer.

How to reach us:
USA/EUROPE/Locations Not Listed: Motorola Literature Distribution;
P.O. Box 20912; Phoenix, Arizona 85036. 1–800–441–2447 or 602–303–5454

MFAX: RMFAX0@email.sps.mot.com – TOUCHTONE 602–244–6609
INTERNET: http://Design–NET.com

JAPAN: Nippon Motorola Ltd.; Tatsumi–SPD–JLDC, 6F Seibu–Butsuryu–Center,
3–14–2 Tatsumi Koto–Ku, Tokyo 135, Japan. 03–81–3521–8315

ASIA/PACIFIC: Motorola Semiconductors H.K. Ltd.; 8B Tai Ping Industrial Park,
51 Ting Kok Road, Tai Po, N.T., Hong Kong. 852–26629298