查询LTC1702CGN供应商 捷多邦，专业PCB打样工厂，24小时加急出货

LINEAR TECHNOLOGY

LTC1702

Dual 550kHz Synchronous 2-Phase Switching Regulator Controller

FEATURES

- Two Independent Controllers in One Package
- **Two Sides Run Out-of-Phase to Minimize C_{IN}**
- All N-Channel External MOSFET Architecture
- **No External Current Sense Resistors**
- **Excellent Output Regulation: 1% Total Output Accuracy**
- 550kHz Switching Frequency Minimizes External Component Size
- 1A to 25A Output Current per Channel
- High Efficiency over Wide Load Current Range
- Quiescent Current Drops Below 100µA in Shutdown
- Small 24-Pin Narrow SSOP Package

APPLICATIONS

- Microprocessor Core and I/O Supplies
- Multiple Logic Supply Generator
- Distributed Power Applications
- High Efficiency Power Conversion

LT, LTC and LT are registered trademarks of Linear Technology Corporation.
Burst Mode is a trademark of Linear Technology Corporation.

DESCRIPTION

The LTC®1702 is a dual switching regulator controller optimized for high efficiency with low input voltages. It includes two complete, on-chip, independent switching regulator controllers each designed to drive a pair of external N-channel MOSFET devices in a voltage mode feedback, synchronous buck configuration. The LTC1702 uses a constant-frequency, true PWM design switching at 550kHz, minimizing external component size and cost and maximizing load transient performance. The synchronous buck architecture automatically shifts to discontinuous and then to Burst Mode™ operation as the output load decreases, ensuring maximum efficiency over a wide range of load currents.

The LTC1702 features an onboard reference trimmed to 0.5% and can provide better than 1% regulation at the converter outputs. Open-drain logic outputs indicate whether either output has risen to within 5% of the final output voltage and an optional latching FAULT mode protects the load if the output rises 15% above the intended voltage. Each channel can be enabled independently; with both channels disabled, the LTC1702 shuts down and supply current drops below 100µA.

TYPICAL APPLICATION

Dual Output High Power 3.3V/2.5V Logic Supply

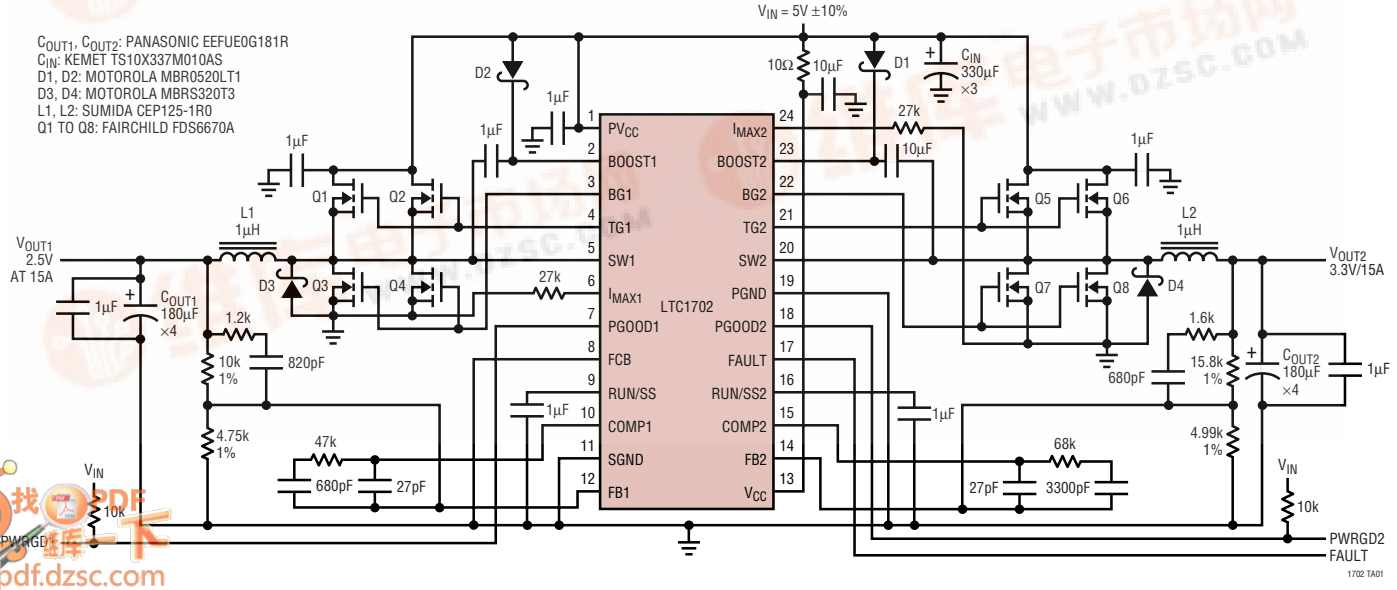

ABSOLUTE MAXIMUM RATINGS

(Note 1)

Supply Voltage
- V_{CC} 7V
- BOOST*n* 15V
- BOOST*n* – SW*n* 7V

Input Voltage
- SW*n* ..... –1V to 8V
- All Other Inputs ..... –0.3V to V_{CC} + 0.3V

Peak Output Current < 10µs
- TG*n*, BG*n* 5A

Operating Temperature Range
- LTC1702C ..... 0°C to 70°C
- LTC1702I ..... –40°C to 85°C

Storage Temperature Range ..... –65°C to 150°C

Lead Temperature (Soldering, 10 sec) ..... 300°C

PACKAGE/ORDER INFORMATION

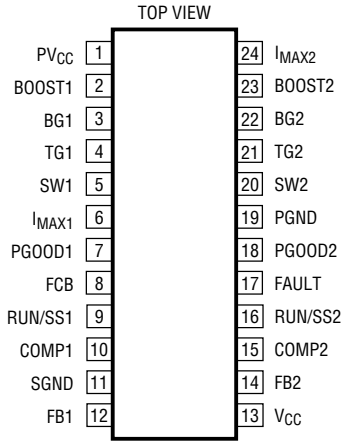

GN PACKAGE
24-LEAD NARROW PLASTIC SSOP

T_{JMAX} = 125°C, θ_{JA} = 100°C/W

ORDER PART NUMBER
LTC1702CGN LTC1702IGN

Consult factory for Military grade parts.

ELECTRICAL CHARACTERISTICS

The ● denotes specifications which apply over the full operating temperature range, otherwise specifications are T_A = 25°C. V_{CC} = 5V unless otherwise specified. (Note 3)

SYMBOL	PARAMETER	CONDITIONS		MIN	TYP	MAX	UNITS
Main Control Loop							
V_{CC}	V_{CC} Supply Voltage		●	3		7	V
PV_{CC}	PV_{CC} Supply Voltage	(Note 2)	●	3		7	V
BV_{CC}	BOOST Pin Voltage	$V_{BOOST} – V_{SW}$ (Note 2)	●	2.7		7	V
I_{CC}	V_{CC} Supply Current	Test Circuit 1, C_L = 0pF RUN/SS1 = RUN/SS2 = 0V (Note 5)	● ●		2.2 30	8 100	mA µA
IPV_{CC}	PV_{CC} Supply Current	Test Circuit 1, C_L = 0pF (Note 4) RUN/SS1 = RUN/SS2 = 0V (Note 5)	● ●		2.2 6	6 100	mA µA
I_{BOOST}	BOOST Pin Current	Test Circuit 1, C_L = 0pF (Note 4) RUN/SS1 = RUN/SS2 = 0V	● ●		1.3 0.1	3 10	mA µA
V_{FB}	Feedback Voltage	Test Circuit 1, C_L = 0pF, LTC1702C Test Circuit 1, C_L = 0pF, LTC1702I	● ●	0.792 0.790	0.800 0.800	0.808 0.810	V V
ΔV_{FB}	Feedback Voltage Line Regulation	V_{CC} = 3V to 7V	●		±0.005	±0.05	%/V
I_{FB}	Feedback Current		●		±0.001	±1	µA
ΔV_{OUT}	Output Voltage Load Regulation	(Note 6)	●		0.1	±0.2	%
V_{FCB}	FCB Threshold		●	0.75	0.8	0.85	V
ΔV_{FCB}	FCB Feedback Hysteresis				20		mV
I_{FCB}	FCB Pin Current		●		±0.001	±1	µA
V_{RUN}	RUN/SS Pin RUN Threshold		●	0.45	0.55	0.65	V
I_{SS}	Soft-Start Source Current	RUN/SS*n* = 0V		–2	–3.5	–6	µA

ELECTRICAL CHARACTERISTICS

The ● denotes specifications which apply over the full operating temperature range, otherwise specifications are T_A = 25°C. V_{CC} = 5V unless otherwise specified. (Note 3)

SYMBOL	PARAMETER	CONDITIONS		MIN	TYP	MAX	UNITS
Switching Characteristics							
f_{OSC}	Oscillator Frequency	Test Circuit 1, C_L = 0pF	●	475	550	750	kHz
Φ_{OSC2}	Converter 2 Oscillator Phase	Relative to Converter 1 (Note 6)			180		DEG
DC_{MIN1}	Minimum Duty Cycle	$V_{FB} < V_{MAX}$	●	7	10		%
DC_{MIN2}	Minimum Duty Cycle	$V_{FB} > V_{MAX}$	●	0			%
DC_{MAX}	Maximum Duty Cycle		●	87	90	93	%
t_{NOV}	Driver Nonoverlap	Test Circuit 1, C_L = 2000pF (Note 7)	●		40	100	ns
t_r, t_f	Driver Rise/Fall Time	Test Circuit 1, C_L = 2000pF (Note 7)	●		12	80	ns
Feedback Amplifier							
A_{VFB}	FB DC Gain		●	74	85		dB
GBW	FB Gain Bandwidth				25		MHz
I_{ERR}	FB Sink/Source Current		●	±3	±10		mA
V_{MIN}	MIN Comparator Threshold		●		760	785	mV
V_{MAX}	MAX Comparator Threshold		●	815	840		mV
Current Limit Loop							
A_{VILIM}	I_{LIM} Gain				40		dB
I_{IMAX}	I_{MAX} Source Current	I_{MAX} = 0V, LTC1702C I_{MAX} = 0V, LTC1702I	● ●	–7 –7	–10 –10	–13 –14	µA µA
Status Outputs							
V_{PGOOD}	PGOOD Trip Point	V_{FB} Relative to Regulated V_{OUT}	●	–10	–5	–2	%
V_{OLPG}	PGOOD Output Low Voltage	PGOOD = 1mA	●		0.03	0.1	V
I_{PGOOD}	PGOOD Output Leakage		●		±0.1	±1	µA
t_{PGOOD}	PGOOD Delay Time	$V_{FB} < V_{PGOOD}$ to PGOOD ↓ (Note 7)			100		µs
V_{FAULT}	FAULT Trip Point	V_{FB} Relative to Regulated V_{OUT}	●	+10	+15	+20	%
V_{OLF}	FAULT Output Low Voltage	I_{FAULT} = 1mA	●		0.03	0.1	V
I_{FAULT}	FAULT Output Current	V_{FAULT} = 0V			–10		µA
t_{FAULT}	FAULT Delay Time	$V_{FB} > V_{FAULT}$ to FAULT ↑ (Note 7)			25		µs

Note 1: Absolute Maximum Ratings are those values beyond which the life of a device may be impaired.

Note 2: PV_{CC} and BV_{CC} ($V_{BOOST} – V_{SW}$) must be greater than $V_{GS(ON)}$ of the external MOSFETs used to ensure proper operation.

Note 3: All currents into device pins are positive; all currents out of device pins are negative. All voltages are referenced to ground unless otherwise specified.

Note 4: Supply current in normal operation is dominated by the current needed to charge and discharge the external MOSFET gates. This current will vary with supply voltage and the external MOSFETs used.

Note 5: Supply current in shutdown is dominated by external MOSFET leakage and may be significantly higher than the quiescent current drawn by the LTC1702, especially at elevated temperature.

Note 6: This parameter is guaranteed by correlation and is not tested directly.

Note 7: Rise and fall times are measured using 10% and 90% levels. Delay and nonoverlap times are measured using 50% levels.

TYPICAL PERFORMANCE CHARACTERISTICS

Efficiency vs Load Current

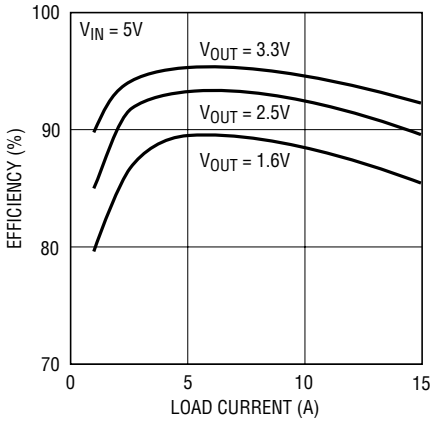

Transient Response

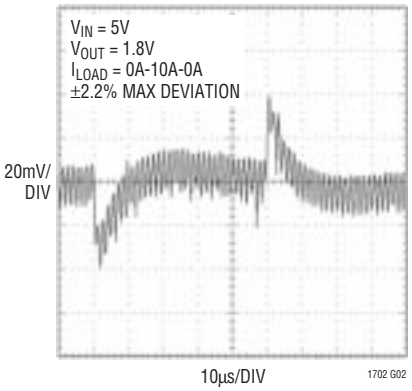

MOSFET Driver Supply Current vs Gate Capacitance

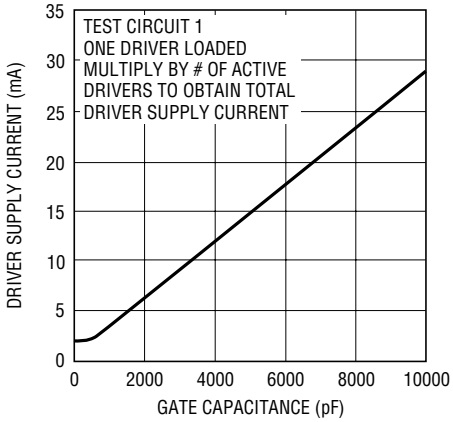

Supply Current vs Temperature

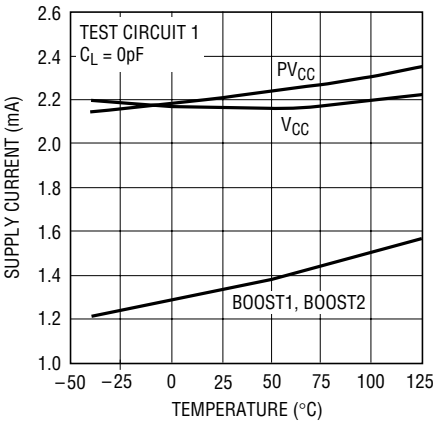

Normalized Frequency vs Temperature

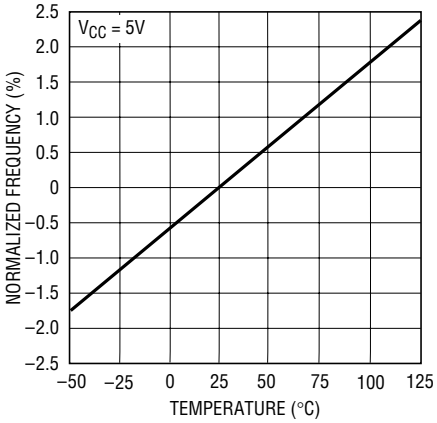

Driver R_{ON} vs Temperature

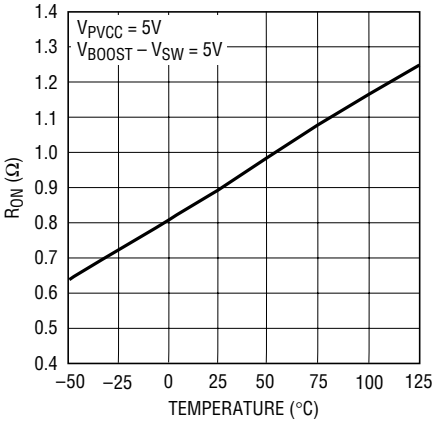

RUN/SS Source Current vs Temperature

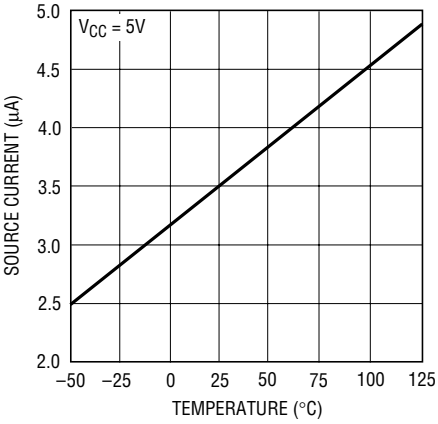

Nonoverlap Time vs Temperature

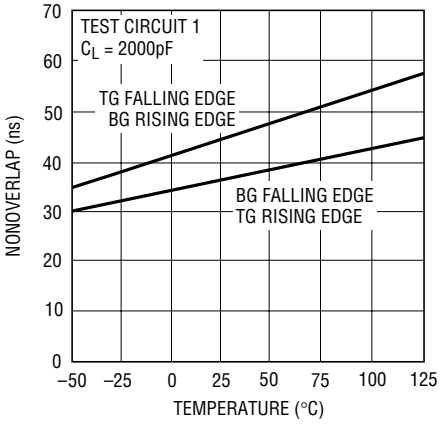

Driver Rise/Fall vs Temperature

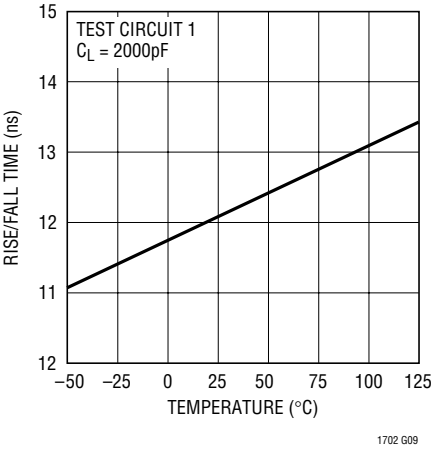

PIN FUNCTIONS

PV_{CC} (Pin 1): Driver Power Supply Input. PV_{CC} provides power to the two BG*n* output drivers. PV_{CC} must be connected to a voltage high enough to fully turn on the external MOSFETs QB1 and QB2. PV_{CC} should generally be connected directly to V_{IN}. PV_{CC} requires at least a 1µF bypass capacitor directly to PGND.

BOOST1 (Pin 2): Controller 1 Top Gate Driver Supply. The BOOST1 pin supplies power to the floating TG1 driver. BOOST1 should be bypassed to SW1 with a 1µF capacitor. An additional Schottky diode from V_{IN} to BOOST1 pin will create a complete floating charge-pumped supply at BOOST1. No other external supplies are required.

BG1 (Pin 3): Controller 1 Bottom Gate Drive. The BG1 pin drives the gate of the bottom N-channel synchronous switch MOSFET, QB1. BG1 is designed to drive up to 10,000pF of gate capacitance directly. If RUN/SS1 goes low, BG1 will go low, turning off QB1. If FAULT mode is tripped, BG1 will go high and stay high, keeping QB1 on until the power is cycled.

TG1 (Pin 4): Controller 1 Top Gate Drive. The TG1 pin drives the gate of the top N-channel MOSFET, QT1. The TG1 driver draws power from the BOOST1 pin and returns to the SW1 pin, providing true floating drive to QT1. TG1 is designed to drive up to 10,000pF of gate capacitance directly. In shutdown or fault modes, TG1 will go low.

SW1 (Pin 5): Controller 1 Switching Node. SW1 should be connected to the switching node of converter 1. The TG1 driver ground returns to SW1, providing floating gate drive to the top N-channel MOSFET switch, QT1. The voltage at SW1 is compared to I_{MAX1} by the current limit comparator while the bottom MOSFET, QB1, is on.

I_{MAX1} (Pin 6): Controller 1 Current Limit Set. The I_{MAX1} pin sets the current limit comparator threshold for controller 1. If the voltage drop across the bottom MOSFET, QB1, exceeds the magnitude of the voltage at I_{MAX1}, controller 1 will go into current limit. The I_{MAX1} pin has an internal 10µA current source pull-up, allowing the current threshold to be set with a single external resistor to PGND. See the Current Limit Programming section for more information on choosing R_{IMAX}.

PGOOD1 (Pin 7): Controller 1 Power Good. PGOOD1 is an open-drain logic output. PGOOD1 will pull low whenever FB1 falls 5% below its programmed value. When RUN/SS1 is low (side 1 shut down), PGOOD1 will go high.

FCB (Pin 8): Force Continuous Bar. The FCB pin forces both converters to maintain continuous synchronous operation regardless of load when the voltage at FCB drops below 0.8V. FCB is normally tied to V_{CC}. To force continuous operation, tie FCB to SGND. FCB can also be connected to a feedback resistor divider from a secondary winding on one converter's inductor to generate a third regulated output voltage. Do not leave FCB floating.

RUN/SS1 (Pin 9): Controller 1 Run/Soft-start. Pulling RUN/SS1 to SGND will disable controller 1 and turn off both of its external MOSFET switches. Pulling both RUN/SS pins down will shut down the entire LTC1702, dropping the quiescent supply current below 100µA. A capacitor from RUN/SS1 to SGND will control the turn-on time and rate of rise of the controller 1 output voltage at power-up. An internal 3.5µA current source pull-up at RUN/SS1 pin sets the turn-on time at approximately 500ms/µF.

COMP1 (Pin 10): Controller 1 Loop Compensation. The COMP1 pin is connected directly to the output of the first controller's error amplifier and the input to the PWM comparator. An RC network is used at the COMP1 pin to compensate the feedback loop for optimum transient response.

SGND (Pin 11): Signal Ground. All internal low power circuitry returns to the SGND pin. Connect to a low impedance ground, separated from the PGND node. All feedback, compensation and soft-start connections should return to SGND. SGND and PGND should connect only at a single point, near the PGND pin and the negative plate of the C_{IN} bypass capacitor.

FB1 (Pin 12): Controller 1 Feedback Input. FB1 should be connected through a resistor network to V_{OUT1} to set the output voltage. The loop compensation network for controller 1 also connects to FB1.

V_{CC} (Pin 13): Power Supply Input. All internal circuits except the output drivers are powered from this pin. V_{CC} should be connected to a low noise power supply voltage between 3V and 7V and should be bypassed to SGND with at least a 1µF capacitor in close proximity to the LTC1702.

PIN FUNCTIONS

FB2 (Pin 14): Controller 2 Feedback Input. See FB1.

COMP2 (Pin 15): Controller 2 Loop Compensation. See COMP1.

RUN/SS2 (Pin 16): Controller 2 Run/Soft-start. See RUN/SS1.

FAULT (Pin 17): Output Overvoltage Fault (Latched). The FAULT pin is an open-drain output with an internal 10μA pull-up. If either regulated output voltage rises more than 15% above its programmed value for more than 25μs, the FAULT output will go high and the entire LTC1702 will be disabled. When FAULT is high, both BG pins will go high, turning on the bottom MOSFET switches and pulling down the high output voltage. The LTC1702 will remain latched in this state until the power is cycled. When FAULT mode is active, the FAULT pin will be pulled up with an internal 10μA current source. Tying FAULT directly to PGND will disable latched FAULT mode and will allow the LTC1702 to resume normal operation when the overvoltage fault is removed.

PGOOD2 (Pin 18): Controller 2 Power Good. See PGOOD1.

PGND (Pin 19): Power Ground. The BG*n* drivers return to this pin. Connect PGND to a high current ground node in close proximity to the sources of external MOSFETs, QB1 and QB2, and the V_{IN} and V_{OUT} bypass capacitors.

SW2 (Pin 20): Controller 2 Switching Node. See SW1.

TG2 (Pin 21): Controller 2 Top Gate Drive. See TG1.

BG2 (Pin 22): Controller 2 Bottom Gate Drive. See BG1.

BOOST2 (Pin 23): Controller 2 Top Gate Driver Supply. See BOOST1.

I_{MAX2} (Pin 24): Controller 2 Current Limit Set. See I_{MAX1}.

BLOCK DIAGRAM

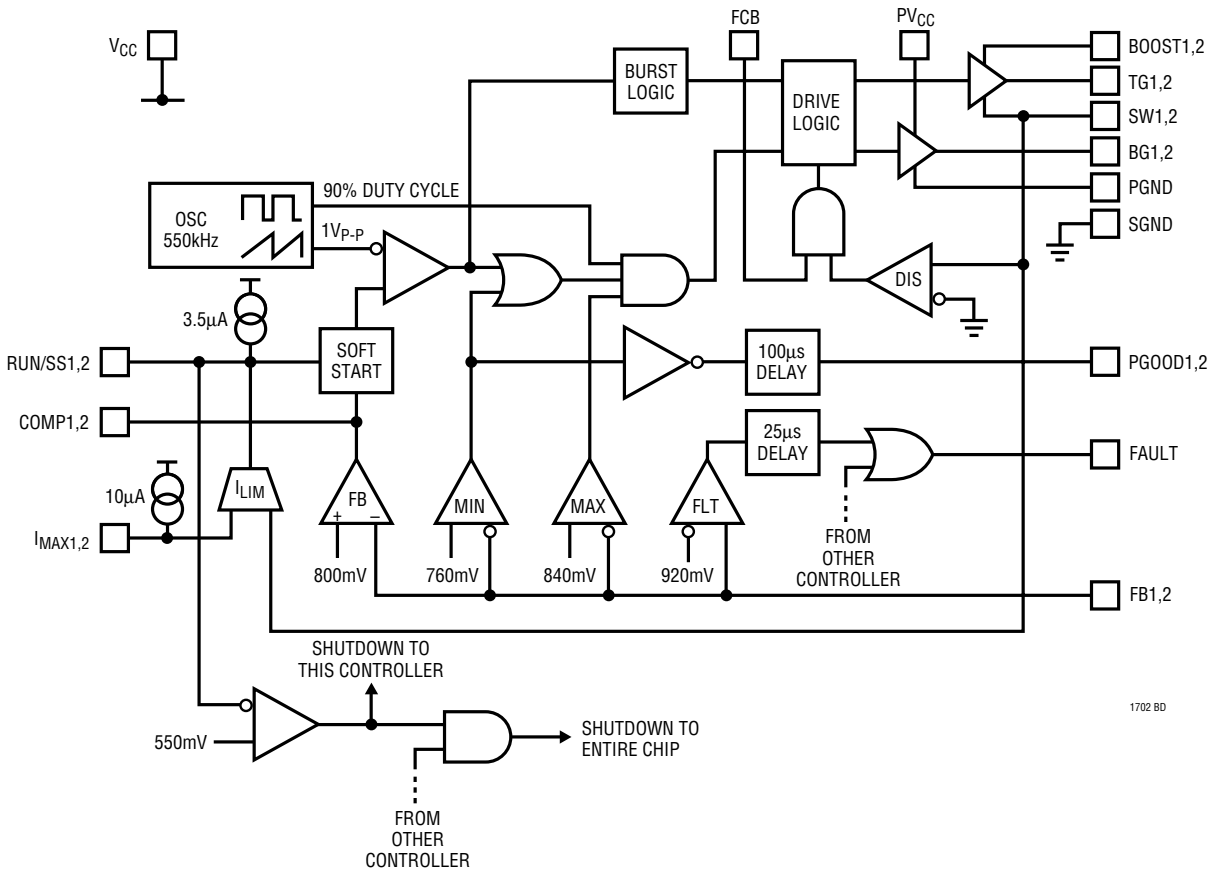

TEST CIRCUIT

Test Circuit 1

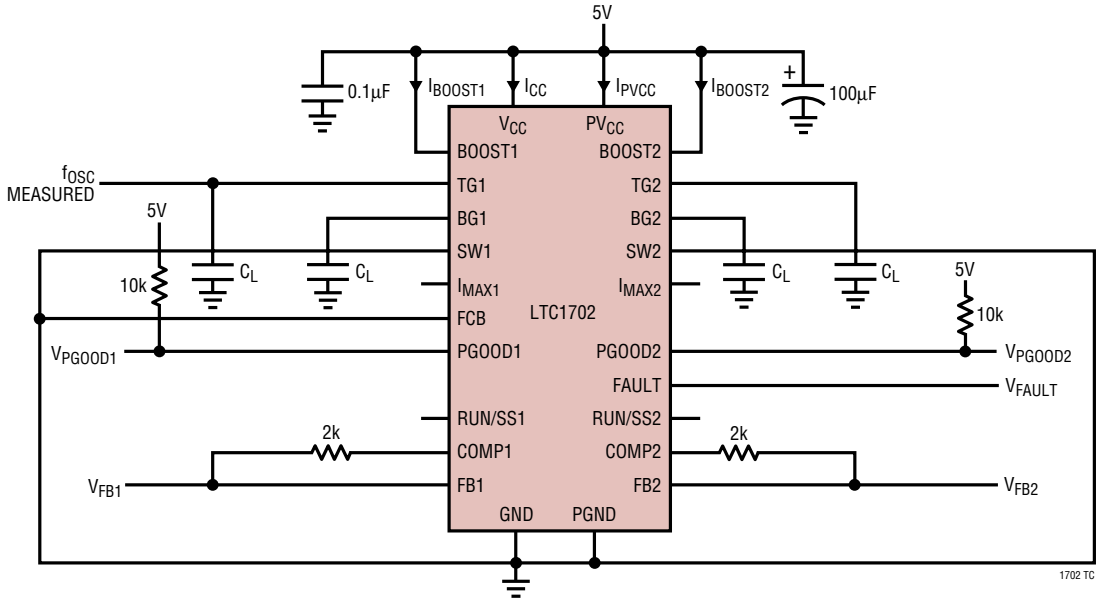

APPLICATIONS INFORMATION

OVERVIEW

The LTC1702 is a dual, step-down (buck), voltage mode feedback switching regulator controller. It is designed to be used in a synchronous switching architecture with two external N-channel MOSFETs per channel. It is intended to operate from a low voltage input supply (7V maximum) and provide a high power, high efficiency, precisely regulated output voltage. Several features make it particularly suited for microprocessor supply regulation. Output regulation is extremely tight, with DC line and load regulation and initial accuracy better than 1%, and total regulation including transient response inside of 3% with a properly designed circuit. The 550kHz switching frequency allows the use of physically small, low value external components without compromising performance.

The LTC1702's internal feedback amplifier is a 25MHz gain-bandwidth op amp, allowing the use of complex multipole/zero compensation networks. This allows the feedback loop to maintain acceptable phase margin at higher frequencies than traditional switching regulator controllers allow, improving stability and maximizing transient response. The 800mV internal reference allows regulated output voltages as low as 800mV without external level shifting amplifiers.

The LTC1702's synchronous switching logic transitions automatically into Burst Mode operation, maximizing efficiency with light loads. Onboard power-good and overvoltage (OV) fault flags indicate when the output is in regulation or an OV fault has occurred. The OV flag can be set to latch the device off when an OV fault has occurred, or to automatically resume operation when the fault is removed.

The LTC1702 takes a low input voltage and generates two lower output voltages at very high currents. Its strengths are small size, unmatched regulation and transient response and high efficiency. This combination makes it ideal for providing multiple low voltage logic supplies to microprocessors or high density ASICs in systems using a "2-step" regulation architecture, used in portable and advanced desktop computers.

APPLICATIONS INFORMATION

2-Step Conversion

"2-step" architectures use a primary regulator to convert the input power source (batteries or AC line voltage) to an intermediate supply voltage, often 5V. This intermediate voltage is then converted to the low voltage, high current supplies required by the system using a secondary regulator—the LTC1702. 2-step conversion eliminates the need for a single converter that converts a high input voltage to a very low output voltage, often an awkward design challenge. It also fits naturally into systems that continue to use the 5V supply to power portions of their circuitry, or have excess 5V capacity available as newer circuit designs shift the current load to lower voltage supplies.

Each regulator in a typical 2-step system maintains a relatively low step-down ratio (5:1 or less), running at high efficiency while maintaining a reasonable duty cycle. In contrast, a regulator taking a single step from a high input voltage to a 1.xV or 2.xV output must run at a very narrow duty cycle, mandating trade-offs in external component values and compromising efficiency and transient response. The efficiency loss can exceed that of using a 2-step solution (see the 2-Step Efficiency Calculation section and Figure 10). Further complicating the calculation is the fact that many systems draw a significant fraction of their total power off the intermediate 5V supply, bypassing the low voltage supply. 2-step solutions using the LTC1702 usually match or exceed the total system efficiency of single-step solutions, and provide the additional benefits of improved transient response, reduced PCB area and simplified power trace routing.

2-step regulation can buy advantages in thermal management as well. Power dissipation in the LTC1702 portion of a 2-step circuit is lower than it would be in a typical 1-step converter, even in cases where the 1-step converter has higher total efficiency than the 2-step system. In a typical microprocessor core supply regulator, for example, the regulator is usually located right next to the CPU. In a 1-step design, all of the power dissipated by the core regulator is right there next to the hot CPU, aggravating thermal management. In a 2-step LTC1702 design, a significant percentage of the power lost in the core regulation system happens in the 5V supply, which is usually located away from the CPU. The power lost to heat in the LTC1702 section of the system is relatively low, minimizing the added heat near the CPU.

See the Optimizing Performance section for a detailed explanation of how to calculate system efficiency.

2-Phase Operation

The LTC1702 dual switching regulator controller also features the considerable benefits of 2-phase operation. Notebook computers, hand-held terminals and automotive electronics all benefit from the lower input filtering requirement, reduced electromagnetic interference (EMI) and increased efficiency associated with 2-phase operation.

Why the need for 2-phase operation? Up until the LTC1702, constant-frequency dual switching regulators operated both channels in phase (i.e., single-phase operation). This means that both topside MOSFETs turned on at the same time, causing current pulses of up to twice the amplitude of those for one regulator to be drawn from the input capacitor. These large amplitude current pulses increased the total RMS current flowing from the input capacitor, requiring the use of more expensive input capacitors and increasing both EMI and losses in the input capacitor and input power supply.

With 2-phase operation, the two channels of the LTC1702 are operated 180 degrees out of phase. This effectively interleaves the current pulses coming from the switches, greatly reducing the overlap time where they add together. The result is a significant reduction in total RMS input current, which in turn allows less expensive input capacitors to be used, reduces shielding requirements for EMI and improves real world operating efficiency.

Figure 7 shows example waveforms for a single switching regulator channel versus a 2-phase LTC1702 system with both sides switching. A single-phase dual regulator with both sides operating would exhibit double the single side numbers. In this example, 2-phase operation reduced the RMS input current from $9.3A_{RMS}$ ($2 \times 4.66A_{RMS}$) to $4.8A_{RMS}$. While this is an impressive reduction in itself,

APPLICATIONS INFORMATION

remember that the power losses are proportional to I_{RMS}^2, meaning that the actual power wasted is reduced by a factor of 3.75. The reduced input ripple voltage also means less power is lost in the input power path, which could include batteries, switches, trace/connector resistances and protection circuitry. Improvements in both conducted and radiated EMI also directly accrue as a result of the reduced RMS input current and voltage.

Small Footprint

The LTC1702 operates at a 550kHz switching frequency, allowing it to use low value inductors without generating excessive ripple currents. Because the inductor stores less energy per cycle, the physical size of the inductor can be reduced without risking core saturation, saving PCB board space. The high operating frequency also means less energy is stored in the output capacitors between cycles, minimizing their required value and size. The remaining components, including the 150mil SSOP-24 LTC1702, are tiny, allowing an entire dual-output LTC1702 circuit to be constructed in 1.5in^2 of PCB space. Further, this space is generally located right next to the microprocessor or in some similarly congested area, where PCB real estate is at a premium. The fact that the LTC1702 runs off the 5V supply, often available from a power plane, is an added benefit in portable systems — it does not require a dedicated supply line running from the battery.

Fast Transient Response

The LTC1702 uses a fast 25MHz GBW op amp as an error amplifier. This allows the compensation network to be designed with several poles and zeros in a more flexible configuration than with a typical g_m feedback amplifier. The high bandwidth of the amplifier, coupled with the high switching frequency and the low values of the external inductor and output capacitor, allow very high loop crossover frequencies. The low inductor value is the other half of the equation—with a typical value on the order of 1μH, the inductor allows very fast di/dt slew rates. The result is superior transient response compared with conventional solutions.

High Efficiency

The LTC1702 uses a synchronous step-down (buck) architecture, with two external N-channel MOSFETs per output. A floating topside driver and a simple external charge pump provide full gate drive to the upper MOSFET. The voltage mode feedback loop and MOSFET V_{DS} current limit sensing remove the need for an external current sense resistor, eliminating an external component and a source of power loss in the high current path. Properly designed circuits using low gate charge MOSFETs are capable of efficiencies exceeding 90% over a wide range of output voltages.

ARCHITECTURE DETAILS

The LTC1702 dual switching regulator controller includes two identical, independent regulator channels. The two sides of the chip and their corresponding external components act independently of each other with the exception of the common input bypass capacitor and the FCB and FAULT pins, which affect both channels. In the following discussions, when a pin is referred to without mentioning which side is involved, that discussion applies equally to both sides.

Switching Architecture

Each half of the LTC1702 is designed to operate as a synchronous buck converter (Figure 1). Each channel includes two high power MOSFET gate drivers to control external N-channel MOSFETs QT and QB. These drivers have 0.5Ω output impedances and can carry well over an

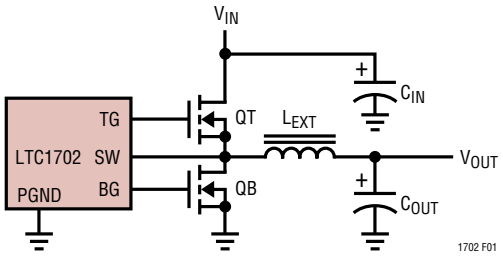

Figure 1. Synchronous Buck Architecture

APPLICATIONS INFORMATION

amp of continuous current with peak currents up to 5A to slew large MOSFET gates quickly. The external MOSFETs are connected with the drain of QT attached to the input supply and the source of QT at the switching node SW. QB is the synchronous rectifier with its drain at SW and its source at PGND. SW is connected to one end of the inductor, with the other end connected to V_{OUT}. The output capacitor is connected from V_{OUT} to PGND.

When a switching cycle begins, QB is turned off and QT is turned on. SW rises almost immediately to V_{IN} and the inductor current begins to increase. When the PWM pulse finishes, QT turns off and one nonoverlap interval later, QB turns on. Now SW drops to PGND and the inductor current decreases. The cycle repeats with the next tick of the master clock. The percentage of time spent in each mode is controlled by the duty cycle of the PWM signal, which in turn is controlled by the feedback amplifier. The master clock generates a $1V_{P-P}$, 550kHz sawtooth waveform and turns QT once every 1.8µs. In a typical application with a 5V input and a 1.6V output, the duty cycle will be set at 1.6/5 × 100% or 32% by the feedback loop. This will give roughly a 575ns on-time for QT and a 1.22µs on-time for QB.

This constant frequency operation brings with it a couple of benefits. Inductor and capacitor values can be chosen with a precise operating frequency in mind and the feedback loop components can be similarly tightly specified. Noise generated by the circuit will always be in a known frequency band with the 550kHz frequency designed to leave the 455kHz IF band free of interference. Subharmonic oscillation and slope compensation, common headaches with constant frequency current mode switchers, are absent in voltage mode designs like the LTC1702.

During the time that QT is on, its source (the SW pin) is at V_{IN}. V_{IN} is also the power supply for the LTC1702. However, QT requires $V_{IN} + V_{GS(ON)}$ at its gate to achieve minimum R_{ON}. This presents a problem for the LTC1702—it needs to generate a gate drive signal at TG higher than its highest supply voltage. To get around this, the TG driver runs from floating supplies, with its negative supply attached to SW and its power supply at BOOST. This allows it to slew up and down with the source of QT. In combination with a simple external charge pump (Figure 2), this allows the LTC1702 to completely enhance the gate of QT without requiring an additional, higher supply voltage.

The two channels of the LTC1702 run from a common clock, with the phasing chosen to be 180° from side 1 to side 2. This has the effect of doubling the frequency of the switching pulses seen by the input bypass capacitor, significantly lowering the RMS current seen by the capacitor and reducing the value required (see the 2-Phase section).

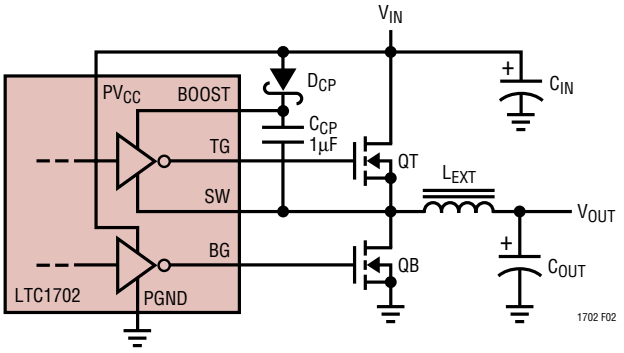

Figure 2. Floating TG Driver Supply

Feedback Amplifier

Each side of the LTC1702 senses the output voltage at V_{OUT} with an internal feedback op amp (see Block Diagram). This is a real op amp with a low impedance output, 85dB open-loop gain and 25MHz gain-bandwidth product. The positive input is connected internally to an 800mV reference, while the negative input is connected to the FB pin. The output is connected to COMP, which is in turn connected to the soft-start circuitry and from there to the PWM generator.

Unlike many regulators that use a resistor divider connected to a high impedance feedback input, the LTC1702 is designed to use an inverting summing amplifier topology with the FB pin configured as a virtual ground. This allows flexibility in choosing pole and zero locations not available with simple g_m configurations. In particular, it allows the use of "type 3" compensation, which provides a phase boost at the LC pole frequency and significantly

APPLICATIONS INFORMATION

improves loop phase margin (see Figure 3). The Feedback Loop/Compensation section contains a detailed explanation of type 3 feedback loops.

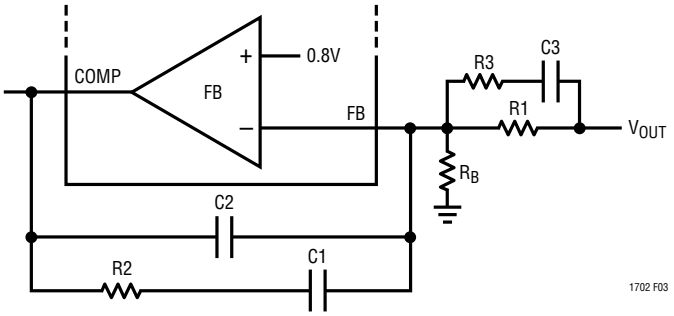

Figure 3. "Type 3" Feedback Loop

MIN/MAX

Two additional feedback loops keep an eye on the primary feedback amplifier and step in if the feedback node moves ±5% from its nominal 800mV value. The MAX comparator (see Block Diagram) activates whenever FB rises more than 5% above 800mV. It immediately turns the top MOSFET (QT) off and the bottom MOSFET (QB) on and keeps them that way until FB falls back within 5%. This pulls the output down as fast as possible, preventing damage to the (often expensive) load. If FB rises because the output is shorted to a higher supply, QB will stay on until the short goes away, the higher supply current limits or QB dies trying to save the load. This behavior provides maximum protection against overvoltage faults at the output, while allowing the circuit to resume normal operation when the fault is removed. The overvoltage protection circuit can optionally be set to latch the output off permanently (see the Overvoltage Fault section).

The MIN comparator (see Block Diagram) trips whenever FB is more than 5% below 800mV and immediately forces the switch duty cycle to 90% to bring the output voltage back into range. It releases when FB is within the 5% window. MIN is disabled when the soft-start or current limit circuits are active—the only two times that the output should legitimately be below its regulated value.

Notice that the FB pin is the virtual ground node of the feedback amplifier. A typical compensation network does not include local DC feedback around the amplifier, so that the DC level at FB will be an accurate replica of the output voltage, divided down by R1 and R_B (Figure 3). However, the compensation capacitors will tend to attenuate AC signals at FB, especially with low bandwidth type 1 feedback loops. This creates a situation where the MIN and MAX comparators do not respond immediately to shifts in the output voltage, since they monitor the output at FB. Maximizing feedback loop bandwidth will minimize these delays and allow MIN and MAX to operate properly. See the Feedback Loop/Compensation section.

PGOOD Flags

The MIN comparator performs another function; it drives the external "power good" pin (PGOOD) through a 100µs delay stage. PGOOD is an open-drain output, allowing it to be wire-OR'ed with other open-drain/open-collector signals. An external pull-up resistor is required for PGOOD to swing high. Any time the FB pin is more than 5% below the programmed value for more than 100µs, PGOOD will pull low, indicating that the output is out of regulation. PGOOD remains active during soft-start and current limit, even though the MIN comparator has no effect on the duty cycle during these times. The 100µs delay ensures that short output transient glitches that are successfully "caught" by the MIN comparator don't cause momentary glitches at the PGOOD pin. Note that the PGOOD pin only watches MIN, not MAX—it does not indicate if the output is 5% above the programmed value.

When either side of the LTC1702 is in shutdown, its associated PGOOD pin will go high. This behavior allows a valid PGOOD reading when the two PGOOD pins are tied together, even if one side is shut down. It also reduces quiescent current by eliminating the excess current drawn by the pull-up at the PGOOD pin. As soon as the RUN/SS pin rises above the shutdown threshold and the side comes out of shutdown, the PGOOD pin will pull low until the output voltage is valid. If both sides are shut down at the same time, both PGOOD pins will go high. To avoid confusion, if either side of the LTC1702 is shut down, the host system should ignore the associated PGOOD pin.

APPLICATIONS INFORMATION

SHUTDOWN/SOFT-START

Each half of the LTC1702 has a RUN/SS pin. The RUN/SS pins perform two functions: when pulled to ground, each shuts down its half of the LTC1702, and each acts as a conventional soft-start pin, enforcing a maximum duty cycle limit proportional to the voltage at RUN/SS. An internal 3.5μA current source pull-up is connected to each RUN/SS pin, allowing a soft-start ramp to be generated with a single external capacitor to ground. The 3.5μA current sources are active even when the LTC1702 is shut down, ensuring the device will start when any external pull-down at RUN/SS is released. Either side can be shut down without affecting the operation of the other side. If both sides are shut down at the same time, the LTC1702 goes into a micropower sleep mode, and quiescent current drops below 100μA. Entering sleep mode also resets the FAULT latch, if it was set.

Each RUN/SS pin shuts down its half of the LTC1702 when it falls below about 0.5V. Between 0.5V and about 1V, that half is active, but the maximum duty cycle is limited to 10%. The maximum duty cycle limit increases linearly between 1V and 2.5V, reaching its final value of 90% when RUN/SS is above 2.5V. Somewhere before this point, the feedback amplifier will assume control of the loop and the output will come into regulation. When RUN/SS rises to 0.5V below V_{CC}, the MIN feedback comparator is enabled, and the LTC1702 is in full operation (see Figure 4).

CURRENT LIMIT

The LTC1702 includes an onboard current limit circuit that limits the maximum output current to a user-programmed level. It works by sensing the voltage drop across QB during the time that QB is on and comparing that voltage to a user-programmed voltage at I_{MAX}. Since QB looks like a low value resistor during its on-time, the voltage drop across it is proportional to the current flowing in it. In a buck converter, the average current in the inductor is equal to the output current. This current also flows through QB during its on-time. Thus, by watching the voltage across QB, the LTC1702 can monitor the output current.

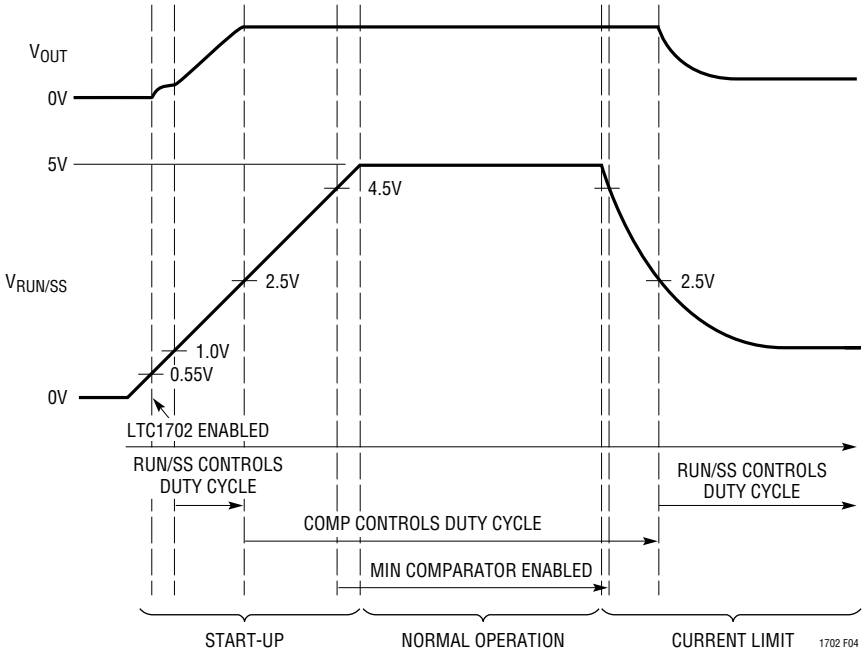

Figure 4. Soft-Start Operation in Start-Up and Current Limit

APPLICATIONS INFORMATION

Any time QB is on and the current flowing to the output is reasonably large, the SW node at the drain of QB will be somewhat negative with respect to PGND. The LTC1702 senses this voltage and inverts it to allow it to compare the sensed voltage with a positive voltage at the I_{MAX} pin. The I_{MAX} pin includes a trimmed 10μA pull-up, enabling the user to set the voltage at I_{MAX} with a single resistor, R_{IMAX}, to ground. The LTC1702 compares the two inputs and begins limiting the output current when the magnitude of the negative voltage at the SW pin is greater than the voltage at I_{MAX}.

The current limit detector is connected to an internal g_m amplifier that pulls a current from the RUN/SS pin proportional to the difference in voltage magnitudes between the SW and I_{MAX} pins. This current begins to discharge the soft-start capacitor at RUN/SS, reducing the duty cycle and controlling the output voltage until the current drops below the limit. The soft-start capacitor needs to move a fair amount before it has any effect on the duty cycle, adding a delay until the current limit takes effect (Figure 4). This allows the LTC1702 to experience brief overload conditions without affecting the output voltage regulation. The delay also acts as a pole in the current limit loop to enhance loop stability. Larger overloads cause the soft-start capacitor to pull down quickly, protecting the output components from damage. The current limit g_m amplifier includes a clamp to prevent it from pulling RUN/SS below 0.5V and shutting off the device.

Power MOSFET $R_{DS(ON)}$ varies from MOSFET to MOSFET, limiting the accuracy obtainable from the LTC1702 current limit loop. Additionally, ringing on the SW node due to parasitics can add to the apparent current, causing the loop to engage early. The LTC1702 current limit is designed primarily as a disaster prevention, “no blow up” circuit, and is not useful as a precision current regulator. It should typically be set around 50% above the maximum expected normal output current to prevent component tolerances from encroaching on the normal current range. See the Current Limit Programming section for advice on choosing a valve for R_{IMAX}.

DISCONTINUOUS/Burst Mode OPERATION

Theory of operation

The LTC1702 switching logic has three modes of operation. Under heavy loads, it operates as a fully synchronous, continuous conduction switching regulator. In this mode of operation (“continuous” mode), the current in the inductor flows in the positive direction (toward the output) during the entire switching cycle, constantly supplying current to the load. In this mode, the synchronous switch (QB) is on whenever QT is off, so the current always flows through a low impedance switch, minimizing voltage drop and power loss. This is the most efficient mode of operation at heavy loads, where the resistive losses in the power devices are the dominant loss term.

Continuous mode works efficiently when the load current is greater than half of the ripple current in the inductor. In a buck converter like the LTC1702, the average current in the inductor (averaged over one switching cycle) is equal to the load current. The ripple current is the difference between the maximum and the minimum current during a switching cycle (see Figure 5a). The ripple current depends on inductor value, clock frequency and output voltage, but is constant regardless of load as long as the LTC1702 remains in continuous mode. See the Inductor Selection section for a detailed description of ripple current.

As the output load current decreases in continuous mode, the average current in the inductor will reach a point where it drops below half the ripple current. At this point, the inductor current will reverse during a portion of the switching cycle, or begin to flow from the output back to the input. This does not adversely affect regulation, but does cause additional losses as a portion of the inductor current flows back and forth through the resistive power switches, giving away a little more power each time and lowering the efficiency. There are some benefits to allowing this reverse current flow: the circuit will maintain regulation even if the load current drops below zero (the load supplies current to the LTC1702) and the output

APPLICATIONS INFORMATION

ripple voltage and frequency remain constant at all loads, easing filtering requirements. Circuits that take advantage of this behavior can force the LTC1702 to operate in continuous mode at all loads by tying the FCB (Force Continuous Bar) pin to ground.

Discontinuous Mode

To minimize the efficiency loss due to reverse current flow at light loads, the LTC1702 switches to a second mode of operation: discontinuous mode (Figure 5b). In discontinuous mode, the LTC1702 detects when the inductor current approaches zero and turns off QB for the remainder of the switch cycle. During this time, the voltage at the SW pin will float about V_{OUT}, the voltage across the inductor will be zero, and the inductor current remains zero until the next switching cycle begins and QT turns on again. This prevents current from flowing backwards in QB, eliminating that power loss term. It also reduces the ripple current in the inductor as the output current approaches zero.

The LTC1702 detects that the inductor current has reached zero by monitoring the voltage at the SW pin while QB is on. Since QB acts like a resistor, SW should ideally be right at 0V when the inductor current reaches zero. In reality, the SW node will ring to some degree immediately after it is switched to ground by QB, causing some uncertainty as to the actual moment the average current in QB goes to zero. The LTC1702 minimizes this effect by ignoring the SW node for a fixed 50ns after QB turns on when the ringing is most severe, and by including a few millivolts offset in the comparator that monitors the SW node. Despite these precautions, some combinations of inductor and layout parasitics can cause the LTC1702 to enter discontinuous mode erratically. In many cases, the time that QB turns off will correspond to a peak in the ringing waveform at the SW pin (Figure 6). This erratic operation isn't pretty, but retains much of the efficiency benefit of discontinuous mode and maintains regulation at all times.

Burst Mode Operation

Discontinuous mode removes the resistive loss drop term in QB, but the LTC1702 is still switching QT and QB on and off once a cycle. Each time an external MOSFET is turned on, the internal driver must charge its gate to V_{CC}. Each time it is turned off, that charge is lost to ground. At the high switching frequencies that the LTC1702 operates at, the charge lost to the gates can add up to tens of milliamps from V_{CC}. As the load current continues to drop, this quickly become the dominant power loss term, reducing efficiency once again.

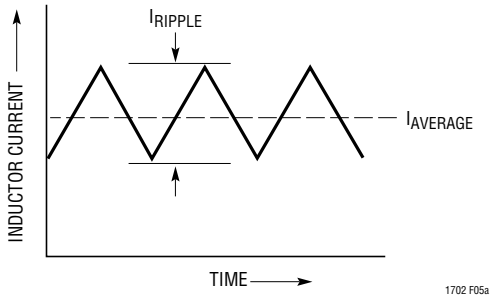

Figure 5a. Continuous Mode

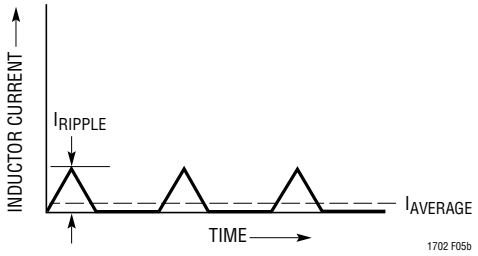

Figure 5b. Discontinuous Mode

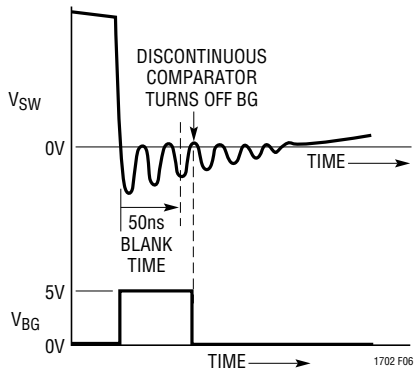

Figure 6. Ringing at SW Causes Discontinuous Comparator to Trip Early

APPLICATIONS INFORMATION

Once again, the LTC1702 switches to a new mode to minimize efficiency loss: Burst Mode operation. As the circuit goes deeper and deeper into discontinuous mode, the total time QT and QB are on reduces. However, the ratio of the time that QT is on to the time that QB is on must remain constant for the output to stay in regulation. An internal timer circuit forces QT to stay on for at least 10% of a normal switching cycle. When the load drops to the point that the output requires less than 10% on-time at QT, the output voltage will begin to rise. The LTC1702 senses this rise and shuts both QT and QB off completely, skipping several switching cycles until the output falls back into range. It then resumes switching in discontinuous mode with QT at 10% duty cycle and the burst sequence repeats. The total deviation from the regulated output is within the 1% regulation tolerance of the LTC1702.

In Burst Mode operation, both resistive loss and switching loss are minimized while keeping the output in regulation. The ripple current will be set by the 10% QT on-time and the input supply voltage and is the lowest of all three operating modes. As the load current falls to zero in Burst Mode operation, the most significant loss term becomes the 3mA quiescent current drawn by each side of the LTC1702—usually much less than the minimum load current in a typical low voltage logic system. Burst Mode operation maximizes efficiency at low load currents, but can cause low frequency ripple in the output voltage as the cycle-skipping circuitry switches on and off.

FCB Pin

In some circumstances, it is desirable to control or disable discontinuous and Burst Mode operations. The FCB (Force Continuous Bar) pin allows the user to do this. When the FCB pin is high, the LTC1702 is allowed to enter discontinuous and Burst Mode operations at either side as required. If FCB is taken low, discontinuous and Burst Mode operations are disabled and both sides of the LTC1702 run in continuous mode regardless of load. This does not affect output regulation but does reduce efficiency at low output currents. The FCB pin threshold is specified at 0.8V ±50mV, and includes 20mV of hysteresis, allowing it to be used as a precision small-signal comparator.

Paralleling Outputs

Synchronous regulators (like the LTC1702) are known for their bullheadedness when their outputs are paralleled with other regulators. In particular, a synchronous regulator paralleled with another regulator whose output is slightly higher (perhaps just by millivolts) will happily sink amps of current attempting to pull its own output back down to what it thinks is the right value.

The LTC1702 discontinuous mode allows it to be paralleled with another regulator without fighting. A typical system might use the LTC1702 as a primary regulator and a small LDO as a backup regulator to keep SRAM alive when the main power is off. When the LTC1702 is shut down (by pulling RUN/SS to ground), both QT and QB turn off and the output goes into a high impedance state, allowing the smaller regulator to support the output voltage. However, if the LTC1702 is powered back up in continuous mode, it will begin a soft-start cycle with a low duty cycle, pulling the output down and corrupting the data stored in SRAM. The solution is to tie FCB high, allowing the device to start in discontinuous mode. Any reverse current flow in QB will trip the discontinuous mode circuitry, preventing the LTC1702 from pulling down the output. The Typical Applications section shows an example of such a circuit.

OVERVOLTAGE FAULT

The LTC1702 includes a single overvoltage fault flag for both channels: FAULT. FAULT is an open-drain output with an internal 10μA pull-up. If either FB pin rises more than 15% above the nominal 800mV value for more than 25μs, the overvoltage comparator will trip, setting an internal latch. This latch releases the pull-down at FAULT, allowing the 10μA pull-up to take it high. When FAULT goes high, the LTC1702 stops all switching, turns both QB (bottom synchronous) MOSFETs on continuously and remains in this state until both RUN/SS pins are pulled low simultaneously, the power supply is recycled, or the FAULT pin is pulled low externally. This behavior is intended to protect a potentially expensive load from overvoltage damage at all costs. Under some conditions, this behavior can cause the output voltage to undershoot below ground. If latched

APPLICATIONS INFORMATION

FAULT mode is used, a Schottky diode should be added with its cathode at the output and its anode at ground to clamp the negative voltage to a safe level and prevent possible damage to the load and the output capacitors.

Note that in overvoltage conditions, the MAX comparator will kick in at just +5%, turning QB on continuously long before the output reaches +15%. Under most fault conditions, this is adequate to bring the output back down without firing the fault latch. Additionally, if MAX successfully keeps the output below +15%, the LTC1702 will resume normal regulation as soon as the output overvoltage fault is resolved.

In some circuits, the OV latch can be a liability. Consider a circuit where the output voltage at one channel may be changed on the fly by switching in different feedback resistors. A downward adjustment of greater than 15% will fire the fault latch, disabling both sides of the LTC1702 until the power is recycled. In circuits such as this, the fault latch can be disabled by grounding the FAULT pin. The internal latch will still be set the first time the output exceeds +15%, but the 10μA current source pull-up will not be able to pull FAULT high, and the LTC1702 will ignore the latch and continue normal operation. The MAX comparator will act as usual, turning on QB until output is within range and then allowing the loop to resume normal operation. FAULT can also be pulled down with external open-collector logic to restart a fault-latched LTC1702 as an alternative to recycling the power. Note that this will not reset the internal latch; if the external pull-down is released, the LTC1702 will reenter FAULT mode. To reset the latch, pull both RUN/SS pins low simultaneously or cycle the input power.

EXTERNAL COMPONENT SELECTION

POWER MOSFETs

Getting peak efficiency out of the LTC1702 depends strongly on the external MOSFETs used. The LTC1702 requires at least two external MOSFETs per side—more if one or more of the MOSFETs are paralleled to lower on-resistance. To work efficiently, these MOSFETs must exhibit low $R_{DS(ON)}$ at 5V V_{GS} (3.3V V_{GS} if the PV_{CC} input supply is 3.3V) to minimize resistive power loss while they are conducting current. They must also have low gate charge to minimize transition losses during switching. On the other hand, voltage breakdown requirements in a typical LTC1702 circuit are pretty tame: the 7V maximum input voltage limits the V_{DS} and V_{GS} the MOSFETs can see to safe levels for most devices.

Low $R_{DS(ON)}$

$R_{DS(ON)}$ calculations are pretty straightforward. $R_{DS(ON)}$ is the resistance from the drain to the source of the MOSFET when the gate is fully on. Many MOSFETs have $R_{DS(ON)}$ specified at 4.5V gate drive—this is the right number to use in LTC1702 circuits running from a 5V supply. As current flows through this resistance while the MOSFET is on, it generates I^2R watts of heat, where I is the current flowing (usually equal to the output current) and R is the MOSFET $R_{DS(ON)}$. This heat is only generated when the MOSFET is on. When it is off, the current is zero and the power lost is also zero (and the other MOSFET is busy losing power).

This lost power does two things: it subtracts from the power available at the output, costing efficiency, and it makes the MOSFET hotter—both bad things. The effect is worst at maximum load when the current in the MOSFETs and thus the power lost are at a maximum. Lowering $R_{DS(ON)}$ improves heavy load efficiency at the expense of additional gate charge (usually) and more cost (usually). Proper choice of MOSFET $R_{DS(ON)}$ becomes a trade-off between tolerable efficiency loss, power dissipation and cost. Note that while the lost power has a significant effect on system efficiency, it only adds up to a watt or two in a typical LTC1702 circuit, allowing the use of small, surface mount MOSFETs without heat sinks.

Gate Charge

Gate charge is amount of charge (essentially, the number of electrons) that the LTC1702 needs to put into the gate of an external MOSFET to turn it on. The easiest way to visualize gate charge is to think of it as a capacitance from the gate pin of the MOSFET to SW (for QT) or to PGND (for QB). This capacitance is composed of MOSFET channel

APPLICATIONS INFORMATION

charge, actual parasitic drain-source capacitance and Miller-multiplied gate-drain capacitance, but can be approximated as a single capacitance from gate to source. Regardless of where the charge is going, the fact remains that it all has to come out of V_{CC} to turn the MOSFET gate on, and when the MOSFET is turned back off, that charge all ends up at ground. In the meanwhile, it travels through the LTC1702's gate drivers, heating them up. More power lost!

In this case, the power is lost in little bite-sized chunks, one chunk per switch per cycle, with the size of the chunk set by the gate charge of the MOSFET. Every time the MOSFET switches, another chunk is lost. Clearly, the faster the clock runs, the more important gate charge becomes as a loss term. Old-fashioned switchers that ran at 20kHz could pretty much ignore gate charge as a loss term; in the 550kHz LTC1702, gate charge loss can be a significant efficiency penalty. Gate charge loss can be the dominant loss term at medium load currents, especially with large MOSFETs. Gate charge loss is also the primary cause of power dissipation in the LTC1702 itself.

TG Charge Pump

There's another nuance of MOSFET drive that the LTC1702 needs to get around. The LTC1702 is designed to use N-channel MOSFETs for both QT and QB, primarily because N-channel MOSFETs generally cost less and have lower $R_{DS(ON)}$ than similar P-channel MOSFETs. Turning QB on is no big deal since the source of QB is attached to PGND; the LTC1702 just switches the BG pin between PGND and V_{CC}. Driving QT is another matter. The source of QT is connected to SW which rises to V_{CC} when QT is on. To keep QT on, the LTC1702 must get TG one MOSFET $V_{GS(ON)}$ above V_{CC}. It does this by utilizing a floating driver with the negative lead of the driver attached to SW (the source of QT) and the V_{CC} lead of the driver coming out separately at BOOST. An external 1µF capacitor C_{CP} connected between SW and BOOST (Figure 2) supplies power to BOOST when SW is high, and recharges itself through D_{CP} when SW is low. This simple charge pump keeps the TG driver alive even as it swings well above V_{CC}. The value of the bootstrap capacitor C_{CP} needs to be at least 100 times that of the total input capacitance of the topside MOSFET(s). For very large external MOSFETs (or multiple MOSFETs in parallel), C_{CP} may need to be increased over the 1µF value.

INPUT SUPPLY

The BiCMOS process that allows the LTC1702 to include large MOSFET drivers on-chip also limits the maximum input voltage to 7V. This limits the practical maximum input supply to a loosely regulated 5V or 6V rail. The LTC1702 will operate properly with input supplies down to about 3V, so a typical 3.3V supply can also be used if the external MOSFETs are chosen appropriately (see the Power MOSFETs section).

At the same time, the input supply needs to supply several amps of current without excessive voltage drop. The input supply must have regulation adequate to prevent sudden load changes from causing the LTC1702 input voltage to dip. In most typical applications where the LTC1702 is generating a secondary low voltage logic supply, all of these input conditions are met by the main system logic supply when fortified with an input bypass capacitor.

Input Bypass

A typical LTC1702 circuit running from a 5V logic supply might provide 1.6V at 10A at one of its outputs. 5V to 1.6V implies a duty cycle of 32%, which means QT is on 32% of each switching cycle. During QT's on-time, the current drawn from the input equals the load current and during the rest of the cycle, the current drawn from the input is near zero. This 0A to 10A, 32% duty cycle pulse train adds up to $4.7A_{RMS}$ at the input. At 550kHz, switching cycles last about 1.8µs—most system logic supplies have no hope of regulating output current with that kind of speed. A local input bypass capacitor is required to make up the difference and prevent the input supply from dropping drastically when QT kicks on. This capacitor is usually chosen for RMS ripple current capability and ESR as well as value.

The input bypass capacitor in an LTC1702 circuit is common to both channels. Consider our 10A example case with the other side of the LTC1702 disabled. The input bypass capacitor gets exercised in three ways: its ESR

APPLICATIONS INFORMATION

must be low enough to keep the initial drop as QT turns on within reason (100mV or so); its RMS current capability must be adequate to withstand the $4.6A_{RMS}$ ripple current at the input and the capacitance must be large enough to maintain the input voltage until the input supply can make up the difference. Generally, a capacitor that meets the first two parameters will have far more capacitance than is required to keep capacitance-based droop under control. In our example, we need 0.01Ω ESR to keep the input drop under 100mV with a 10A current step and $4.6A_{RMS}$ ripple current capacity to avoid overheating the capacitor. These requirements can be met with multiple low ESR tantalum or electrolytic capacitors in parallel, or with a large monolithic ceramic capacitor.

The two sides of the LTC1702 run off a single master clock and are wired 180° out of phase with each other to significantly reduce the total capacitance/ESR needed at the input. Assuming 100mV of ripple and 10A output current, we needed an ESR of 0.01Ω and 4.7A ripple current capability for one side. Now, assume both sides are running simultaneously with identical loading. If the two sides switched in phase, all the loading conditions would double and we'd need enough capacitance for $9.4A_{RMS}$ and 0.005Ω ESR. With the two sides out of phase, the input current is $4.8A_{RMS}$—barely larger than the single case (Figure 7)! The peak current deltas are still

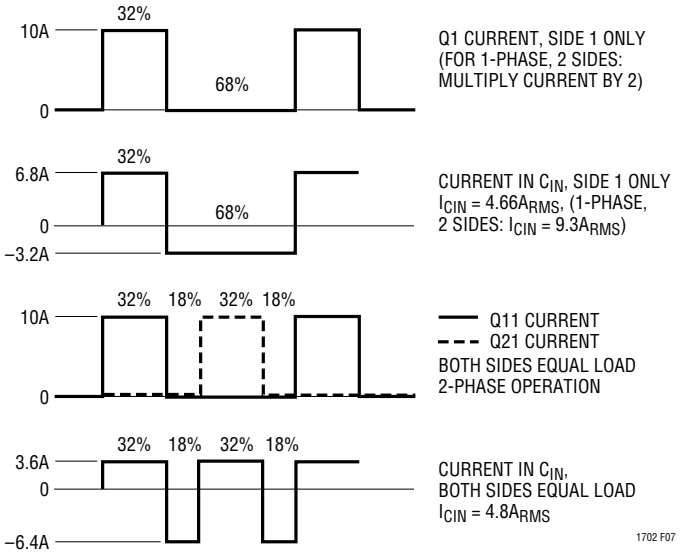

Figure 7. RMS Input Current

Calculating RMS Current in C_{IN}

A buck regulator like the LTC1702 draws pulses of current from the input capacitor during normal operation. The input capacitor sees this as AC current, and dissipates power proportional to the RMS value of the input current waveform. To properly specify the capacitor, we need to know the RMS value of the input current. Calculating the approximate RMS value of a pulse train with a fixed duty cycle is straightforward, but the LTC1702 complicates matters by running two sides simultaneously and out of phase, creating a complex waveform at the input.

To calculate the approximate RMS value of the input current, we first need to calculate the average DC value with both sides of the LTC1702 operating at maximum load. Over a single period, the system will spend some time with one top switch on and the other off, perhaps some time with both switches on, and perhaps some time with both switches off. During the time each top switch is on, the current will equal that side's full load output current. When both switches are on, the total current will be the sum of the two full load currents, and when both are off, the current is effectively zero. Multiply each current value by the percentage of the period that the current condition lasts, and sum the results—this is the average DC current value.

As an example, consider a circuit that takes a 5V input and generates 3.3V at 3A at side 1 and 1.6V at 10A at side 2. When a cycle starts, TG1 turns on and 3A flows

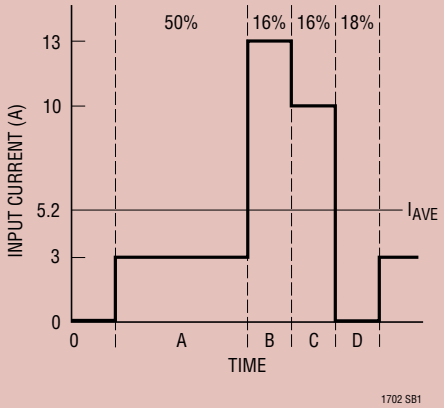

Figure SB1. Average Current Calculation

APPLICATIONS INFORMATION

from C_{IN} (time point A). 50% of the way through, TG2 turns on and the total current is 13A (time point B). Shortly thereafter, TG1 turns off and the current drops to 10A (time point C). Finally, TG2 turns off and the current spends a short time at 0 before TG1 turns on again (time point D).

$$I_{AVG} = (3A \bullet 0.5) + (13A \bullet 0.16) + (10A \bullet 0.16) + (0A \bullet 0.18) = 5.18A$$

Now we can calculate the RMS current. Using the same waveform we used to calculate the average DC current, subtract the average current from each of the DC values. Square each current term and multiply the squares by the same period percentages we used to calculate the average DC current. Sum the results and take the square root. The result is the approximate RMS current as seen by the input capacitor with both sides of the LTC1702 at full load. Actual RMS current will differ due to inductor ripple current and resistive losses, but this approximate value is adequate for input capacitor calculation purposes.

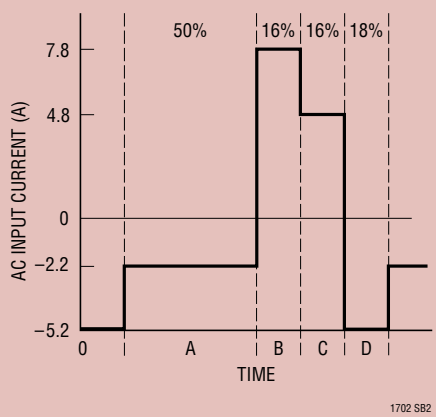

Figure SB2. AC Current Calculation

$$I_{RMS} = \sqrt{(-2.18^2 \bullet 0.5) + (7.82^2 \bullet 0.16) + (4.82^2 \bullet 0.16) + (-5.18^2 \bullet 0.18)} = 4.55A_{RMS}$$

If the circuit is likely to spend time with one side operating and the other side shut down, the RMS current will need to be calculated for each possible case (side 1 on, side 2 off; side 1 off, side 2 on; both sides on). The capacitor must be sized to withstand the largest RMS current of the three—sometimes this occurs with one side shut down!

Side 1 only:

$$I_{AVE1} = (3A \bullet 0.67) + (0A \bullet 0.33) = 2.01A$$

$$I_{RMS1} = \sqrt{(1^2 \bullet 0.67) + (-2^2 \bullet 0.33)} = 1.42A_{RMS}$$

Side 2 only:

$$I_{AVE2} = (10A \bullet 0.32) + (0A \bullet 0.68) = 3.2A$$

$$I_{RMS2} = \sqrt{(6.8^2 \bullet 0.32) + (-3.2^2 \bullet 0.68)} = 4.66A_{RMS} > 4.55A_{RMS}$$

Consider the case where both sides are operating at the same load, with a 50% duty cycle at each side. The RMS current with both sides running is near zero, while the RMS current with one side active is 1/2 the total load current of that side. The 2-phase, 5V to 2.5V circuit in the applications section takes advantage of this phenomenon, allowing it to supply 40A of output current with only 120µF of input capacitance (and only 40µF of output capacitance!).

only 10A, requiring the same 0.01Ω ESR rating. As long as the capacitor we chose for the single side application can support the slightly higher $4.8A_{RMS}$ current, we can add the second channel without changing the input capacitor at all. As a general rule, an input bypass capacitor capable of supporting the larger output current channel can support both channels running simultaneously (see the 2-Phase Operation section for more details).

Tantalum capacitors are a popular choice as input capacitors for LTC1702 applications, but they deserve a special caution here. Generic tantalum capacitors have a destructive failure mechanism when they are subjected to large RMS currents (like those seen at the input of a LTC1702). At some random time after they are turned on, they can blow up for no apparent reason. The capacitor manufacturers are aware of this and sell special “surge tested”

APPLICATIONS INFORMATION

tantalum capacitors specifically designed for use with switching regulators. When choosing a tantalum input capacitor, make sure that it is rated to carry the RMS current that the LTC1702 will draw. If the data sheet doesn't give an RMS current rating, chances are the capacitor isn't surge tested. Don't use it!

OUTPUT BYPASS CAPACITOR

The output bypass capacitor has quite different requirements from the input capacitor. The ripple current at the output of a buck regulator like the LTC1702 is much lower than at the input, due to the fact that the inductor current is constantly flowing at the output whenever the LTC1702 is operating in continuous mode. The primary concern at the output is capacitor ESR. Fast load current transitions at the output will appear as voltage across the ESR of the output bypass capacitor until the feedback loop in the LTC1702 can change the inductor current to match the new load current value. This ESR step at the output is often the single largest budget item in the load regulation calculation. As an example, our hypothetical 1.6V, 10A switcher with a 0.01Ω ESR output capacitor would experience a 100mV step at the output with a 0 to 10A load step—a 6.3% output change!

Usually the solution is to parallel several capacitors at the output. For example, to keep the transient response inside of 3% with the previous design, we'd need an output ESR better than 0.0048Ω. This can be met with three 0.014Ω, 470μF low ESR tantalum capacitors in parallel.

INDUCTOR

The inductor in a typical LTC1702 circuit is chosen primarily for value and saturation current. The inductor value sets the ripple current, which is commonly chosen at around 40% of the anticipated full load current. Ripple current is set by:

$$I_{RIPPLE} = \frac{t_{ON(Q2)}(V_{OUT})}{L}$$

In our hypothetical 1.6V, 10A example, we'd set the ripple current to 40% of 10A or 4A, and the inductor value would be:

$$L = \frac{t_{ON(Q2)}(V_{OUT})}{I_{RIPPLE}} = \frac{(1.2\mu s)(1.6V)}{4A} = 0.5\mu H$$

$$\text{with } t_{ON(Q2)} = \left(1 - \frac{1.6V}{5V}\right) / 550kHz = 1.2\mu s$$

The inductor must not saturate at the expected peak current. In this case, if the current limit was set to 15A, the inductor should be rated to withstand 15A + 1/2 I_{RIPPLE}, or 17A without saturating.

FEEDBACK LOOP/COMPENSATION[1]

Feedback Loop Types

In a typical LTC1702 circuit, the feedback loop consists of the modulator, the external inductor and output capacitor, and the feedback amplifier and its compensation network. All of these components affect loop behavior and need to be accounted for in the loop compensation. The modulator consists of the internal PWM generator, the output MOSFET drivers and the external MOSFETs themselves. From a feedback loop point of view, it looks like a linear voltage transfer function from COMP to SW and has a gain roughly equal to the input voltage. It has fairly benign AC behavior at typical loop compensation frequencies with significant phase shift appearing at half the switching frequency.

The external inductor/output capacitor combination makes a more significant contribution to loop behavior. These components cause a second order LC roll-off at the output, with the attendant 180° phase shift. This roll-off is what filters the PWM waveform, resulting in the desired DC output voltage, but the phase shift complicates the loop compensation if the gain is still higher than unity at the pole frequency. Eventually (usually well above the LC pole frequency), the reactance of the output capacitor will approach its ESR, and the roll-off due to the capacitor will stop, leaving 6dB/octave and 90° of phase shift (Figure 8).

So far, the AC response of the loop is pretty well out of the user's control. The modulator is a fundamental piece of the LTC1702 design, and the external L and C are usually chosen based on the regulation and load current requirements without considering the AC loop response. The

[1]The information in this section is based on the paper "The K Factor: A New Mathematical Tool for Stability Analysis and Synthesis" by H. Dean Venable, Venable Industries, Inc. For complete paper, see "Reference Reading #4" at www.linear-tech.com.

APPLICATIONS INFORMATION

feedback amplifier, on the other hand, gives us a handle with which to adjust the AC response. The goal is to have 180° phase shift at DC (so the loop regulates) and something less than 360° phase shift at the point that the loop gain falls to 0dB. The simplest strategy is to set up the feedback amplifier as an inverting integrator, with the 0dB frequency lower than the LC pole (Figure 9). This "type 1" configuration is stable but transient response will be less than exceptional if the LC pole is at a low frequency.

Figure 10 shows an improved "type 2" circuit that uses an additional pole-zero pair to temporarily remove 90° of phase shift. This allows the loop to remain stable with 90° more phase shift in the LC section, provided the loop reaches 0dB gain near the center of the phase "bump." Type 2 loops work well in systems where the ESR zero in the LC roll-off happens close to the LC pole, limiting the total phase shift due to the LC. The additional phase compensation in the feedback amplifier allows the 0dB point to be at or above the LC pole frequency, improving loop bandwidth substantially over a simple type 1 loop. It has limited ability to compensate for LC combinations where low capacitor ESR keeps the phase shift near 180° for an extended frequency range. LTC1702 circuits using conventional switching grade electrolytic output capacitors can often get acceptable phase margin with type 2 compensation.

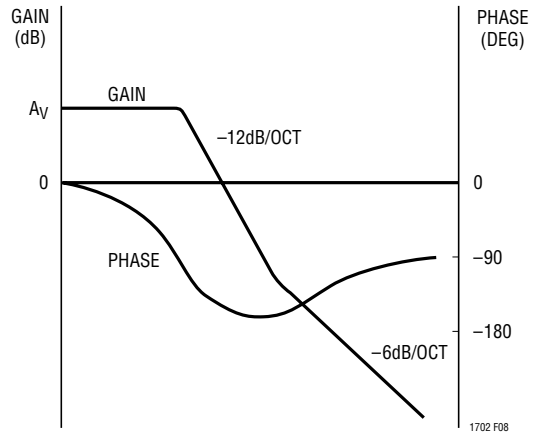

Figure 8. Transfer Function of Buck Modulator

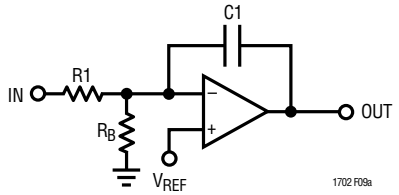

Figure 9a. Type 1 Amplifier Schematic Diagram

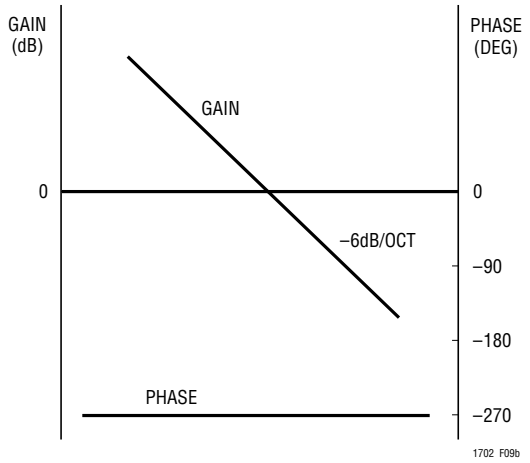

Figure 9b. Type 1 Amplifier Transfer Function

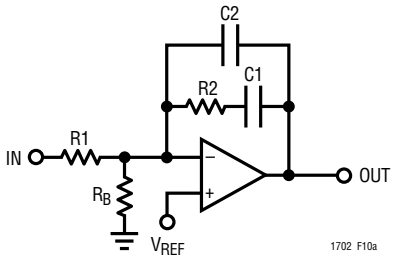

Figure 10a. Type 2 Amplifier Schematic Diagram

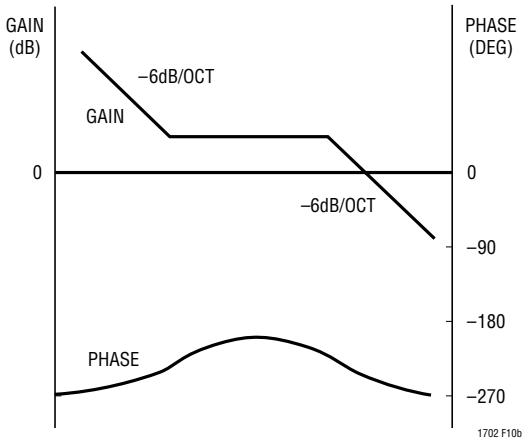

Figure 10b. Type 2 Amplifier Transfer Function

APPLICATIONS INFORMATION

"Type 3" loops (Figure 11) use two poles and two zeros to obtain a 180° phase boost in the middle of the frequency band. A properly designed type 3 circuit can maintain acceptable loop stability even when low output capacitor ESR causes the LC section to approach 180° phase shift well above the initial LC roll-off. As with a type 2 circuit, the loop should cross through 0dB in the middle of the phase bump to maximize phase margin. Many LTC1702 circuits using low ESR tantalum or OS-CON output capacitors need type 3 compensation to obtain acceptable phase margin with a high bandwidth feedback loop.

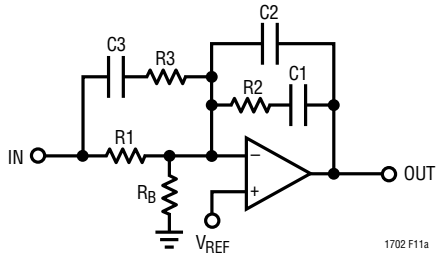

Figure 11a. Type 3 Amplifier Schematic Diagram

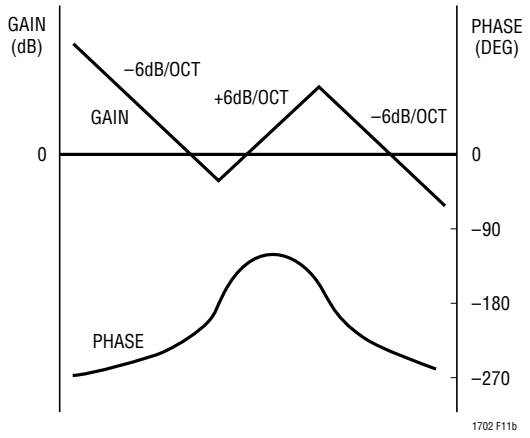

Figure 11B. Type 3 Amplifier Transfer Function

Feedback Component Selection

Selecting the R and C values for a typical type 2 or type 3 loop is a nontrivial task. The applications shown in this data sheet show typical values, optimized for the power components shown. They should give acceptable performance with similar power components, but can be way off if even one major power component is changed significantly. Applications that require optimized transient response will need to recalculate the compensation values specifically for the circuit in question. The underlying mathematics are complex, but the component values can be calculated in a straightforward manner if we know the gain and phase of the modulator at the crossover frequency.

Modulator gain and phase can be measured directly from a breadboard, or can be simulated if the appropriate parasitic values are known. Measurement will give more accurate results, but simulation can often get close enough to give a working system. To measure the modulator gain and phase directly, wire up a breadboard with an LTC1702 and the actual MOSFETs, inductor, and input and output capacitors that the final design will use. This breadboard should use appropriate construction techniques for high speed analog circuitry: bypass capacitors located close to the LTC1702, no long wires connecting components, appropriately sized ground returns, etc. Wire the feedback amplifier as a simple type 1 loop, with a 10k resistor from V_{OUT} to FB and a 0.1µF feedback capacitor from COMP to FB. Choose the bias resistor (R_B) as required to set the desired output voltage. Disconnect R_B from ground and connect it to a signal generator or to the source output of a network analyzer (Figure 12) to inject a test signal into the loop. Measure the gain and phase from the COMP pin to the output node at the positive terminal of the output capacitor. Make sure the analyzer's input is AC coupled so that the DC voltages present at both the COMP and V_{OUT}

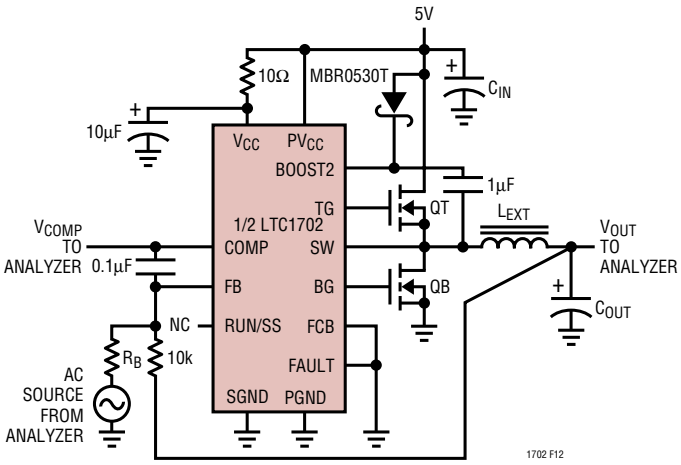

Figure 12. Modulator Gain/Phase Measurement Set-Up

APPLICATIONS INFORMATION

nodes don't corrupt the measurements or damage the analyzer.

If breadboard measurement is not practical, a SPICE simulation can be used to generate approximate gain/phase curves. Plug the expected capacitor, inductor and MOSFET values into the following SPICE deck and generate an AC plot of $V(V_{OUT})/V(COMP)$ in dB and phase of V(OUT) in degrees. Refer to your SPICE manual for details of how to generate this plot.

```
*1702 modulator gain/phase
*©1999 Linear Technology
*this file written to run with PSpice 8.0
*may require modifications for other SPICE
simulators

*MOSFETs
rfet mod sw 0.02        ;MOSFET rdson

*inductor
lext sw out1 1u         ;inductor value
rl out1 out 0.005       ;inductor series R

*output cap
cout out out2 1000u     ;capacitor value
resr out2 0 0.01        ;capacitor ESR

*1702 internals
emod mod 0 comp 0 5     ;3.3 for 3.3V supply
vstim comp 0 0 ac 1     ;ac stimulus
.ac dec 100 1k 1meg
.probe
.end
```

With the gain/phase plot in hand, a loop crossover frequency can be chosen. Usually the curves look something like Figure 8. Choose the crossover frequency in the rising or flat parts of the phase curve, beyond the external LC poles. Frequencies between 10kHz and 50kHz usually work well. Note the gain (GAIN, in dB) and phase (PHASE, in degrees) at this point. The desired feedback amplifier gain will be –GAIN to make the loop gain 0dB at this frequency. Now calculate the needed phase boost, assuming 60° as a target phase margin:

$$BOOST = -(PHASE + 30°)$$

If the required BOOST is less than 60°, a type 2 loop can be used successfully, saving two external components. BOOST values greater than 60° usually require type 3 loops for satisfactory performance.

Finally, choose a convenient resistor value for R1 (10k is usually a good value). Now calculate the remaining values:

(K is a constant used in the calculations)

f = chosen crossover frequency

$G = 10^{(GAIN/20)}$ (this converts GAIN in dB to G in absolute gain)

Type 2 Loop:

$$K = \mathrm{Tan}\left(\frac{BOOST}{2} + 45°\right)$$

$$C2 = \frac{1}{2\pi f G K R1}$$

$$C1 = C2\left(K^2 - 1\right)$$

$$R2 = \frac{K}{2\pi f C1}$$

$$R_B = \frac{V_{REF}(R1)}{V_{OUT} - V_{REF}}$$

Type 3 Loop:

$$K = \mathrm{Tan}^2\left(\frac{BOOST}{4} + 45°\right)$$

$$C2 = \frac{1}{2\pi f G R1}$$

$$C1 = C2\left(K - 1\right)$$

$$R2 = \frac{\sqrt{K}}{2\pi f C1}$$

$$R3 = \frac{R1}{\left(K - 1\right)}$$

$$C3 = \frac{1}{2\pi f \sqrt{K}\, R3}$$

$$R_B = \frac{V_{REF}(R1)}{V_{OUT} - V_{REF}}$$

APPLICATIONS INFORMATION

CURRENT LIMIT PROGRAMMING

Programming the current limit on the LTC1702 is straightforward. The I_{MAX} pin sets the current limit by setting the maximum allowable voltage drop across QB (the bottom MOSFET) before the current limit circuit engages. The voltage across QB is set by its on-resistance and the current flowing in the inductor, which is the same as the output current. The LTC1702 current limit circuit inverts the voltage at I_{MAX} before comparing it with the negative voltage across QB, allowing the current limit to be set with a positive voltage.

To set the current limit, calculate the expected voltage drop across QB at the maximum desired current:

$$V_{PROG} = (I_{ILIM})(R_{DS(ON)}) + 100mV$$

I_{LIM} should be chosen to be quite a bit higher than the expected operating current, to allow for MOSFET $R_{DS(ON)}$ changes with temperature. Setting I_{LIM} to 150% of the maximum normal operating current is usually safe and will adequately protect the power components if they are chosen properly. The 100mV term is an approximate factor that corrects for errors caused by ringing on the switch node (illustrated in Figure 6). This factor will change depending on the layout and the components used, but 100mV is usually a good starting point. V_{DROP} is then programmed at the I_{MAX} pin using the internal 10μA pull-up and an external resistor:

$$R_{ILIM} = V_{PROG}/10\mu A$$

The resulting value of R_{ILIM} should be checked in an actual circuit to ensure that the I_{LIM} circuit kicks in as expected. MOSFET $R_{DS(ON)}$ specs are like horsepower ratings in automobiles, and should be taken with a grain of salt. Circuits that use very low values for R_{IMAX} (<20k) should be checked carefully, since small changes in R_{IMAX} can cause large I_{LIM} changes when the 100mV correction factor makes up a large percentage of the total V_{PROG} value. If V_{PROG} is set too low, the LTC1702 may fail to start up.

Accuracy Trade-Offs

The V_{DS} sensing scheme used in the LTC1702 is not particularly accurate, primarily due to uncertainty in the $R_{DS(ON)}$ from MOSFET to MOSFET. A second error term arises from the ringing present at the SW pin, which causes the V_{DS} to look larger than $(I_{LOAD})(R_{DS(ON)})$ at the beginning of QB's on-time. These inaccuracies do not prevent the LTC1702 current limit circuit from protecting itself and the load from damaging overcurrent conditions, but they do prevent the user from setting the current limit to a tight tolerance if more than one copy of the circuit is being built. The 50% factor in the current setting equation above reflects the margin necessary to ensure that the circuit will stay out of current limit at the maximum normal load, even with a hot MOSFET that is running quite a bit higher than its $R_{DS(ON)}$ spec.

FCB OPERATION/SECONDARY WINDINGS

The FCB pin can be used in conjunction with a secondary winding on one side of the LTC1702 to generate a third regulated voltage output. This output can be directly regulated at the FCB pin. In theory, a fourth output could be added, either unregulated or with additional external circuitry at the FCB pin.

The extra auxiliary output is taken from a second winding on the core of the inductor on one channel, converting it into a transformer (Figure 13). The auxiliary output voltage is set by the main output voltage and the turns ratio of the extra winding to the primary winding. Load regulation at the auxiliary output will be relatively good as long as the main output is running in continuous mode. As the load on the main channel drops and the LTC1702 switches to discontinuous or Burst Mode operation, the auxiliary output will not be able to maintain regulation, especially if the load at the auxiliary output remains heavy.

To avoid this, the auxiliary output voltage can be divided down with a conventional feedback resistor string with the divided auxiliary output voltage fed back to the FCB pin (Figure 13). The FCB pin threshold is trimmed to 800mV

APPLICATIONS INFORMATION

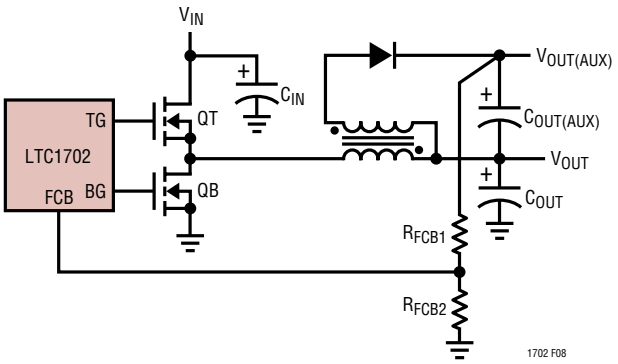

Figure 13. Regulating an Auxiliary Output with the FCB Pin

with 10mV of hysteresis, allowing fairly precise control of the auxiliary voltage. If the LTC1702 is in discontinuous or Burst Mode operation and the auxiliary output voltage drops, the FCB pin will trip and the LTC1702 will resume continuous operation regardless of the load on the main output. The FCB pin removes the requirement that power must be drawn from the inductor primary in order to extract power from the auxiliary windings. With the loop in continuous mode, the auxiliary outputs may be loaded without regard to the primary load. Note that if the LTC1702 is already running in continuous mode and the auxiliary output drops due to excessive loading, no additional action can be taken by the LTC1702 to regulate the auxiliary output.

POWER GOOD/FAULT FLAGS

The PGOOD pins report the status of the output voltage at their respective outputs. Each is an open-drain output that pulls low until the FB pin rises to (V_{REF} – 5%), indicating that the output voltage has risen to within 5% of the programmed output voltage. Each PGOOD pin can interface directly to standard logic inputs if an appropriate pull-up resistor is added, or the two pins can be tied together with a single pull-up to give a “both good” signal. Each PGOOD pin includes an internal 100µs delay to prevent glitches at the output from indicating false PGOOD signals.

The FAULT pin is an additional open-drain output that indicates if one or both of the outputs has exceeded 15% of its programmed output voltage. FAULT includes an internal 10µA pull-up to V_{CC} and does not require an external pull-up to interface to standard logic. FAULT pulls low in normal operation, and releases when a overvoltage fault is detected.

When an overvoltage fault occurs, an internal latch sets and FAULT goes high, disabling the LTC1702 until the latch is cleared by recycling the power or pulling both RUN/SS pins low simultaneously. Alternately, the FAULT pin can be pulled back low externally with an open-collector/open-drain device or an NFET or NPN, which will allow the LTC1702 to resume normal operation, but will not reset the latch. If the pull-down is later removed, the LTC1702 will latch off again unless the latch is reset by cycling the power or RUN/SS pins.

Note that both the PGOOD pins and the FAULT pin monitor the output voltages by watching the FB pins. During normal operation, each FB pin is held at a virtual ground by the feedback amplifier, and changes at the output will not appear at FB. This is not an issue with a properly designed circuit, since the virtual ground at FB implies that the output voltage is under control. If the feedback amplifier loses control of the output, the virtual ground disappears and the PGOOD circuit can see any output changes. This occurs whenever the soft-start or current limit circuits are active, whenever the MIN or MAX comparators are active, or any time the feedback amplifier output (the COMP pin) hits a rail or is in slew limit. Since the MAX comparator will engage well before the output reaches the +15% fault level, the FAULT output is largely unaffected by the virtual ground at FB.

OPTIMIZING PERFORMANCE

2-Step Conversion

The LTC1702 is ideally suited for use in 2-step conversion systems. 2-step systems use a primary regulator to convert the input power source (batteries or AC line voltage)

APPLICATIONS INFORMATION

to an intermediate supply voltage, often 5V. The LTC1702 then converts the intermediate voltage to the low voltage, high current supplies required by the system. Compared to a 1-step converter that converts a high input voltage directly to a very low output voltage, the 2-step converter exhibits superior transient response, smaller component size and equivalent efficiency. Thermal management and layout complexity are also improved with a 2-step approach.

A typical notebook computer supply might use a 4-cell Li-Ion battery pack as an input supply with a 15V nominal terminal voltage. The logic circuits require 5V/3A and 3.3V/5A to power system board logic, and 2.5V/0.5A, 1.8V/2A and 1.5V/10A to power the CPU. A typical 2-step conversion system would use a step-down switcher (perhaps an LTC1628 or two LTC1625s) to convert 15V to 5V and another to convert 15V to 3.3V (Figure 14). One channel of the LTC1702 would generate the 1.5V supply using the 3.3V supply as the input and the other channel would generate 1.8V using the 5V supply as the input. The corresponding 1-step system would use four similar step-down switchers, each using 15V as the input supply and generating one of the four output voltages. Since the 2.5V supply represents a small fraction of the total output power, either system can generate it from the 3.3V output using an LDO linear regulator, without the 75% linear efficiency making much of an impact on total system efficiency.

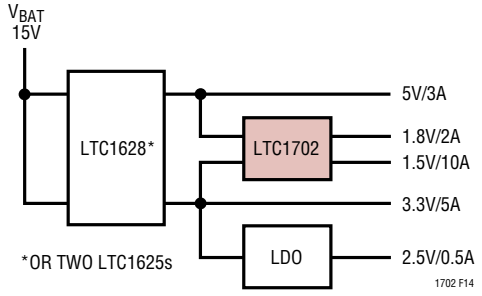

Figure 14. 2-Step Conversion Block Diagram

Clearly, the 5V and 3.3V sections of the two schemes are equivalent. The 2-step system draws additional power from the 5V and 3.3V outputs, but the regulation techniques and trade-offs at these outputs are similar. The difference lies in the way the 1.8V and 1.5V supplies are generated. For example, the 2-step system converts 3.3V to 1.5V with a 45% duty cycle. During the QT on-time, the voltage across the inductor is 1.8V and during the QB on-time, the voltage is 1.5V, giving roughly symmetrical transient response to positive and negative load steps. The 1.8V maximum voltage across the inductor allows the use of a small 0.47µH inductor while keeping ripple current under 4A (40% of the 10A maximum load). By contrast, the 1-step converter is converting 15V to 1.5V, requiring just a 10% duty cycle. Inductor voltages are now 13.5V when QT is on and 1.5V when QB is on, giving vastly different di/dt values and correspondingly skewed transient response with positive and negative current steps. The narrow 10% duty cycle usually requires a lower switching frequency, which in turn requires a higher value inductor and larger output capacitor. Parasitic losses due to the large voltage swing at the source of QT cost efficiency, eliminating any advantage the 1-step conversion might have had.

Note that power dissipation in the LTC1702 portion of a 2-step circuit is lower than it would be in a typical 1-step converter, even in cases where the 1-step converter has higher total efficiency than the 2-step system. In a typical microprocessor core supply regulator, for example, the regulator is usually located right next to the CPU. In a 1-step design, all of the power dissipated by the core regulator is right there next to the hot CPU, aggravating thermal management. In a 2-step LTC1702 design, a significant percentage of the power lost in the core regulation system happens in the 5V or 3.3V supply, which is usually away from the CPU. The power lost to heat in the LTC1702 section of the system is relatively low, minimizing the heat near the CPU.

APPLICATIONS INFORMATION

2-Step Efficiency Calculation

Calculating the efficiency of a 2-step converter system involves some subtleties. Simply multiplying the efficiency of the primary 5V or 3.3V supply by the efficiency of the 1.8V or 1.5V supply underestimates the actual efficiency, since a significant fraction of the total power is drawn from the 3.3V and 5V rails in a typical system. The correct way to calculate system efficiency is to calculate the power lost in each stage of the converter, and divide the total output power from all outputs by the sum of the output power plus the power lost:

$$\text{Efficiency} = \frac{\text{TotalOutputPower}}{\text{TotalOutputPower} + \text{TotalPowerLost}}(100\%)$$

In our example 2-step system, the total output power is:

Total output power =
15W + 16.5W + 1.25W + 3.6W + 15W = 51.35W
corresponding to 5V, 3.3V, 2.5V, 1.8V and 1.5V output voltages.

Assuming the LTC1702 provides 90% efficiency at each output, the additional load on the 5V and 3.3V supplies is:

1.5V: 15W/90% = 16.6W/3.3V = 5A from 3.3V
1.8V: 3.6W/90% = 4W/5V = 0.8A from 5V
2.5V: 1.25W/75% = 1.66W/3.3V = 0.5A from 3.3V

If the 5V and 3.3V supplies are each 94% efficient, the power lost in each supply is:

1.5V: 16.6W – 15W = 1.6W
1.8V: 4W – 3.6W = 0.4W
2.5V: 1.66W – 1.25W = 0.4W
3.3V: 17.55W – 16.5W = 1W
5V: 16W – 15W = 1W

Total loss = 4.4W

Total system efficiency =
51.35W/(51.35W + 4.4W) = 92.1%

Maximizing High Load Current Efficiency

Efficiency at high load currents (when the LTC1702 is operating in continuous mode) is primarily controlled by the resistance of the components in the power path (QT, QB, L_{EXT}) and power lost in the gate drive circuits due to MOSFET gate charge. Maximizing efficiency in this region of operation is as simple as minimizing these terms.

The behavior of the load over time affects the efficiency strategy. Parasitic resistances in the MOSFETs and the inductor set the maximum output current the circuit can supply without burning up. A typical efficiency curve (Figure 15) shows that peak efficiency occurs near 30% of this maximum current. If the load current will vary around the efficiency peak and will spend relatively little time at the maximum load, choosing components so that the average load is at the efficiency peak is a good idea. This puts the maximum load well beyond the efficiency peak, but usually gives the greatest system efficiency over time, which translates to the longest run time in a battery-powered system. If the load is expected to be relatively constant at the maximum level, the components should be chosen so that this load lands at the peak efficiency point, well below the maximum possible output of the converter.

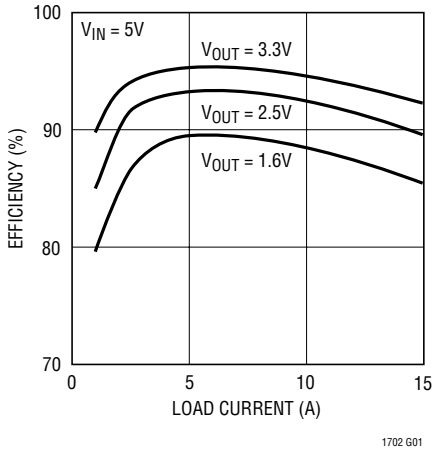

Figure 15. Typical LTC1702 Efficiency Curves

APPLICATIONS INFORMATION

Maximizing Low Load Current Efficiency

Low load current efficiency depends strongly on proper operation in discontinuous and Burst Mode operations. In an ideally optimized system, discontinuous mode reduces conduction losses but not switching losses, since each power MOSFET still switches on and off once per cycle. In a typical system, there is additional loss in discontinuous mode due to a small amount of residual current left in the inductor when QB turns off. This current gets dissipated across the body diode of either QT or QB. Some LTC1702 systems lose as much to body diode conduction as they save in MOSFET conduction. The real efficiency benefit of discontinuous mode happens when Burst Mode operation is invoked. At typical power levels, when Burst Mode operation is activated, gate drive is the dominant loss term. Burst Mode operation turns off all output switching for several clock cycles in a row, significantly cutting gate drive losses. As the load current in Burst Mode operation falls toward zero, the current drawn by the circuit falls to the LTC1702's background quiescent level—about 3mA per channel.

To maximize low load efficiency, make sure the LTC1702 is allowed to enter discontinuous and Burst Mode operation as cleanly as possible. FCB must be above its 0.8V threshold. Minimize ringing at the SW node so that the discontinuous comparator leaves as little residual current in the inductor as possible when QB turns off. It helps to connect the SW pin of the LTC1702 as close to the drain of QB as possible. An RC snubber network can also be added from SW to PGND.

REGULATION OVER COMPONENT TOLERANCE/ TEMPERATURE

DC Regulation Accuracy

The LTC1702 initial DC output accuracy depends mainly on internal reference accuracy, op amp offset and external resistor accuracy. Two LTC1702 specs come into play: feedback voltage and feedback voltage line regulation. The feedback voltage spec is 800mV ±8mV over the full temperature range, and is specified at the FB pin, which encompasses both reference accuracy and any op amp offset. This accounts for 1% error at the output with a 5V input supply. The feedback voltage line regulation spec adds an additional 0.05%/V term that accounts for change in reference output with change in input supply voltage. With a 5V supply, the errors contributed by the LTC1702 itself add up to no more than 1% DC error at the output.

The output voltage setting resistors (R1 and R_B in Figure 3) are the other major contributor to DC error. At a typical 1.xV output voltage, the resistors are of roughly the same value, which tends to halve their error terms, improving accuracy. Still, using 1% resistors for R1 and R_B will add 1% to the total output error budget, equal to that of all errors due to the LTC1702 combined. Using 0.1% resistors in just those two positions can nearly halve the DC output error for very little additional cost.

Load Regulation

Load regulation is affected by feedback voltage, feedback amplifier gain and external ground drops in the feedback path. Feedback voltage is covered above and is within 1% over temperature. A full-range load step might require a 10% duty cycle change to keep the output constant, requiring the COMP pin to move about 100mV. With amplifier gain at 85dB, this adds up to only a 10μV shift at FB, negligible compared to the reference accuracy terms.

External ground drops aren't so negligible. The LTC1702 can sense the positive end of the output voltage by attaching the feedback resistor directly at the load, but it cannot do the same with the ground lead. Just 0.001Ω of resistance in the ground lead at 10A load will cause a 10mV error in the output voltage—as much as all the other DC errors put together. Proper layout becomes essential to achieving optimum load regulation from the LTC1702. See the Layout/Troubleshooting section for more information. A properly laid out LTC1702 circuit should move less than a millivolt at the output from zero to full load.

TRANSIENT RESPONSE

Transient response is the other half of the regulation equation. The LTC1702 can keep the DC output voltage constant to within 1% when averaged over hundreds of

APPLICATIONS INFORMATION

cycles. Over just a few cycles, however, the external components conspire to limit the speed that the output can move. Consider our typical 5V to 1.6V circuit, subjected to a 1A to 5A load transient. Initially, the loop is in regulation and the DC current in the output capacitor is zero. Suddenly, an extra 4A start flowing out of the output capacitor while the inductor is still supplying only 1A. This sudden change will generate a $(4A)(C_{ESR})$voltage step at the output; with a typical 0.015Ω output capacitor ESR, this is a 60mV step at the output, or 3.8% (for a 1.6V output voltage).

Very quickly, the feedback loop will realize that something has changed and will move at the bandwidth allowed by the external compensation network towards a new duty cycle. If the bandwidth is set to 50kHz, the COMP pin will get to 60% of the way to 90% duty cycle in 3µs. Now the inductor is seeing 3.5V across itself for a large portion of the cycle, and its current will increase from 1A at a rate set by di/dt = V/L. If the inductor value is 0.5µH, the di/dt will be 3.5V/0.5µH or 7A/µs. Sometime in the next few microseconds after the switch cycle begins, the inductor current will have risen to the 5A level of the load current and the output capacitor will stop losing charge.

Note that the output voltage will stop dropping before the inductor current reaches this new output current level. Recall that any practical output capacitor looks like a pure capacitance in series with some amount of ESR. When a load transient hits, virtually all of the initial voltage drop at the output is due to IR drop across the ESR. The output capacitance begins to discharge at the same time and continues until the inductor current rises to match the new output current level.

The output voltage, however, will turn around and start heading the right way before this happens. The next time the top MOSFET turns on, the inductor current will begin increasing linearly. This increasing current flows almost entirely into the capacitor, going through the ESR as it does so (Figure 16). Positive di/dt in the inductor causes positive dv/dt in the ESR, regardless of what the "pure" capacitance is doing. The output voltage will turn around when the positive dv/dt across the ESR exceeds the negative dv/dt across the pure capacitance. If the expected load step (ΔI) is known, an optimum inductor value can be chosen:

$$L \le \left(V_{IN} - V_{OUT}\right) \bullet C \bullet \frac{ESR}{\Delta I}$$

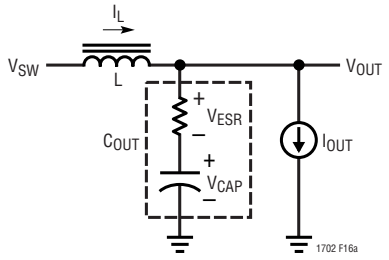

Figure 16a. Capacitor Parasitics Affecting Transient Recovery

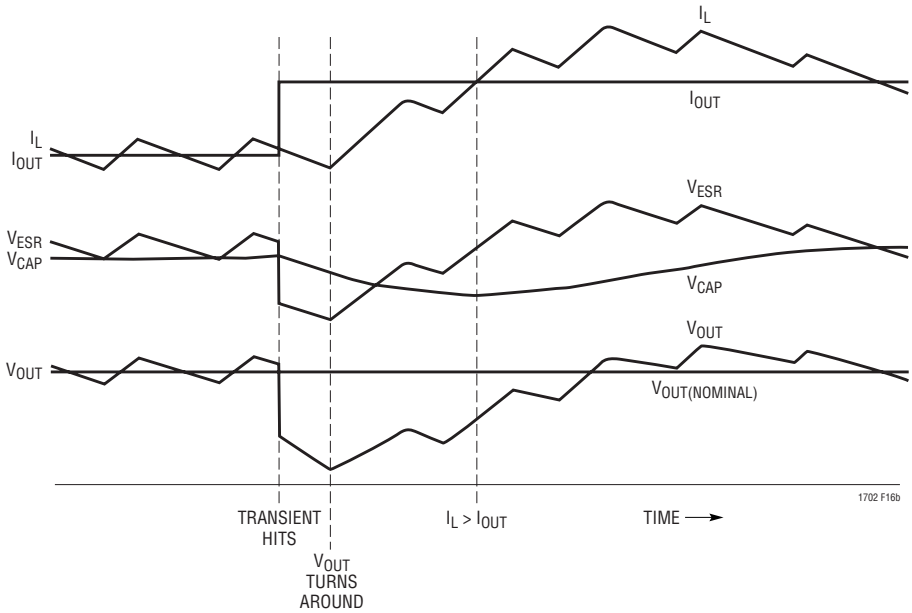

Figure 16b. Transient Recovery Curves

APPLICATIONS INFORMATION

Making L smaller than this optimum value yields little or no improvement in transient response. As the output voltage recovers, the inductor current will briefly rise above the level of the output current to replenish the charge lost from the output capacitor. With a properly compensated loop, the entire recovery time will be inside of 10µs.

Most loads care only about the maximum deviation from ideal, which occurs somewhere in the first two cycles after the load step hits. During this time, the output capacitor does all the work until the inductor and control loop regain control. The initial drop (or rise if the load steps down) is entirely controlled by the ESR of the capacitor and amounts to most of the total voltage drop. To minimize this drop, reduce the ESR as much as possible by choosing low ESR capacitors and/or paralleling multiple capacitors at the output. The capacitance value accounts for the rest of the voltage drop until the inductor current rises. With most output capacitors, several devices paralleled to get the ESR down will have so much capacitance that this drop term is negligible. Ceramic capacitors are an exception; a small ceramic capacitor can have suitably low ESR with relatively small values of capacitance, making this second drop term significant.

Optimizing Loop Compensation

Loop compensation has a fundamental impact on transient recovery time, the time it takes the LTC1702 to recover after the output voltage has dropped due to output capacitor ESR. Optimizing loop compensation entails maintaining the highest possible loop bandwidth while ensuring loop stability. The Feedback Component Selection section describes in detail how to design an optimized feedback loop, appropriate for most LTC1702 systems.

Voltage Positioning

If the load transients consist primarily of load steps from near zero load to full load and back, the transient response can be traded off against DC regulation performance by using a technique known as “voltage positioning.” The goal is to intentionally compromise the DC regulation loop such that the output rides near the maximum allowable value (often +5%) with no load and near the minimum allowable value at maximum load. With the load at zero, any transient that comes along will be a current increase which will cause the output voltage to fall. Since the output voltage is initially at a high value, it can fall further before

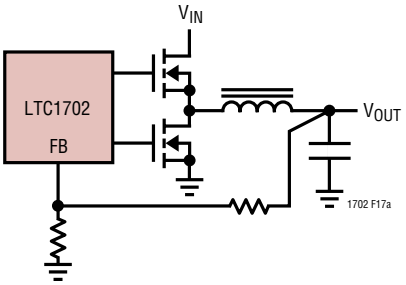

Figure 17a. Standard Regulator

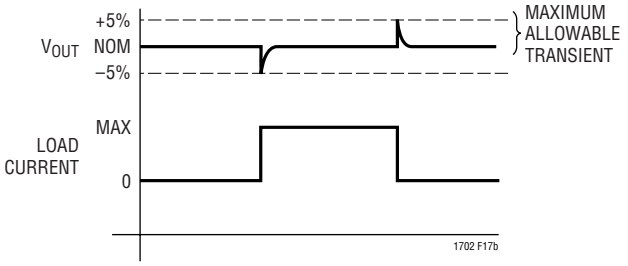

Figure 17b. Standard Regulator—Transient Response

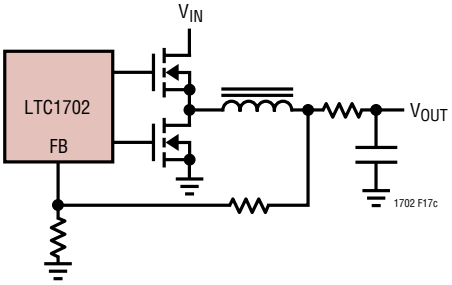

Figure 17c. Voltage Positioning Regulator

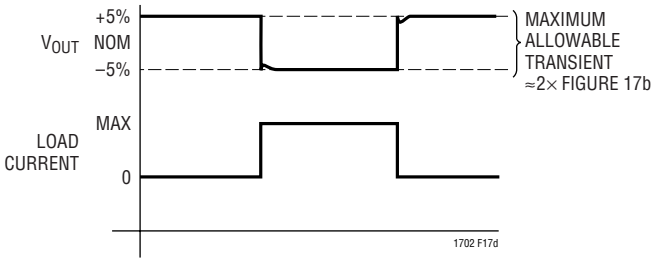

Figure 17d. Positioning Regulator—Transient Response

APPLICATIONS INFORMATION

it goes out of spec. Similarly, at full load, the output current can only decrease, causing a positive shift in the output voltage; the initial low value allows it to rise further before the spec is exceeded. The primary benefit of voltage positioning is it increases the allowable ESR of the output capacitors, saving cost. An additional bonus is that at maximum load, the output voltage is near the minimum allowable, decreasing the power dissipated in the load.

Implementing voltage positioning is as simple as creating an intentional resistance in the output path to generate the required voltage drop. This resistance can be a low value resistor, a length of PCB trace, or even the parasitic resistance of the inductor if an appropriate filter is used. If the LTC1702 senses the output voltage upstream from the resistance (Figure 17), the output voltage will move with load as I • R, where I is the load current and R is the value of the resistance. If the feedback network is then reset to regulate near the upper edge of the specified tolerance, the output voltage will ride high when I_{LOAD} is low and will ride low when I_{LOAD} is high. Compared to a traditional regulator, a voltage positioning regulator can theoretically stand as much as twice the ESR drop across the output capacitor while maintaining output voltage regulation. This means smaller, cheaper output capacitors can be used while keeping the output voltage within acceptable limits.

Measurement Techniques

Measuring transient response presents a challenge in two respects: obtaining an accurate measurement and generating a suitable transient to use to test the circuit. Output measurements should be taken with a scope probedirectly across the output capacitor. Proper high frequency probing techniques should be used. In particular, don't use the 6" ground lead that comes with the probe! Use an adapter that fits on the tip of the probe and has a short ground clip to ensure that inductance in the ground path doesn't cause a bigger spike than the transient signal being measured. Conveniently, the typical probe tip ground clip is spaced just right to span the leads of a typical output capacitor. In general, it is best to take this measurement with the 20MHz bandwidth limit on the oscilloscope turned on to limit high frequency noise. Note that microprocessor manufacturers typically specify ripple ≤20MHz, as energy above 20MHz is generally radiated and not conducted and will not affect the load even if it appears at the output capacitor.

Now that we know how to measure the signal, we need to have something to measure. The ideal situation is to use the actual load for the test, and switch it on and off while watching the output. If this isn't convenient, a current step generator is needed. This generator needs to be able to turn on and off in nanoseconds to simulate a typical switching logic load, so stray inductance and long clip leads between the LTC1702 and the transient generator must be minimized.

Figure 18 shows an example of a simple transient generator. Be sure to use a noninductive resistor as the load element—many power resistors use an inductive spiral pattern and are not suitable for use here. A simple solution is to take ten 1/4W film resistors and wire them in parallel to get the desired value. This gives a noninductive resistive load which can dissipate 2.5W continuously or 50W if pulsed with a 5% duty cycle, enough for most LTC1702 circuits. Solder the MOSFET and the resistor(s) as close to the output of the LTC1702 circuit as possible and set up the signal generator to pulse at a 100Hz rate with a 5% duty cycle. This pulses the LTC1702 with 500μs transients 10ms apart, adequate for viewing the entire transient recovery time for both positive and negative transitions while keeping the load resistor cool.

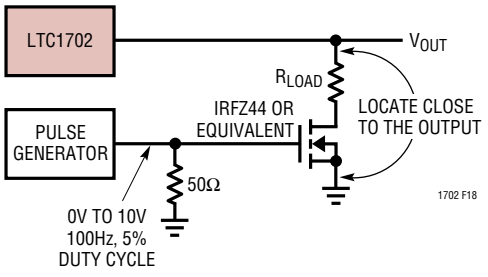

Figure 18. Transient Load Generator

APPLICATIONS INFORMATION

FAULT BEHAVIOR

Changing the Output Voltage on the Fly

Some applications use a switching scheme attached to the feedback resistors to allow the system to adjust the LTC1702 output voltage. The voltage can be changed on the fly if desired, but care must be taken to avoid tripping the overvoltage fault circuit. Stepping the voltage upwards abruptly is safe, but stepping down quickly by more than 15% can leave the system in a state where the output voltage is still at the old higher level, but the feedback node is set to expect a new, substantially lower voltage. If this condition persists for more than 10µs, the overvoltage fault circuitry will fire and latch off the LTC1702.

The simplest solution is to disable the fault circuit by grounding the FAULT pin. Systems that must keep the fault circuit active should ensure that the output voltage is never programmed to step down by more than 15% in any single step. The safest strategy is to step the output down by 10% or less at a time and wait for the output to settle to the new value before taking subsequent steps.

VID Applications

Certain microprocessors specify a set of codes that correspond to power supply voltages required from the regulator system. If these codes are changed on the fly, the same caveats as above apply. In addition, the switching matrix that programs the output voltage may vary its resistance significantly over the entire span of output voltages, potentially changing the loop compensation if the circuit is not designed properly. With a typical type 3 feedback loop (Figure 8), make sure that the R_{BIAS} resistor is modified to set the output voltage. The R1 resistor must stay constant to ensure that the loop compensation is not affected.

TYPICAL APPLICATIONS

3.3V_{IN}, 2.5V/1.8V Output Power Supply

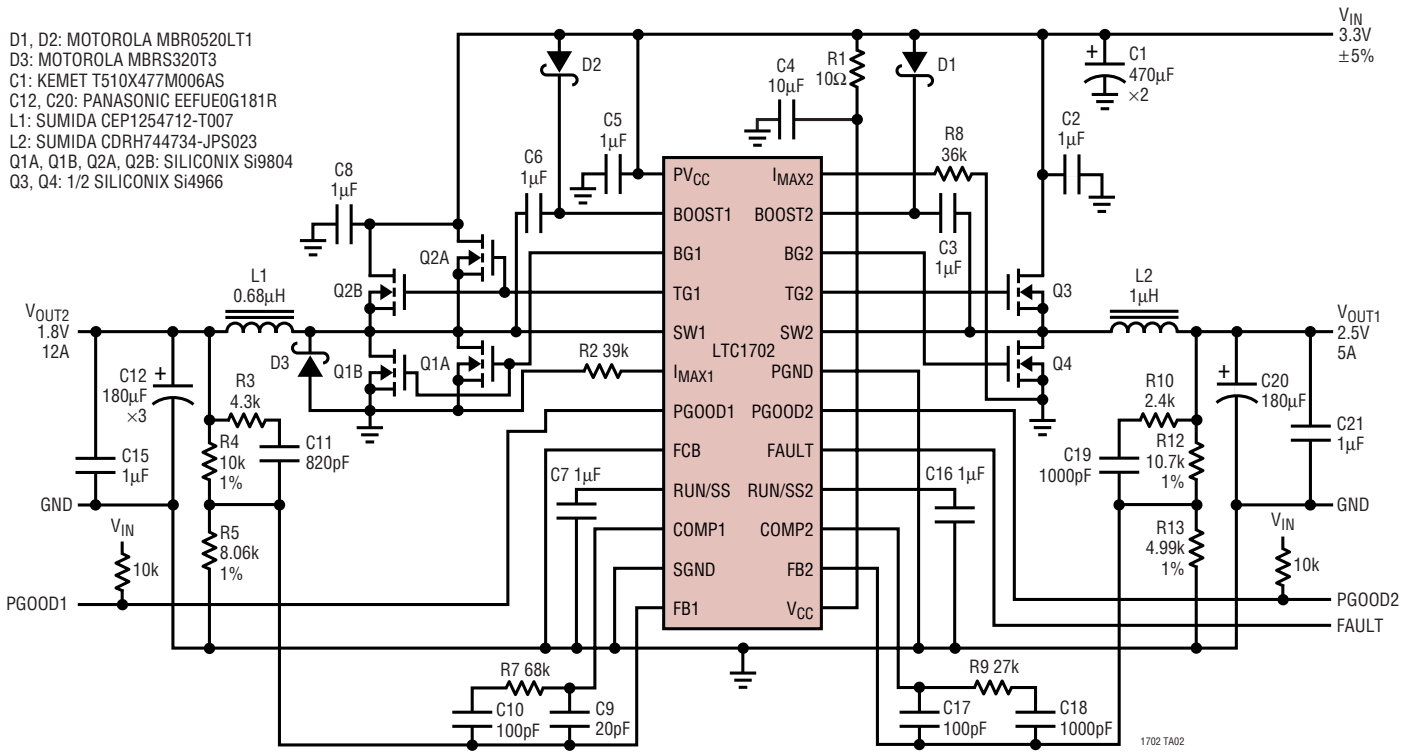

TYPICAL APPLICATIONS

28W Dual Output Power Supply

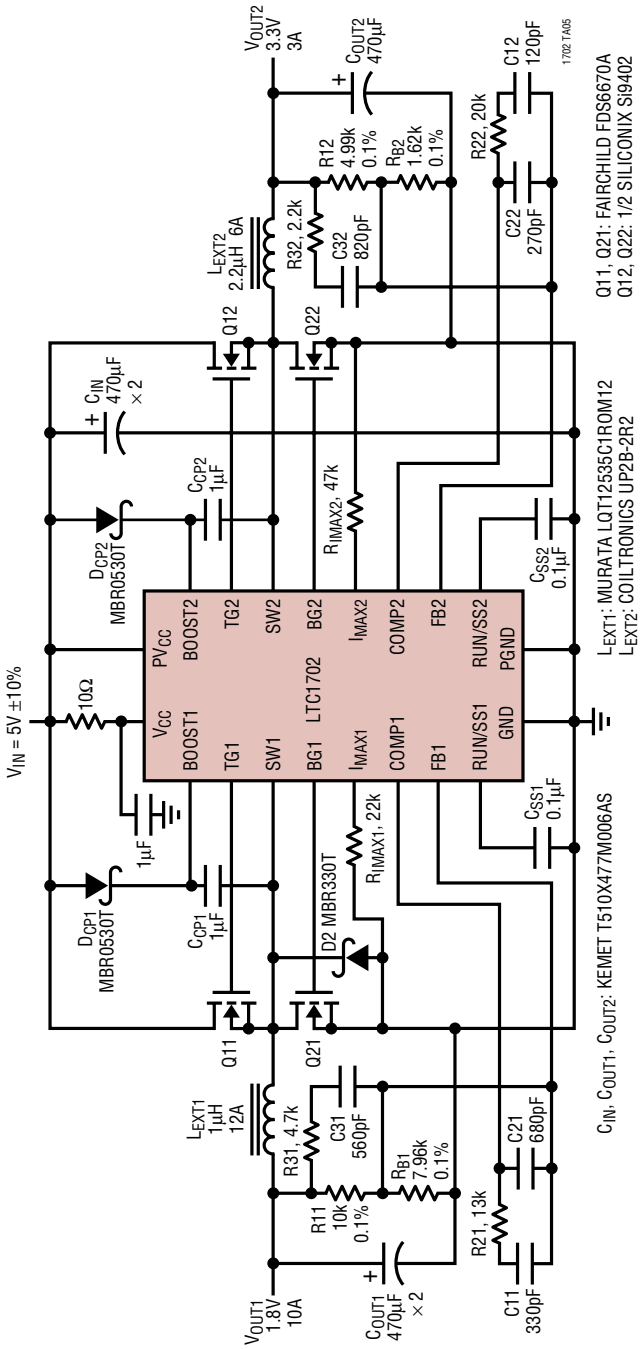

TYPICAL APPLICATIONS

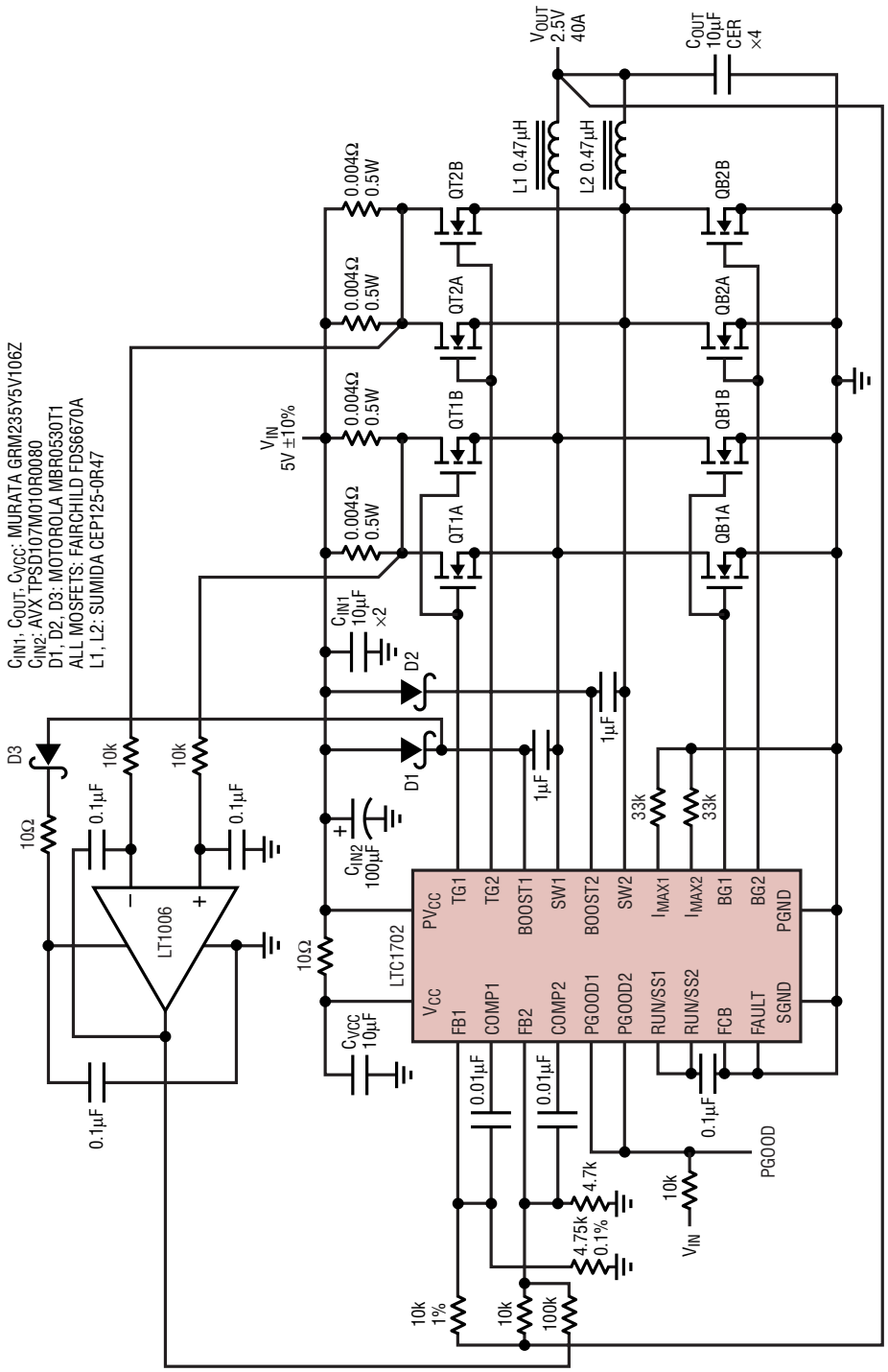

Single Output, 2-Phase, Minimum Capacitors 5V to 2.5V/40A Converter

PACKAGE DESCRIPTION

Dimensions in inches (millimeters) unless otherwise noted.

GN Package
24-Lead Plastic SSOP (Narrow 0.150)
(LTC DWG # 05-08-1641)

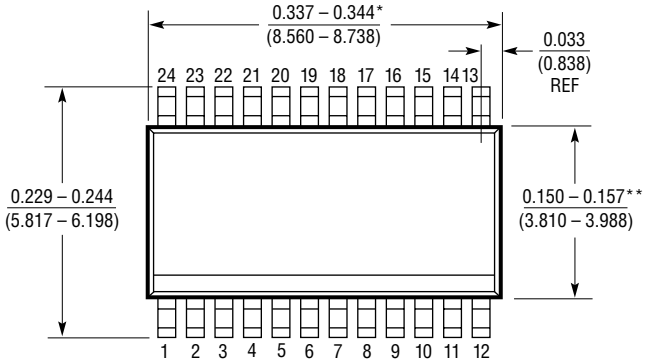

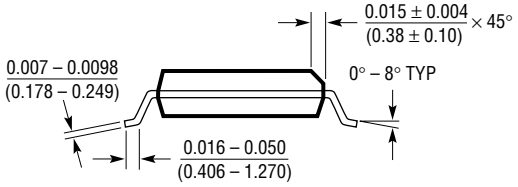

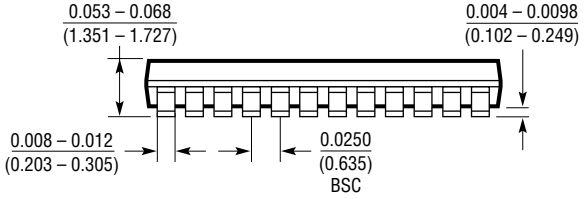

* DIMENSION DOES NOT INCLUDE MOLD FLASH. MOLD FLASH SHALL NOT EXCEED 0.006" (0.152mm) PER SIDE

** DIMENSION DOES NOT INCLUDE INTERLEAD FLASH. INTERLEAD FLASH SHALL NOT EXCEED 0.010" (0.254mm) PER SIDE

GN24 (SSOP) 1098

TYPICAL APPLICATION

Low Cost Dual Supply with 2.5V Keepalive

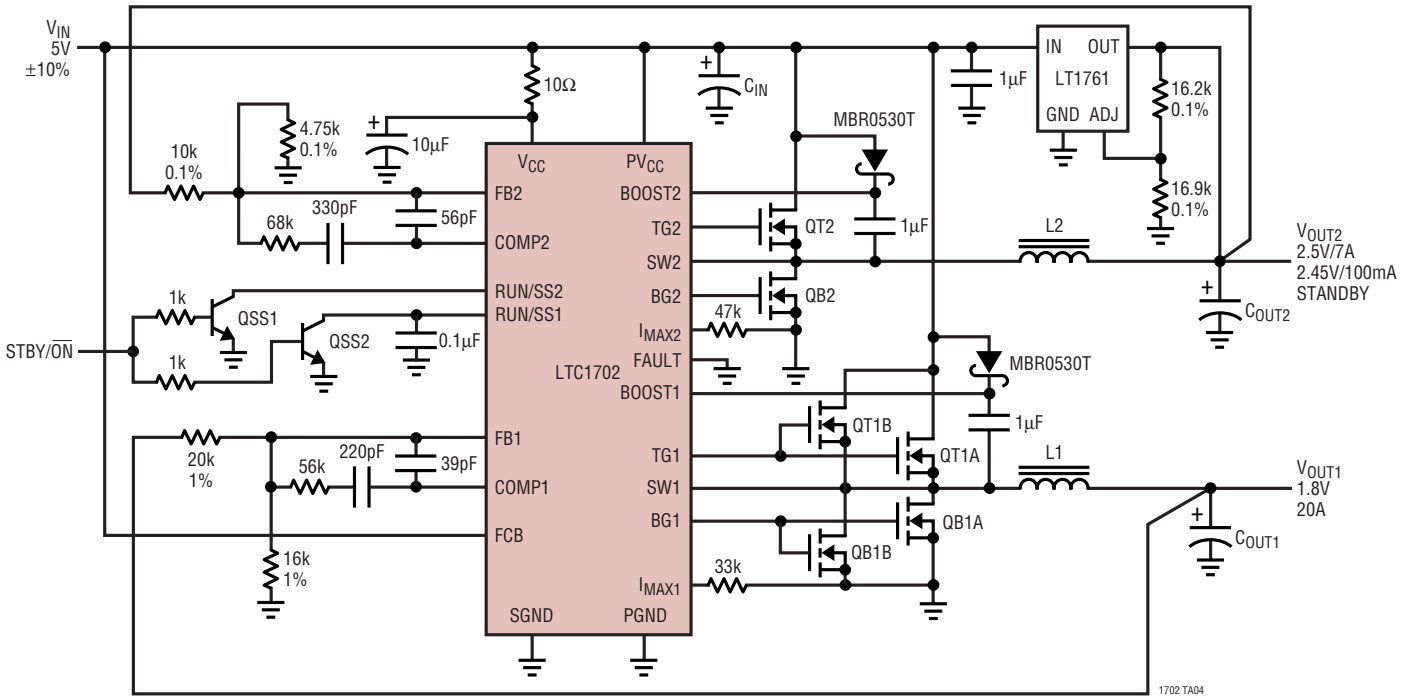

C_{IN} = SANYO 10MV1200GX (6 IN PARALLEL)
C_{OUT1} = SANYO 6MV1500GX (8 IN PARALLEL)
C_{OUT2} = SANYO 6MV1500GX (3 IN PARALLEL)
L1: 1µH SUMIDA CEP125-1R0MC-H
L2: 2.2µH COILTRONICS UP2B-2R2

QSS1, QSS2: MOTOROLA MMBT3904LT1
QT1A, QT1B, QB1A, QB1B: FAIRCHILD FDS6670A
QT2, QB2: 1/2 SILICONIX Si4966

RELATED PARTS

PART NUMBER	DESCRIPTION	COMMENTS
LTC1530	High Power Synchronous Step-Down Controller	SO-8 with Current Limit. No R_{SENSE} Required
LTC1625	No R_{SENSE}™ Current Mode Synchronous Step-Down Controller	Above 95% Efficiency, Needs No R_{SENSE}, 16-Lead SSOP Package Fits SO-8 Footprint
LTC1628	Dual High Efficiency 2-Phase Synchronous Step-Down Controller	Constant Frequency, Standby 5V and 3.3V LDOs, $3.5V \le V_{IN} \le 36V$
LTC1703	Dual 550kHz Synchronous 2-Phase Switching Regulator Controller with Mobile VID	LTC1702 with 5-Bit Mobile VID for Mobile Pentium® Processor Systems
LTC1706-81	VID Voltage Programmer	Adds 5-Bit Mobile VID to 0.8V Referenced Switching Regulators
LTC1709	2-Phase, 5-Bit Desktop VID Synchronous Step-Down Controller	Current Mode, V_{IN} to 36V, I_{OUT} Up to 42A
LTC1736	Synchronous Step-Down Controller with 5-Bit Mobile VID Control	Fault Protection, PowerGood, 3.5V to 36V Input, Current Mode
LTC1753	5-Bit Desktop VID Programmable Synchronous Switching Regulator	1.3V to 3.5V Programmable Output Using Internal 5-Bit DAC
LTC1873	Dual Synchronous Switching Regulator with 5-Bit Desktop VID	1.3V to 3.5V Programmable Core Output Plus I/O Output
LTC1929	2-Phase, Synchronous High Efficiency Converter	Current Mode Ensures Accurate Current Sensing, V_{IN} Up to 36V, I_{OUT} Up to 40A

No R_{SENSE} is a trademark of Linear Technology Corporation. Pentium is a registered trademark of Intel Corporation.