查询03040-01供应商

捷多邦，专业PCB打样工厂，24小时加急出货

VICOR CONFIDENTIAL

THIS DOCUMENT AND THE DATA DISCLOSED HEREIN OR HEREWITH IS NOT TO BE REPRODUCED, USED, OR DISCLOSED IN WHOLE OR IN PART TO ANYONE WITHOUT PERMISSION OF VICOR CORP.

REV.	DESCRIPTION	DATE	APPROVED
01	RELEASED PER E020225 PEI	5/3/02	GCK

ABSOLUTE MAXIMUM RATINGS:

Operating Ambient Temperature range (T_A) ..... -55 to + 85 °C
Storage Temperature Range (T_{STG}) ..... -55 to +125 °C
Temperature Coefficient (αV) of Clamping Voltage (VC) at Specified Test Current ..... <0.01 %/°C
Hi-Pot Encapsulation (Isolation Voltage Capability) ..... 2500 V
(Dielectric must withstand indicated DC voltage for one minute per MIL-STD-202 Method 301)
Insulation Resistance ..... 1000 MΩ

MAXIMUM RATING @ Ta = 85 °C

Parameter	Symbol	Test Condition		Units
Continuous AC Voltage	$V_{M(AC)RMS}$		250	V
Continuous DC Voltage	$V_{M(DC)}$		330	V
Transient Single Pulse Energy	W_{TM}	10 x 1000 μs current wave (1)	72	J
Transient Peak Pulse Current	I_{TM}	8 x 20 μs current wave	4500	A

(1) Average power dissipation of transients not to exceed 0.4W

ELECTRICAL SPECIFICATIONS @ Ta = 25 °C

Parameter	Symbol	Test Condition	Min	Typ	Max	Units
Varistor Voltage	V_{NOM}	1mA DC	354		429	V
Clamping Voltage	V_C	8 x 20 μs current wave			650	V
Peak Current at V_C	I_{PK}				50	A
Capacitance	C	f = 1MHz		500		pF

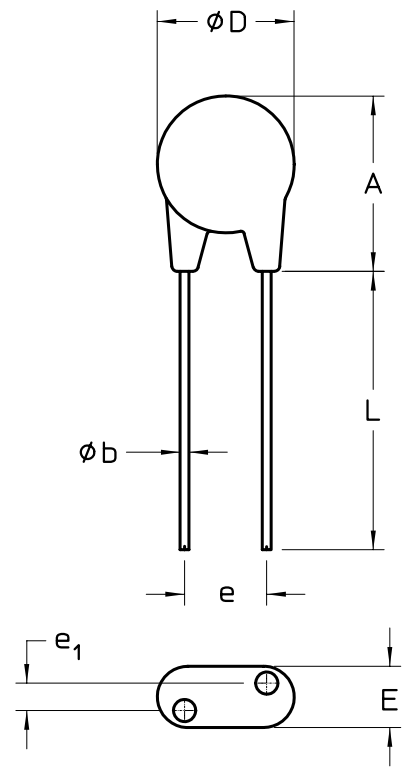

DIMENSIONS	MILLIMETER (INCHES) MIN	MAX
A	----	20 (.787)
Dia. D	----	17 (.669)
e	6.5 (.256)	8.5 (.335)
e_1	1.5 (.059)	3.5 (.138)
E	----	5.6 (.220)
Dia. b	.76 (.030)	.86 (.034)
L	25.4 (1.00)	----

DRAWN BY	DATE
D.P. KELLY	1/02

UNLESS OTHERWISE SPECIFIED DIMENSIONS ARE IN MM/[IN]- TOLERANCES ARE:
DECIMALS .XX= ± 0.254 [.01] .XXX= ± 0.127 [.005]
ANGLES ±1°

THIRD ANGLE PROJECTION

DO NOT SCALE DRAWING

VICOR

VARISTOR, RADIAL LEAD MOV, LINE-VOLTAGE

SIZE	FSCM NO.	DWG NO	REV
B	67131	03040	01

SCALE 2X SHEET 1 OF 1

找PDF 维库一下 pdf.dzsc.com