DATA SHEET

For a complete data sheet, please also download:

- The IC04 LOCMOS HE4000B Logic Family Specifications HEF, HEC
- The IC04 LOCMOS HE4000B Logic Package Outlines/Information HEF, HEC

HEF4093B
gates
Quadruple 2-input NAND Schmitt trigger

Product specification
File under Integrated Circuits, IC04

January 1995

Philips Semiconductors

PHILIPS

Quadruple 2-input NAND Schmitt trigger

HEF4093B gates

DESCRIPTION

The HEF4093B consists of four Schmitt-trigger circuits. Each circuit functions as a two-input NAND gate with Schmitt-trigger action on both inputs. The gate switches at different points for positive and negative-going signals. The difference between the positive voltage (V_P) and the negative voltage (V_N) is defined as hysteresis voltage (V_H).

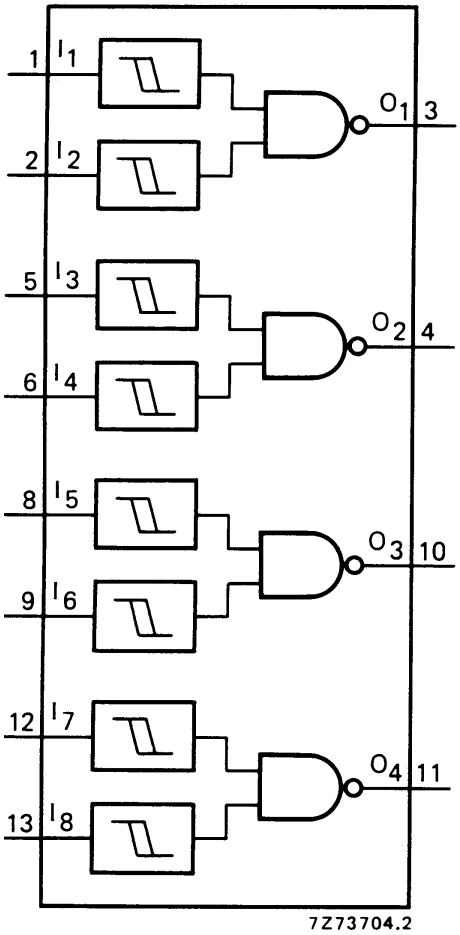

Fig.1 Functional diagram.

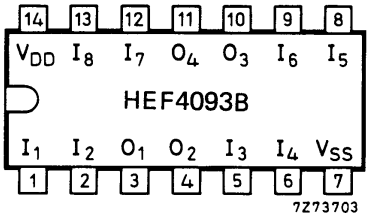

Fig.2 Pinning diagram.

HEF4093BP(N): 14-lead DIL; plastic (SOT27-1)

HEF4093BD(F): 14-lead DIL; ceramic (cerdip) (SOT73)

HEF4093BT(D): 14-lead SO; plastic (SOT108-1)

( ): Package Designator North America

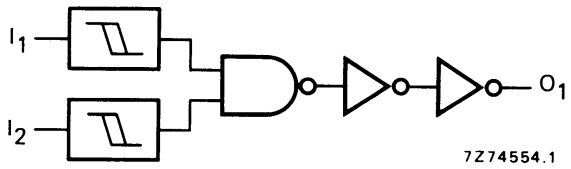

Fig.3 Logic diagram (one gate).

FAMILY DATA, I_{DD} LIMITS category GATES

See Family Specifications

DC CHARACTERISTICS

V_{SS} = 0 V; T_{amb} = 25 °C

	V_{DD} V	SYMBOL	MIN.	TYP.	MAX.	
Hysteresis	5		0,4	0,7	–	V
voltage	10	V_H	0,6	1,0	–	V
	15		0,7	1,3	–	V
Switching levels	5		1,9	2,9	3,5	V
positive-going	10	V_P	3,6	5,2	7	V
input voltage	15		4,7	7,3	11	V
negative-going	5		1,5	2,2	3,1	V
input voltage	10	V_N	3	4,2	6,4	V
	15		4	6,0	10,3	V

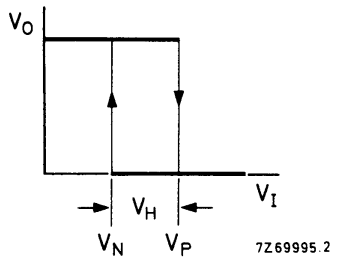

Fig.4 Transfer characteristic.

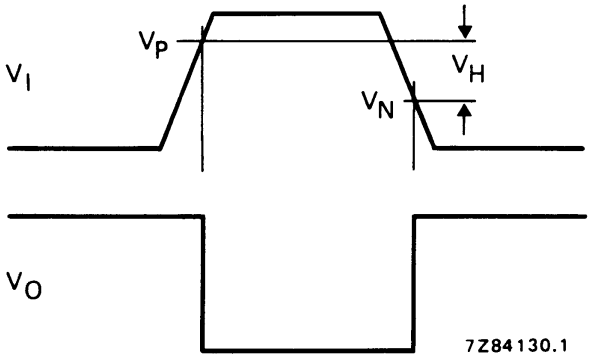

Fig.5 Waveforms showing definition of V_P, V_N and V_H; where V_N and V_P are between limits of 30% and 70%.

AC CHARACTERISTICS

V_{SS} = 0 V; T_{amb} = 25 °C; C_L = 50 pF; input transition times ≤ 20 ns

	V_{DD} V	SYMBOL	TYP.	MAX.		TYPICAL EXTRAPOLATION FORMULA
Propagation delays	5		90	185	ns	63 ns + (0,55 ns/pF) C_L
$I_n \rightarrow O_n$	10	t_{PHL}	40	80	ns	29 ns + (0,23 ns/pF) C_L
HIGH to LOW	15		30	60	ns	22 ns + (0,16 ns/pF) C_L
	5		85	170	ns	58 ns + (0,55 ns/pF) C_L
LOW to HIGH	10	t_{PLH}	40	80	ns	29 ns + (0,23 ns/pF) C_L
	15		30	60	ns	22 ns + (0,16 ns/pF) C_L
Output transition times	5		60	120	ns	10 ns + (1,0 ns/pF) C_L
HIGH to LOW	10	t_{THL}	30	60	ns	9 ns + (0,42 ns/pF) C_L
	15		20	40	ns	6 ns + (0,28 ns/pF) C_L
	5		60	120	ns	10 ns + (1,0 ns/pF) C_L
LOW to HIGH	10	t_{TLH}	30	60	ns	9 ns + (0,42 ns/pF) C_L
	15		20	40	ns	6 ns + (0,28 ns/pF) C_L

	V_{DD} V	TYPICAL FORMULA FOR P (μW)	
Dynamic power	5	$1300\ f_i + \sum(f_oC_L) \times V_{DD}^2$	where
dissipation per	10	$6400\ f_i + \sum(f_oC_L) \times V_{DD}^2$	f_i = input freq. (MHz)
package (P)	15	$18\ 700\ f_i + \sum(f_oC_L) \times V_{DD}^2$	f_o = output freq. (MHz)
			C_L = load capacitance (pF)
			$\sum(f_oC_L)$ = sum of outputs
			V_{DD} = supply voltage (V)

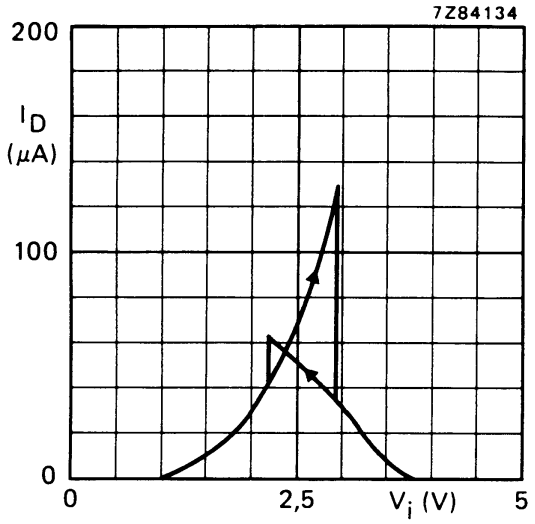

Fig.6 Typical drain current as a function of input voltage; V_{DD} = 5 V; T_{amb} = 25 °C.

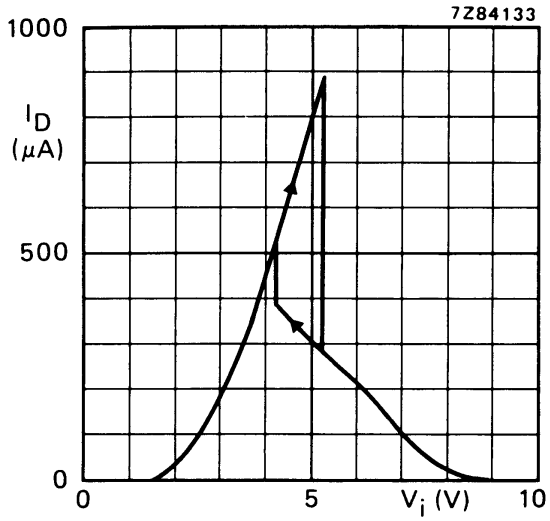

Fig.7 Typical drain current as a function of input voltage; V_{DD} =10 V; T_{amb} = 25 °C.

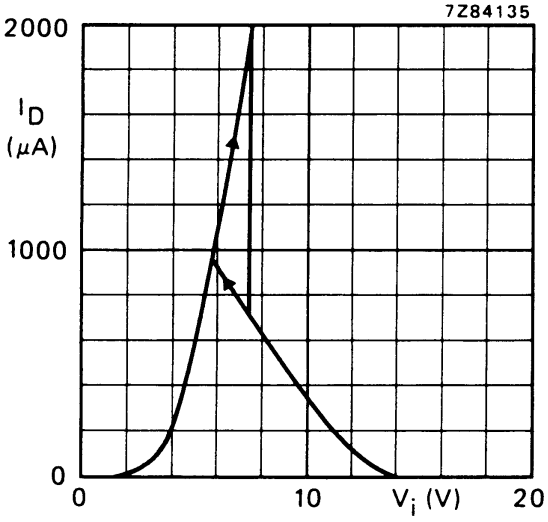

Fig.8 Typical drain current as a function of input voltage; V_{DD} = 15 V; T_{amb} = 25 °C.

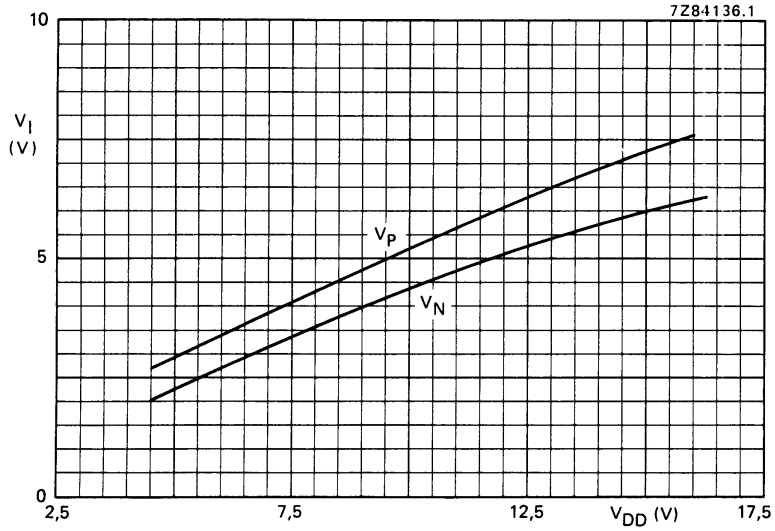

Fig.9 Typical switching levels as a function of supply voltage V_{DD}; T_{amb} = 25 °C.

APPLICATION INFORMATION

Some examples of applications for the HEF4093B are:

- Wave and pulse shapers
- Astable multivibrators
- Monostable multivibrators.

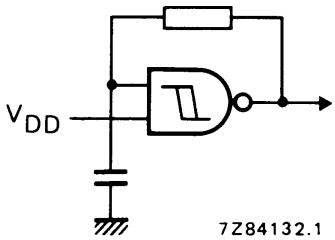

Fig.10 The HEF4093B used as a astable multivibrator.

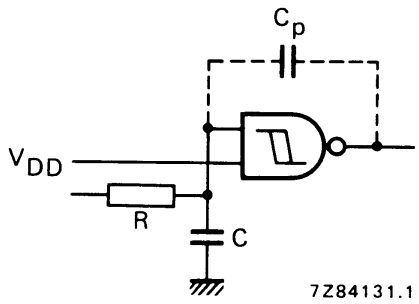

Fig.11 Schmitt trigger driven via a high impedance (R > 1 kΩ).

If a Schmitt trigger is driven via a high impedance (R > 1 kΩ) then it is necessary to incorporate a capacitor C of such value that:

$$\frac{C}{C_p} > \frac{V_{DD} - V_{SS}}{V_H}$$, otherwise oscillation can occur on the edges of a pulse.

C_p is the external parasitic capacitance between inputs and output; the value depends on the circuit board layout.

Note

The two inputs may be connected together, but this will result in a larger through-current at the moment of switching.