1:2 Differential Fanout Buffer

MC10EL11
MC100EL11

The MC10EL/100EL11 is a differential 1:2 fanout buffer. The device is functionally similar to the E111 device but with higher performance capabilities. Having within-device skews and output transition times significantly improved over the E111, the EL11 is ideally suited for those applications which require the ultimate in AC performance.

The differential inputs of the EL11 employ clamping circuitry to maintain stability under open input conditions. If the inputs are left open (pulled to V_{EE}) the Q outputs will go LOW.

- 265ps Propagation Delay
- 5ps Skew Between Outputs
- High Bandwidth Output Transitions
- 75kΩ Internal Input Pulldown Resistors
- >1000V ESD Protection

D SUFFIX
PLASTIC SOIC PACKAGE
CASE 751-05

LOGIC DIAGRAM AND PINOUT ASSIGNMENT

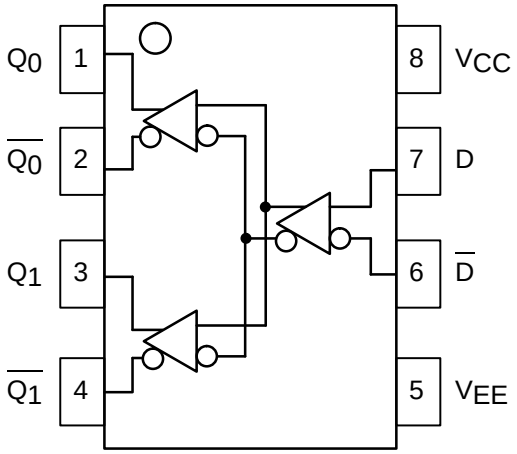

PIN DESCRIPTION

PIN	FUNCTION
D	Data Inputs
Q0, Q1	Data Outputs

© Motorola, Inc. 1996

DC CHARACTERISTICS (V_{EE} = V_{EE}(min) to V_{EE}(max); V_{CC} = GND)

Symbol	Characteristic	–40°C			0°C			25°C			85°C			Unit
		Min	Typ	Max	Min	Typ	Max	Min	Typ	Max	Min	Typ	Max	
I_{EE}	Power Supply Current 10EL 100EL		 26 26	 31 31		 26 26	 31 31		 26 26	 31 31		 26 30	 31 36	mA
V_{EE}	Power Supply Voltage 10EL 100EL	 –4.75 –4.20	 –5.2 –4.5	 –5.5 –5.5	 –4.75 –4.20	 –5.2 –4.5	 –5.5 –5.5	 –4.75 –4.20	 –5.2 –4.5	 –5.5 –5.5	 –4.75 –4.20	 –5.2 –4.5	 –5.5 –5.5	V
I_{IH}	Input HIGH Current			150			150			150			150	µA

AC CHARACTERISTICS (V_{EE} = V_{EE}(min) to V_{EE}(max); V_{CC} = GND)

Symbol	Characteristic	–40°C			0°C			25°C			85°C			Unit
		Min	Typ	Max	Min	Typ	Max	Min	Typ	Max	Min	Typ	Max	
t_{PLH} t_{PHL}	Propagation Delay to Output	135	260	385	185	260	335	190	265	340	215	290	365	ps
t_{SKEW}	Within-Device Skew[1] Duty Cycle Skew[2]		5 5			5 5	20 20		5 5	20 20		5 5	20 20	ps
V_{PP}	Minimum Input Swing[3]	150			150			150			150			mV
V_{CMR}	Common Mode Range[4]	–0.4		See[4]	–0.4		See[4]	–0.4		See[4]	–0.4		See[4]	V
t_r t_f	Output Rise/Fall Times Q (20% – 80%)	100	225	350	100	225	350	100	225	350	100	225	350	ps

1. Within-device skew defined as identical transitions on similar paths through a device.
2. Duty cycle skew is the difference between a TPLH and TPHL propagation delay through a device.
3. Minimum input swing for which AC parameters guaranteed. The device has a DC gain of ≈40.
4. The CMR range is referenced to the most positive side of the differential input signal. Normal operation is obtained if the HIGH level falls within the specified range and the peak-to-peak voltage lies between V_{PP}min and 1V. The lower end of the CMR range is dependent on V_{EE} and is equal to V_{EE} + 2.5V.

OUTLINE DIMENSIONS

D SUFFIX
PLASTIC SOIC PACKAGE
CASE 751–05
ISSUE P

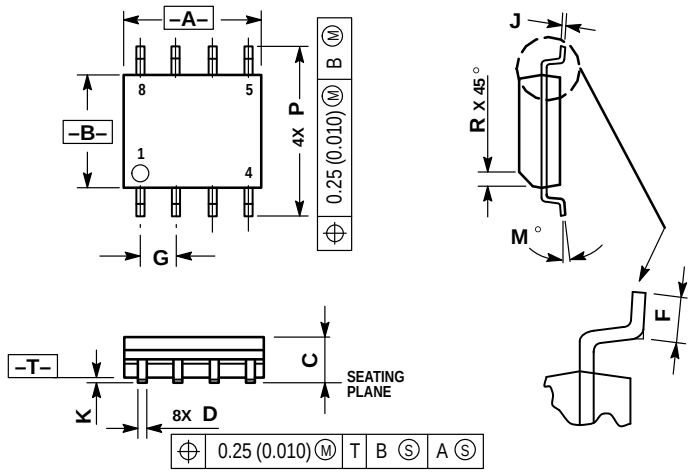

NOTES:
1. DIMENSIONS A AND B ARE DATUMS AND T IS A DATUM SURFACE.
2. DIMENSIONING AND TOLERANCING PER ANSI Y14.5M, 1982.
3. DIMENSIONS ARE IN MILLIMETER.
4. DIMENSION A AND B DO NOT INCLUDE MOLD PROTRUSION.
5. MAXIMUM MOLD PROTRUSION 0.15 PER SIDE.
6. DIMENSION D DOES NOT INCLUDE MOLD PROTRUSION. ALLOWABLE DAMBAR PROTRUSION SHALL BE 0.127 TOTAL IN EXCESS OF THE D DIMENSION AT MAXIMUM MATERIAL CONDITION.

	MILLIMETERS	
DIM	MIN	MAX
A	4.80	5.00
B	3.80	4.00
C	1.35	1.75
D	0.35	0.49
F	0.40	1.25
G	1.27 BSC	
J	0.18	0.25
K	0.10	0.25
M	0°	7°
P	5.80	6.20
R	0.25	0.50

Motorola reserves the right to make changes without further notice to any products herein. Motorola makes no warranty, representation or guarantee regarding the suitability of its products for any particular purpose, nor does Motorola assume any liability arising out of the application or use of any product or circuit, and specifically disclaims any and all liability, including without limitation consequential or incidental damages. “Typical” parameters which may be provided in Motorola data sheets and/or specifications can and do vary in different applications and actual performance may vary over time. All operating parameters, including “Typicals” must be validated for each customer application by customer’s technical experts. Motorola does not convey any license under its patent rights nor the rights of others. Motorola products are not designed, intended, or authorized for use as components in systems intended for surgical implant into the body, or other applications intended to support or sustain life, or for any other application in which the failure of the Motorola product could create a situation where personal injury or death may occur. Should Buyer purchase or use Motorola products for any such unintended or unauthorized application, Buyer shall indemnify and hold Motorola and its officers, employees, subsidiaries, affiliates, and distributors harmless against all claims, costs, damages, and expenses, and reasonable attorney fees arising out of, directly or indirectly, any claim of personal injury or death associated with such unintended or unauthorized use, even if such claim alleges that Motorola was negligent regarding the design or manufacture of the part. Motorola and Ⓜ are registered trademarks of Motorola, Inc. Motorola, Inc. is an Equal Opportunity/Affirmative Action Employer.

How to reach us:
USA / EUROPE / Locations Not Listed: Motorola Literature Distribution;
P.O. Box 20912; Phoenix, Arizona 85036. 1–800–441–2447 or 602–303–5454

MFAX: RMFAX0@email.sps.mot.com – TOUCHTONE 602–244–6609
INTERNET: http://Design–NET.com

JAPAN: Nippon Motorola Ltd.; Tatsumi–SPD–JLDC, 6F Seibu–Butsuryu–Center,
3–14–2 Tatsumi Koto–Ku, Tokyo 135, Japan. 03–81–3521–8315

ASIA / PACIFIC: Motorola Semiconductors H.K. Ltd.; 8B Tai Ping Industrial Park,
51 Ting Kok Road, Tai Po, N.T., Hong Kong. 852–26629298

WWW.ALLDATASHEET.COM

Copyright © Each Manufacturing Company.

All Datasheets cannot be modified without permission.

This datasheet has been download from :

www.AllDataSheet.com

100% Free DataSheet Search Site.

Free Download.

No Register.

Fast Search System.

www.AllDataSheet.com