Triple Line Receiver

MC10H116

The MC10H116 is a functional/pinout duplication of the MC10116, with 100% improvement in propagation delay and no increase in power– supply current.

- Propagation Delay, 1.0 ns Typical
- Power Dissipation 85 mW Typ/Pkg (same as MECL 10K)
- Improved Noise Margin 150 mV (Over Operating Voltage and Temperature Range)
- Voltage Compensated
- MECL 10K–Compatible

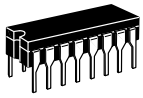

L SUFFIX
CERAMIC PACKAGE
CASE 620–10

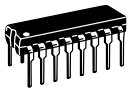

P SUFFIX
PLASTIC PACKAGE
CASE 648–08

D SUFFIX
PLASTIC SOIC
CASE 751B–05

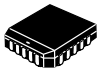

FN SUFFIX
PLCC
CASE 775–02

MAXIMUM RATINGS

Characteristic	Symbol	Rating	Unit
Power Supply (V_{CC} = 0)	V_{EE}	–8.0 to 0	Vdc
Input Voltage (V_{CC} = 0)	V_I	0 to V_{EE}	Vdc
Output Current — Continuous — Surge	I_{out}	50 100	mA
Operating Temperature Range	T_A	0 to +75	°C
Storage Temperature Range — Plastic — Ceramic	T_{stg}	–55 to +150 –55 to +165	°C °C

ELECTRICAL CHARACTERISTICS (V_{EE} = –5.2 V ±5%) (2)

Characteristic	Symbol	0°		25°		75°		Unit
		Min	Max	Min	Max	Min	Max	
Power Supply Current	I_E	—	23	—	21	—	23	mA
Input Current High	I_{inH}	—	150	—	95	—	95	µA
Input Leakage Current	I_{CBO}	—	1.5	—	1.0	—	1.0	µA
Reference Voltage	V_{BB}	–1.38	–1.27	–1.35	–1.25	–1.31	–1.19	Vdc
High Output Voltage	V_{OH}	–1.02	–0.84	–0.98	–0.81	–0.92	–0.735	Vdc
Low Output Voltage	V_{OL}	–1.95	–1.63	–1.95	–1.63	–1.95	–1.60	Vdc
High Input Voltage (1)	V_{IH}	–1.17	–0.84	–1.13	–0.81	–1.07	–0.735	Vdc
Low Input Voltage (1)	V_{IL}	–1.95	–1.48	–1.95	–1.48	–1.95	–1.45	Vdc
Common Mode Range (3)	V_{CMR}	—	—	–2.85 to –0.8		—	—	Vdc
Input Sensitivity (4)	V_{PP}	—	—	150 typ		—	—	mV_{PP}

AC PARAMETERS

Propagation Delay	t_{pd}	0.4	1.3	0.4	1.3	0.45	1.45	ns
Rise Time	t_r	0.5	1.5	0.5	1.6	0.5	1.7	ns
Fall Time	t_f	0.5	1.5	0.5	1.6	0.5	1.7	ns

NOTES:
1. When V_{BB} is used as the reference voltage.
2. Each MECL 10H series circuit has been designed to meet the specifications shown in the test table, after thermal equilibrium has been established. The circuit is in a test socket or mounted on a printed circuit board and transverse air flow greater than 500 linear fpm is maintained. Outputs are terminated through a 50–ohm resistor to –2.0 volts.
3. Differential input not to exceed 1.0 Vdc.
4. 150 mV_{p-p} differential input required to obtain full logic swing on output.

LOGIC DIAGRAM

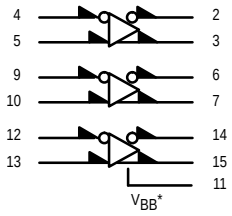

V_{CC1} = Pin 1
V_{CC2} = Pin 16
V_{EE} = Pin 8

When input pin with bubble goes positive it's respective output pin with bubble goes positive.

*V_{BB} to be used to supply bias to the MC10H116 only and bypassed (when used) with 0.01 µF to 0.1 µF capacitor to ground (0 V). V_{BB} can source < 1.0 mA.

The MC10H116 is designed to be used in sensing differential signals over long lines. The bias supply (V_{BB}) is made available to make the device useful as a Schmitt trigger, or in other applications where a stable reference voltage is necessary.

Active current sources provide these receivers with excellent common–mode noise rejection. If any amplifier in a package is not used, one input of that amplifier must be connected to V_{BB} to prevent unbalancing the current–source bias network.

The MC10H116 does not have internal–input pull-down resistors. This provides high impedance to the amplifier input and facilitates differential connections.

Applications:
- Low Level Receiver
- Schmitt Trigger
- Voltage Level Interface

DIP PIN ASSIGNMENT

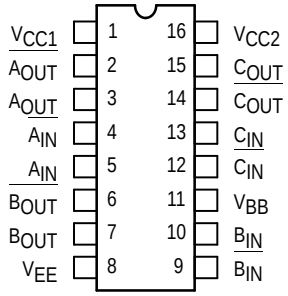

Pin assignment is for Dual–in–Line Package.
For PLCC pin assignment, see the Pin Conversion Tables on page 6–11 of the Motorola MECL Data Book (DL122/D).

© Motorola, Inc. 1996

OUTLINE DIMENSIONS

FN SUFFIX
PLASTIC PLCC PACKAGE
CASE 775–02
ISSUE C

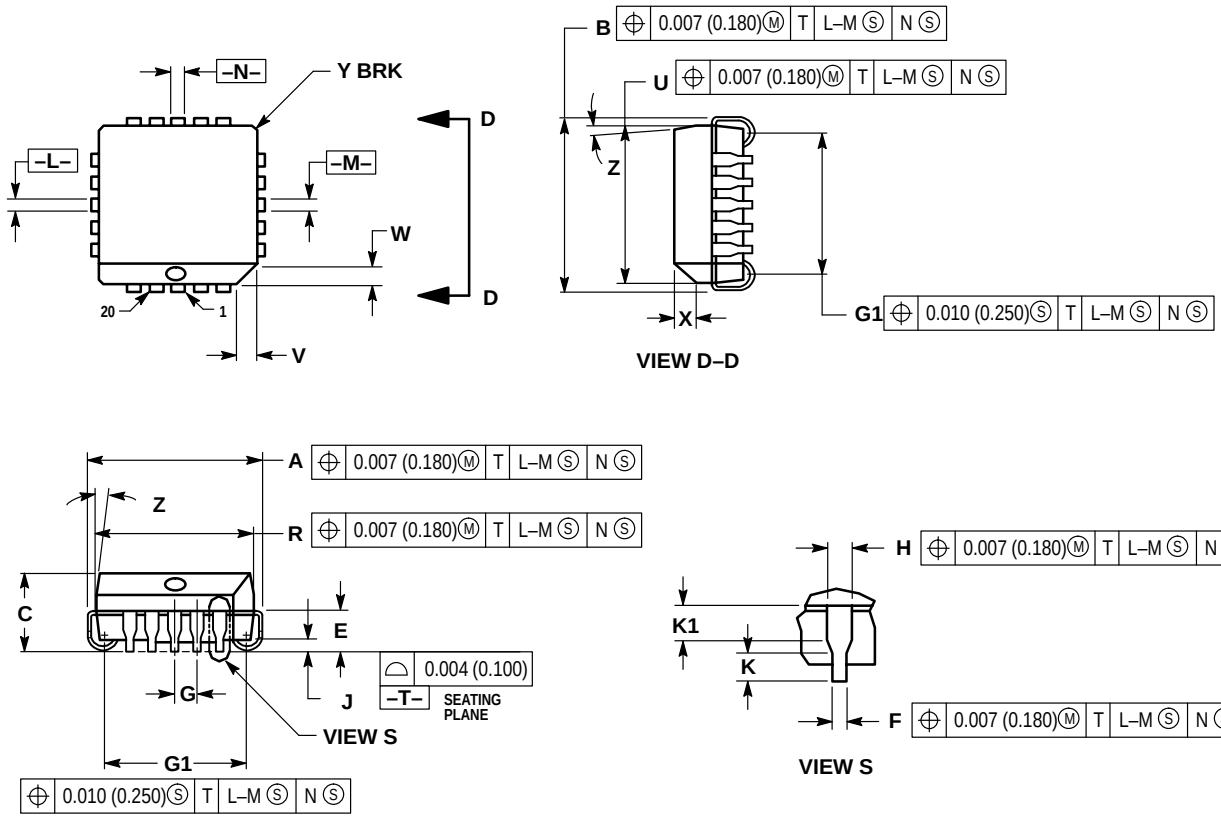

NOTES:
1. DATUMS –L–, –M–, AND –N– DETERMINED WHERE TOP OF LEAD SHOULDER EXITS PLASTIC BODY AT MOLD PARTING LINE.
2. DIMENSION G1, TRUE POSITION TO BE MEASURED AT DATUM –T–, SEATING PLANE.
3. DIMENSIONS R AND U DO NOT INCLUDE MOLD FLASH. ALLOWABLE MOLD FLASH IS 0.010 (0.250) PER SIDE.
4. DIMENSIONING AND TOLERANCING PER ANSI Y14.5M, 1982.
5. CONTROLLING DIMENSION: INCH.
6. THE PACKAGE TOP MAY BE SMALLER THAN THE PACKAGE BOTTOM BY UP TO 0.012 (0.300). DIMENSIONS R AND U ARE DETERMINED AT THE OUTERMOST EXTREMES OF THE PLASTIC BODY EXCLUSIVE OF MOLD FLASH, TIE BAR BURRS, GATE BURRS AND INTERLEAD FLASH, BUT INCLUDING ANY MISMATCH BETWEEN THE TOP AND BOTTOM OF THE PLASTIC BODY.
7. DIMENSION H DOES NOT INCLUDE DAMBAR PROTRUSION OR INTRUSION. THE DAMBAR PROTRUSION(S) SHALL NOT CAUSE THE H DIMENSION TO BE GREATER THAN 0.037 (0.940). THE DAMBAR INTRUSION(S) SHALL NOT CAUSE THE H DIMENSION TO BE SMALLER THAN 0.025 (0.635).

	INCHES		MILLIMETERS	
DIM	MIN	MAX	MIN	MAX
A	0.385	0.395	9.78	10.03
B	0.385	0.395	9.78	10.03
C	0.165	0.180	4.20	4.57
E	0.090	0.110	2.29	2.79
F	0.013	0.019	0.33	0.48
G	0.050 BSC		1.27 BSC	
H	0.026	0.032	0.66	0.81
J	0.020	—	0.51	—
K	0.025	—	0.64	—
R	0.350	0.356	8.89	9.04
U	0.350	0.356	8.89	9.04
V	0.042	0.048	1.07	1.21
W	0.042	0.048	1.07	1.21
X	0.042	0.056	1.07	1.42
Y	—	0.020	—	0.50
Z	2°	10°	2°	10°
G1	0.310	0.330	7.88	8.38
K1	0.040	—	1.02	—

OUTLINE DIMENSIONS

L SUFFIX
CERAMIC DIP PACKAGE
CASE 620–10
ISSUE V

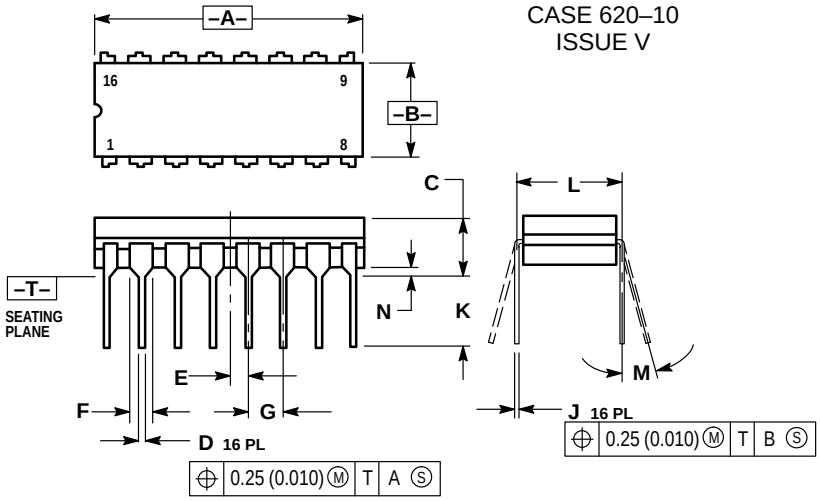

NOTES:
1. DIMENSIONING AND TOLERANCING PER ANSI Y14.5M, 1982.
2. CONTROLLING DIMENSION: INCH.
3. DIMENSION L TO CENTER OF LEAD WHEN FORMED PARALLEL.
4. DIMENSION F MAY NARROW TO 0.76 (0.030) WHERE THE LEAD ENTERS THE CERAMIC BODY.

	INCHES		MILLIMETERS	
DIM	MIN	MAX	MIN	MAX
A	0.750	0.785	19.05	19.93
B	0.240	0.295	6.10	7.49
C	—	0.200	—	5.08
D	0.015	0.020	0.39	0.50
E	0.050 BSC		1.27 BSC	
F	0.055	0.065	1.40	1.65
G	0.100 BSC		2.54 BSC	
H	0.008	0.015	0.21	0.38
K	0.125	0.170	3.18	4.31
L	0.300 BSC		7.62 BSC	
M	0°	15°	0°	15°
N	0.020	0.040	0.51	1.01

P SUFFIX
PLASTIC DIP PACKAGE
CASE 648–08
ISSUE R

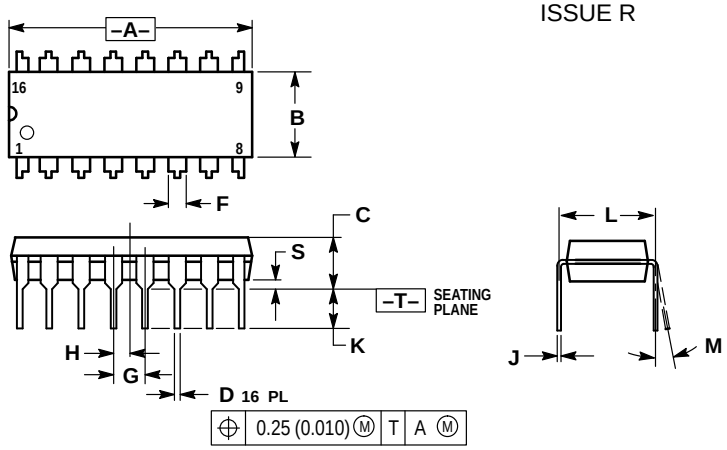

NOTES:
1. DIMENSIONING AND TOLERANCING PER ANSI Y14.5M, 1982.
2. CONTROLLING DIMENSION: INCH.
3. DIMENSION L TO CENTER OF LEADS WHEN FORMED PARALLEL.
4. DIMENSION B DOES NOT INCLUDE MOLD FLASH.
5. ROUNDED CORNERS OPTIONAL.

	INCHES		MILLIMETERS	
DIM	MIN	MAX	MIN	MAX
A	0.740	0.770	18.80	19.55
B	0.250	0.270	6.35	6.85
C	0.145	0.175	3.69	4.44
D	0.015	0.021	0.39	0.53
F	0.040	0.70	1.02	1.77
G	0.100 BSC		2.54 BSC	
H	0.050 BSC		1.27 BSC	
J	0.008	0.015	0.21	0.38
K	0.110	0.130	2.80	3.30
L	0.295	0.305	7.50	7.74
M	0°	10°	0°	10°
S	0.020	0.040	0.51	1.01

OUTLINE DIMENSIONS

D SUFFIX
PLASTIC SOIC PACKAGE
CASE 751B–05
ISSUE J

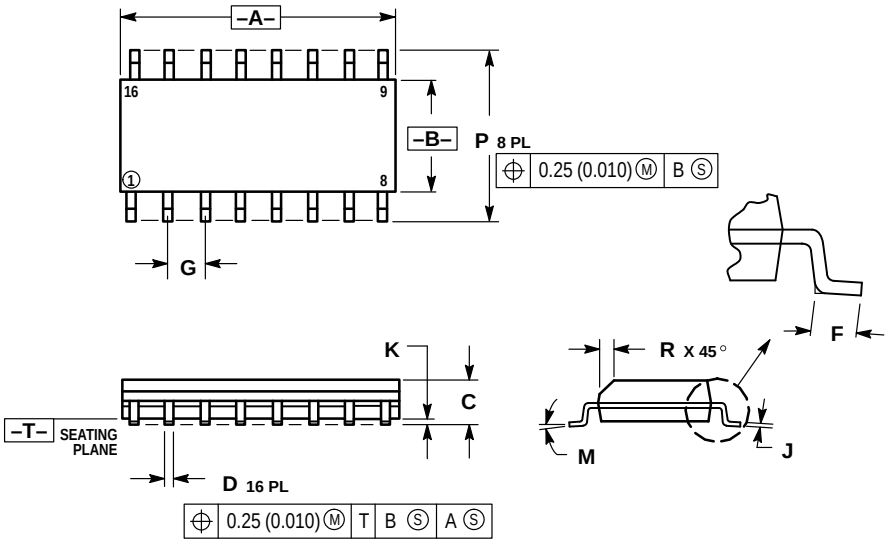

NOTES:
1. DIMENSIONING AND TOLERANCING PER ANSI Y14.5M, 1982.
2. CONTROLLING DIMENSION: MILLIMETER.
3. DIMENSIONS A AND B DO NOT INCLUDE MOLD PROTRUSION.
4. MAXIMUM MOLD PROTRUSION 0.15 (0.006) PER SIDE.
5. DIMENSION D DOES NOT INCLUDE DAMBAR PROTRUSION. ALLOWABLE DAMBAR PROTRUSION SHALL BE 0.127 (0.005) TOTAL IN EXCESS OF THE D DIMENSION AT MAXIMUM MATERIAL CONDITION.

	MILLIMETERS		INCHES	
DIM	MIN	MAX	MIN	MAX
A	9.80	10.00	0.386	0.393
B	3.80	4.00	0.150	0.157
C	1.35	1.75	0.054	0.068
D	0.35	0.49	0.014	0.019
F	0.40	1.25	0.016	0.049
G	1.27 BSC		0.050 BSC	
J	0.19	0.25	0.008	0.009
K	0.10	0.25	0.004	0.009
M	0°	7°	0°	7°
P	5.80	6.20	0.229	0.244
R	0.25	0.50	0.010	0.019

Motorola reserves the right to make changes without further notice to any products herein. Motorola makes no warranty, representation or guarantee regarding the suitability of its products for any particular purpose, nor does Motorola assume any liability arising out of the application or use of any product or circuit, and specifically disclaims any and all liability, including without limitation consequential or incidental damages. “Typical” parameters which may be provided in Motorola data sheets and/or specifications can and do vary in different applications and actual performance may vary over time. All operating parameters, including “Typicals” must be validated for each customer application by customer’s technical experts. Motorola does not convey any license under its patent rights nor the rights of others. Motorola products are not designed, intended, or authorized for use as components in systems intended for surgical implant into the body, or other applications intended to support or sustain life, or for any other application in which the failure of the Motorola product could create a situation where personal injury or death may occur. Should Buyer purchase or use Motorola products for any such unintended or unauthorized application, Buyer shall indemnify and hold Motorola and its officers, employees, subsidiaries, affiliates, and distributors harmless against all claims, costs, damages, and expenses, and reasonable attorney fees arising out of, directly or indirectly, any claim of personal injury or death associated with such unintended or unauthorized use, even if such claim alleges that Motorola was negligent regarding the design or manufacture of the part. Motorola and Ⓜ are registered trademarks of Motorola, Inc. Motorola, Inc. is an Equal Opportunity/Affirmative Action Employer.

How to reach us:
USA / EUROPE / Locations Not Listed: Motorola Literature Distribution;
P.O. Box 20912; Phoenix, Arizona 85036. 1–800–441–2447 or 602–303–5454

MFAX: RMFAX0@email.sps.mot.com – TOUCHTONE 602–244–6609
INTERNET: http://Design–NET.com

JAPAN: Nippon Motorola Ltd.; Tatsumi–SPD–JLDC, 6F Seibu–Butsuryu–Center,
3–14–2 Tatsumi Koto–Ku, Tokyo 135, Japan. 03–81–3521–8315

ASIA / PACIFIC: Motorola Semiconductors H.K. Ltd.; 8B Tai Ping Industrial Park,
51 Ting Kok Road, Tai Po, N.T., Hong Kong. 852–26629298

WWW.ALLDATASHEET.COM

Copyright © Each Manufacturing Company.

All Datasheets cannot be modified without permission.

This datasheet has been download from :

www.AllDataSheet.com

100% Free DataSheet Search Site.

Free Download.

No Register.

Fast Search System.

www.AllDataSheet.com