AO4496

30V N-Channel MOSFET

General Description

The AO4496 uses advanced trench technology to provide excellent $R_{DS(ON)}$ with low gate charge. This device is suitable for use as a DC-DC converter application.

Features

V_{DS} (V) = 30V

I_D = 10A (V_{GS} = 10V)

$R_{DS(ON)}$ < 19.5mΩ (V_{GS} = 10V)

$R_{DS(ON)}$ < 26mΩ (V_{GS} = 4.5V)

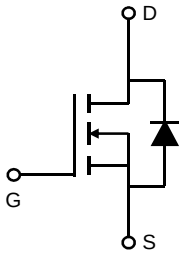

Absolute Maximum Ratings T_J=25°C unless otherwise noted				
Parameter		**Symbol**	**Maximum**	**Units**
Drain-Source Voltage		V_{DS}	30	V
Gate-Source Voltage		V_{GS}	±20	V
Continuous Drain Current [A]	T_A=25°C	I_D	10	A
	T_A=70°C		7.5	
Pulsed Drain Current [B]		I_{DM}	50	
Avalanche Current [G]		I_{AR}	17	
Repetitive avalanche energy L=0.1mH [G]		E_{AR}	14	mJ
Power Dissipation [A]	T_A=25°C	P_D	3.1	W
	T_A=70°C		2.0	
Junction and Storage Temperature Range		T_J, T_{STG}	-55 to 150	°C

Thermal Characteristics					
Parameter		**Symbol**	**Typ**	**Max**	**Units**
Maximum Junction-to-Ambient [A]	t ≤ 10s	$R_{\theta JA}$	31	40	°C/W
Maximum Junction-to-Ambient [A]	Steady State		59	75	°C/W
Maximum Junction-to-Lead [C]	Steady State	$R_{\theta JL}$	16	24	°C/W

Electrical Characteristics (T_J=25°C unless otherwise noted)

Symbol	Parameter	Conditions	Min	Typ	Max	Units
STATIC PARAMETERS						
BV_{DSS}	Drain-Source Breakdown Voltage	I_D = 250µA, V_{GS} = 0V	30			V
I_{DSS}	Zero Gate Voltage Drain Current	V_{DS} = 30V, V_{GS} = 0V			1	µA
		T_J = 55°C			5	
I_{GSS}	Gate-Body leakage current	V_{DS} = 0V, V_{GS} = ±20V			±100	nA
$V_{GS(th)}$	Gate Threshold Voltage	V_{DS} = V_{GS} I_D = 250µA	1.4	1.8	2.5	V
$I_{D(ON)}$	On state drain current	V_{GS} = 10V, V_{DS} = 5V	50			A
$R_{DS(ON)}$	Static Drain-Source On-Resistance	V_{GS} = 10V, I_D = 10A		16	19.5	mΩ
		T_J=125°C		24	29	
		V_{GS} = 4.5V, I_D = 7.5A		21	26	
g_{FS}	Forward Transconductance	V_{DS} = 5V, I_D = 10A		30		S
V_{SD}	Diode Forward Voltage	I_S = 1A,V_{GS} = 0V		0.76	1	V
I_S	Maximum Body-Diode Continuous Current				3	A
DYNAMIC PARAMETERS						
C_{iss}	Input Capacitance	V_{GS}=0V, V_{DS}=15V, f=1MHz		550	715	pF
C_{oss}	Output Capacitance			110		pF
C_{rss}	Reverse Transfer Capacitance			55		pF
R_g	Gate resistance	V_{GS}=0V, V_{DS}=0V, f=1MHz	3	4	4.9	Ω
SWITCHING PARAMETERS						
Q_g (10V)	Total Gate Charge	V_{GS}=10V, V_{DS}=15V, I_D=10A		9.8	13	nC
Q_g (4.5V)	Total Gate Charge			4.6	6.1	nC
Q_{gs}	Gate Source Charge			1.8		nC
Q_{gd}	Gate Drain Charge			2.2		nC
$t_{D(on)}$	Turn-On DelayTime	V_{GS}=10V, V_{DS}=15V, R_L= 1.5Ω, R_{GEN}=3Ω		5		ns
t_r	Turn-On Rise Time			3.2		ns
$t_{D(off)}$	Turn-Off DelayTime			24		ns
t_f	Turn-Off Fall Time			6		ns
t_{rr}	Body Diode Reverse Recovery Time	I_F=10A, dI/dt=500A/µs		22	29	ns
Q_{rr}	Body Diode Reverse Recovery Charge	I_F=10A, dI/dt=500A/µs		14		nC

A: The value of $R_{\theta JA}$ is measured with the device mounted on 1in^2 FR-4 board with 2oz. Copper, in a still air environment with T_A = 25° C. The value in any given application depends on the user's specific board design.
B: Repetitive rating, pulse width limited by junction temperature.
C. The $R_{\theta JA}$ is the sum of the thermal impedence from junction to lead $R_{\theta JL}$ and lead to ambient.
D. The static characteristics in Figures 1 to 6 are obtained using t ≤ 300µs pulses, duty cycle 0.5% max.
E. These tests are performed with the device mounted on 1 in^2 FR-4 board with 2oz. Copper, in a still air environment with T_A=25° C. The SOA curve provides a single pulse rating.
F. The current rating is based on the t ≤ 10s thermal resistance rating.
G. E_{AR} and I_{AR} ratings are based on low frequency and duty cycles to keep T_j=25C.
Rev5: Nov. 2010

THIS PRODUCT HAS BEEN DESIGNED AND QUALIFIED FOR THE CONSUMER MARKET. APPLICATIONS OR USES AS CRITICAL COMPONENTS IN LIFE SUPPORT DEVICES OR SYSTEMS ARE NOT AUTHORIZED. AOS DOES NOT ASSUME ANY LIABILITY ARISING OUT OF SUCH APPLICATIONS OR USES OF ITS PRODUCTS. AOS RESERVES THE RIGHT TO IMPROVE PRODUCT DESIGN, FUNCTIONS AND RELIABILITY WITHOUT NOTICE.

TYPICAL ELECTRICAL AND THERMAL CHARACTERISTICS

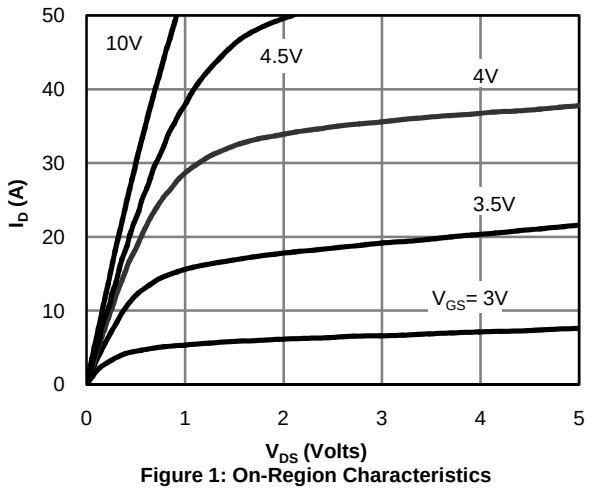

Figure 1: On-Region Characteristics

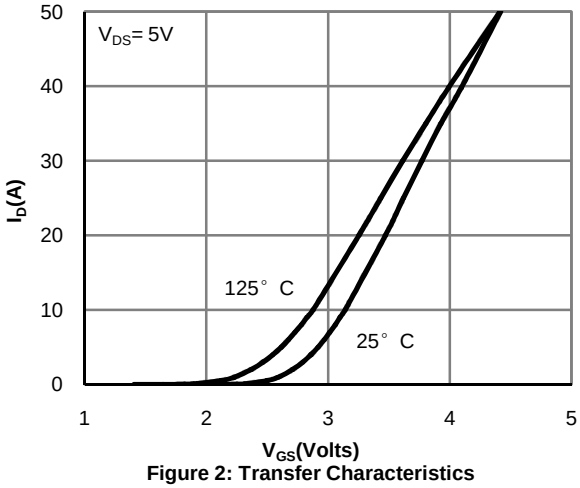

Figure 2: Transfer Characteristics

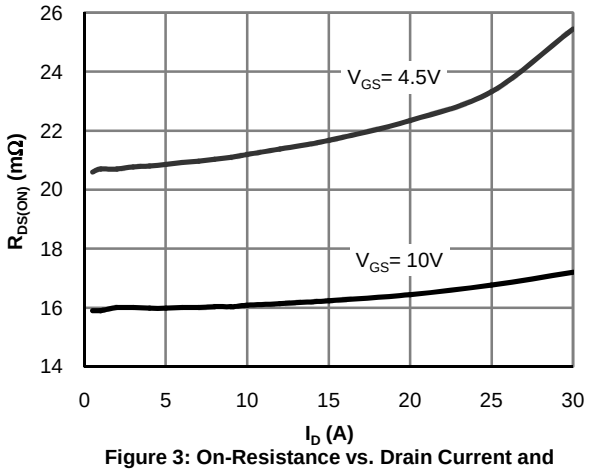

Figure 3: On-Resistance vs. Drain Current and Gate Voltage

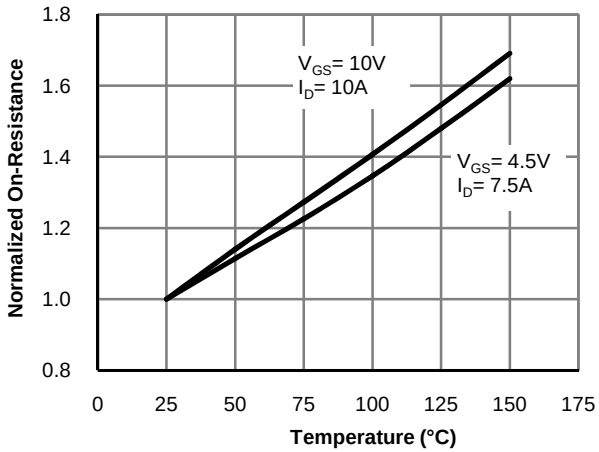

Figure 4: On-Resistance vs. Junction Temperature

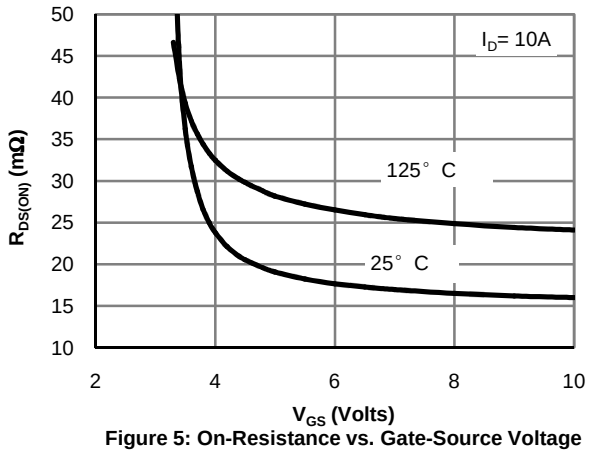

Figure 5: On-Resistance vs. Gate-Source Voltage

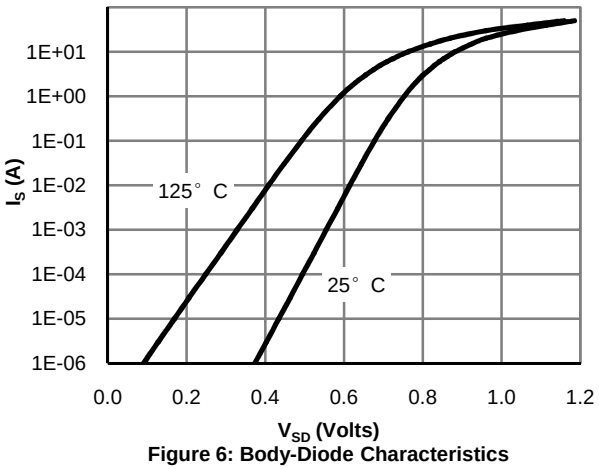

Figure 6: Body-Diode Characteristics

TYPICAL ELECTRICAL AND THERMAL CHARACTERISTICS

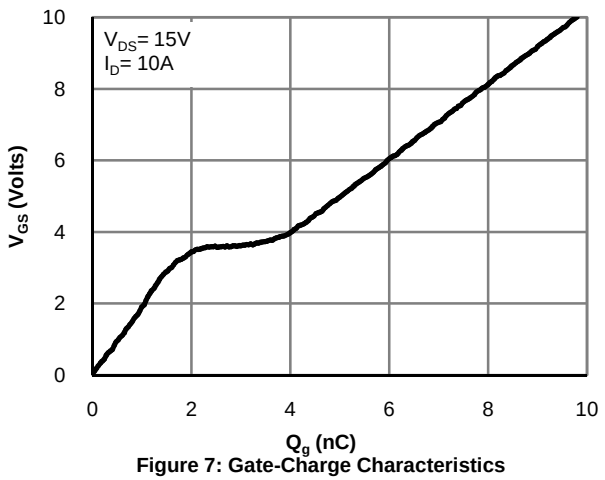

Figure 7: Gate-Charge Characteristics

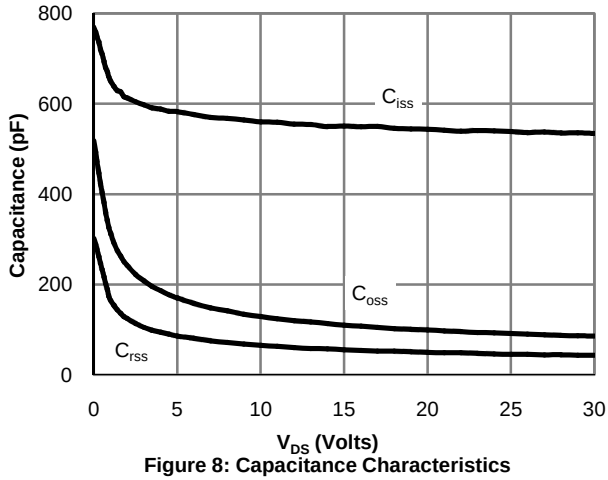

Figure 8: Capacitance Characteristics

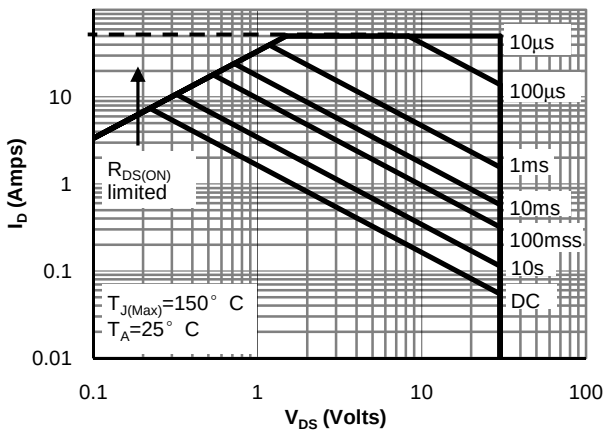

Figure 9: Maximum Forward Biased Safe Operating Area (Note E)

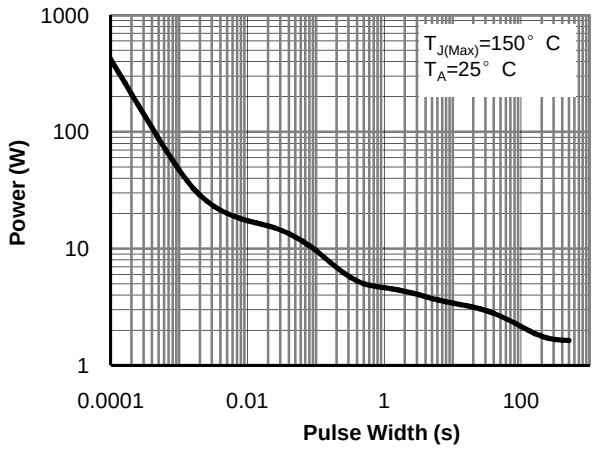

Figure 10: Single Pulse Power Rating Junction-to-Ambient (Note E)

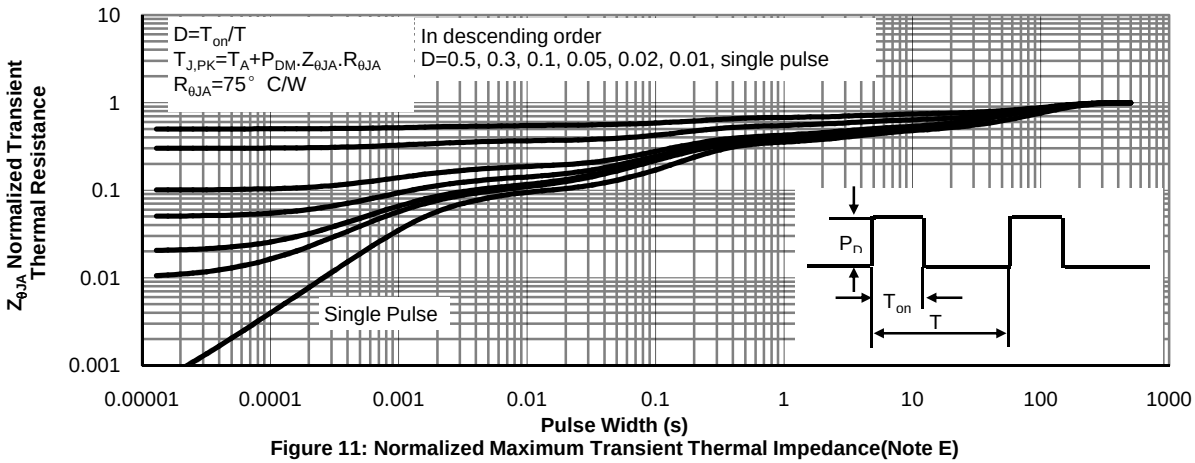

Figure 11: Normalized Maximum Transient Thermal Impedance(Note E)

Gate Charge Test Circuit & Waveform

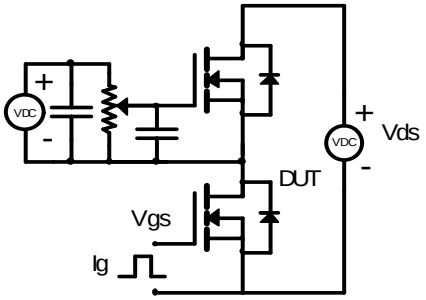

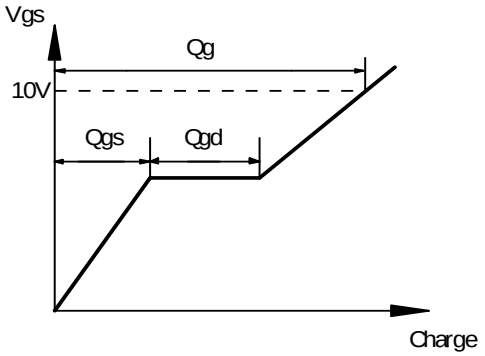

Resistive Switching Test Circuit & Waveforms

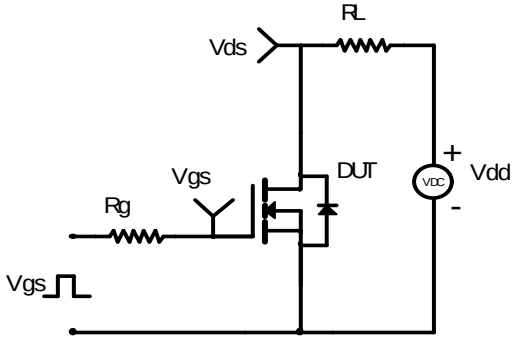

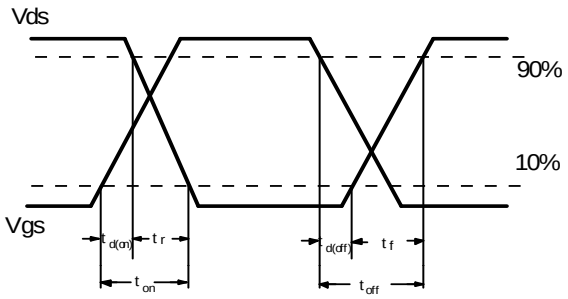

Unclamped Inductive Switching (UIS) Test Circuit & Waveforms

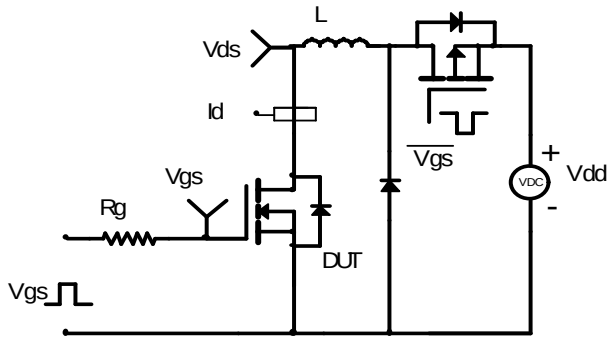

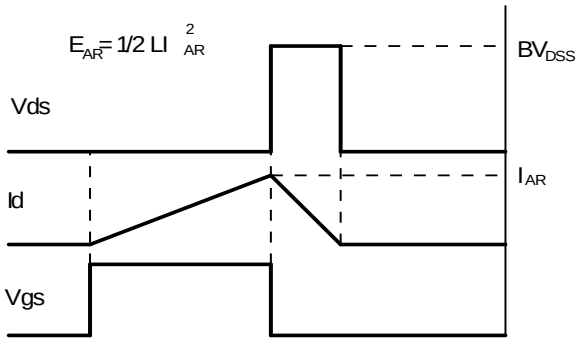
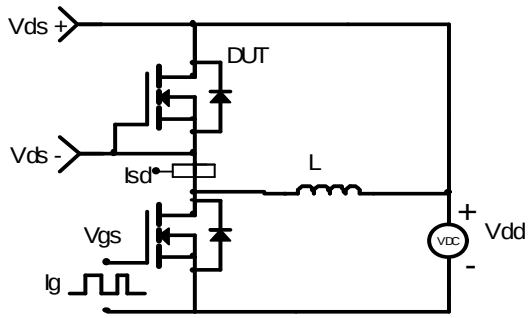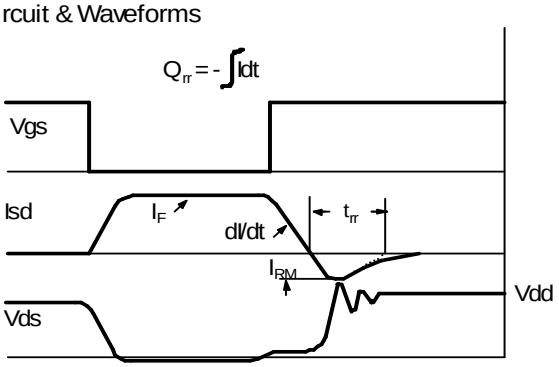
Diode Recovery Test Circuit & Waveforms