HEXFET® Power MOSFET

- Advanced Process Technology
- Ultra Low On-Resistance
- Dynamic dv/dt Rating
- 175°C Operating Temperature
- Fast Switching
- Fully Avalanche Rated
- 100% R_G Tested

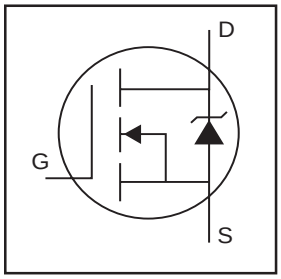

V_{DSS} = 30V

$R_{DS(on)}$ = 7.0mΩ

I_D = 116A⑦

Description

Advanced HEXFET® Power MOSFETs from International Rectifier utilize advanced processing techniques to achieve extremely low on-resistance per silicon area. This benefit, combined with the fast switching speed and ruggedized device design that HEXFET power MOSFETs are well known for, provides the designer with an extremely efficient and reliable device for use in a wide variety of applications.

The D^2Pak is a surface mount power package capable of accommodating die sizes up to HEX-4. It provides the highest power capability and the lowest possible on-resistance in any existing surface mount package. The D^2Pak is suitable for high current applications because of its low internal connection resistance and can dissipate up to 2.0W in a typical surface mount application. The through-hole version (IRL2203NL) is available for low-profile applications.

D^2Pak
IRL2203NS

TO-262
IRL2203NL

Absolute Maximum Ratings

Symbol	Parameter	Max	Units
I_D @ T_C = 25°C	Continuous Drain Current, V_{GS} @ 10V	116 ⑦	A
I_D @ T_C = 100°C	Continuous Drain Current, V_{GS} @ 10V	82	
I_{DM}	Pulsed Drain Current ①	400	
P_D @T_A = 25°C	Power Dissipation	3.8	W
P_D @T_C = 25°C	Power Dissipation	180	W
	Linear Derating Factor	1.2	W/°C
V_{GS}	Gate-to-Source Voltage	± 16	V
I_{AR}	Avalanche Current ①	60	A
E_{AR}	Repetitive Avalanche Energy ①	18	mJ
dv/dt	Peak Diode Recovery dv/dt ③	5.0	V/ns
T_J	Operating Junction and Storage Temperature Range	-55 to + 175	°C
T_{STG}	Soldering Temperature, for 10 seconds	300 (1.6mm from case)	

Thermal Resistance

Symbol	Parameter	Typ	Max	Units
$R_{\theta JC}$	Junction-to-Case ⑨	——	0.85	°C/W
$R_{\theta JA}$	Junction-to-Ambient (PCB mount, steady state) ⑧⑨	——	40	

Electrical Characteristics @ T_J = 25°C (unless otherwise specified)

Symbol	Parameter	Min	Typ	Max	Units	Conditions
$V_{(BR)DSS}$	Drain-to-Source Breakdown Voltage	30	—	—	V	V_{GS} = 0V, I_D = 250μA
$\Delta V_{(BR)DSS}/\Delta T_J$	Breakdown Voltage Temp. Coefficient	—	0.029	—	V/°C	Reference to 25°C, I_D = 1mA
$R_{DS(on)}$	Static Drain-to-Source On-Resistance	—	—	7.0		V_{GS} = 10V, I_D = 60A ④
		—	—	10		V_{GS} = 4.5V, I_D = 48A ④
$V_{GS(th)}$	Gate Threshold Voltage	1.0	—	3.0	V	V_{DS} = V_{GS}, I_D = 250μA
g_{fs}	Forward Transconductance	73	—	—	S	V_{DS} = 25V, I_D = 60A ④
I_{DSS}	Drain-to-Source Leakage Current	—	—	25	μA	V_{DS} = 30V, V_{GS} = 0V
		—	—	250		V_{DS} = 24V, V_{GS} = 0V, T_J = 125°C
I_{GSS}	Gate-to-Source Forward Leakage	—	—	100	nA	V_{GS} = 16V
	Gate-to-Source Reverse Leakage	—	—	-100		V_{GS} = -16V
Q_g	Total Gate Charge	—	—	60	nC	I_D = 60A
Q_{gs}	Gate-to-Source Charge	—	—	14		V_{DS} = 24V
Q_{gd}	Gate-to-Drain ("Miller") Charge	—	—	33		V_{GS} = 4.5V, See Fig. 6 and 13
R_G	Gate Resistance	0.2	—	3.0	Ω	
$t_{d(on)}$	Turn-On Delay Time	—	11	—		V_{DD} = 15V
t_r	Rise Time	—	160	—		I_D = 60A
$t_{d(off)}$	Turn-Off Delay Time	—	23	—		R_G = 1.8Ω
t_f	Fall Time	—	66	—		V_{GS} = 4.5V, See Fig. 10 ④
L_D	Internal Drain Inductance	—	4.5	—	Nh	Between lead, 6mm (0.25in.) from package and center of die contact
L_S	Internal Source Inductance	—	7.5	—		
C_{iss}	Input Capacitance	—	3290	—	pF	V_{GS} = 0V
C_{oss}	Output Capacitance	—	1270	—		V_{DS} = 25V
C_{rss}	Reverse Transfer Capacitance	—	170	—		f = 1.0MHz, See Fig. 5
E_{AS}	Single Pulse Avalanche Energy ②	—	1320 ⑤	290 ⑥	mJ	I_{AS} = 60A, L = 0.16mH

Source-Drain Ratings and Characteristics

Symbol	Parameter	Min	Typ	Max	Units	Conditions
I_S	Continuous Source Current (Body Diode)	—	—	116 ⑦	A	MOSFET symbol showing the integral reverse p-n junction diode. 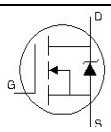
I_{SM}	Pulsed Source Current (Body Diode) ①	—	—	400		
V_{SD}	Diode Forward Voltage	—	—	1.2	V	T_J = 25°C, I_S = 60A, V_{GS} = 0V ④
t_{rr}	Reverse Recovery Time	—	56	84	ns	T_J = 25°C, I_F = 60A
Q_{rr}	Reverse Recovery Charge	—	110	170	nC	di/dt = 100A/μs ④
t_{on}	Forward Turn-On Time	Intrinsic turn-on time is negligible (turn-on is dominated by LS+LD)				

Notes:

① Repetitive rating; pulse width limited by max. junction temperature. (See fig. 11)

② Starting T_J = 25°C, L = 0.16mH R_G = 25Ω, I_{AS} = 60A, V_{GS}=10V (See Figure 12)

③ $I_{SD} \leq$ 60A, di/dt $\leq$ 110A/μs, $V_{DD} \leq V_{(BR)DSS}$, $T_J \leq$ 175°C

④ Pulse width $\leq$ 400μs; duty cycle $\leq$ 2%.

⑤ This is a typical value at device destruction and represents operation outside rated limits.

⑥ This is a calculated value limited to T_J = 175°C .

⑦ Calculated continuous current based on maximum allowable junction temperature. Package limitation current is 75A.

⑧ When mounted on 1" square PCB (FR-4 or G-10 Material). For recommended footprint and soldering techniques refer to application note #AN-994.

⑨ R_θ is measured at T_J approximately 90°C

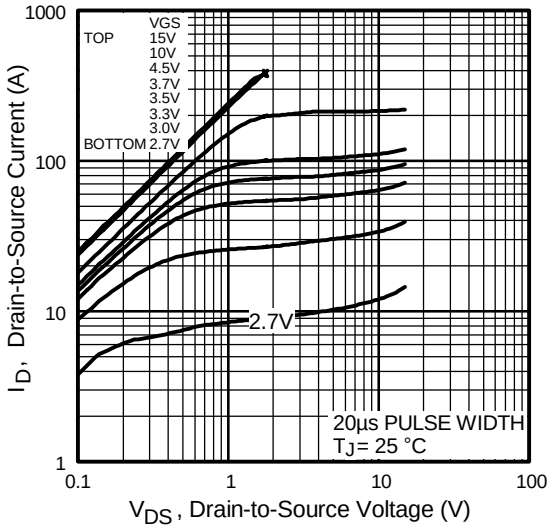

Fig 1. Typical Output Characteristics

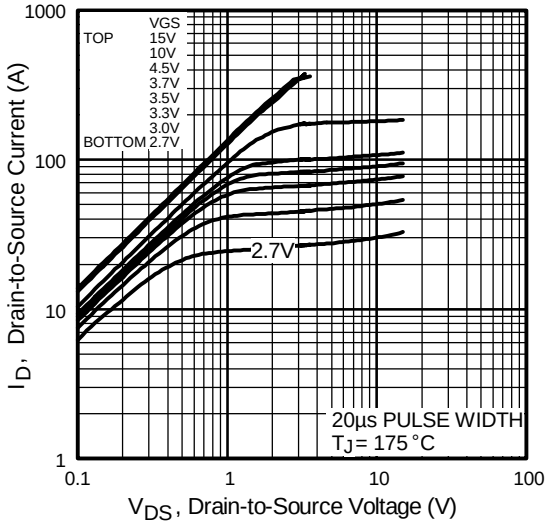

Fig 2. Typical Output Characteristics

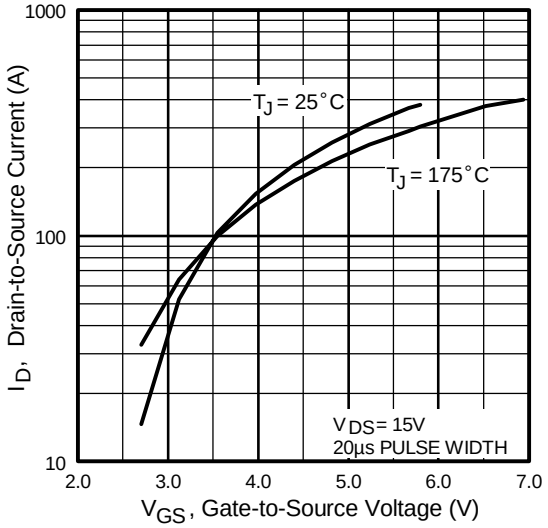

Fig 3. Typical Transfer Characteristics

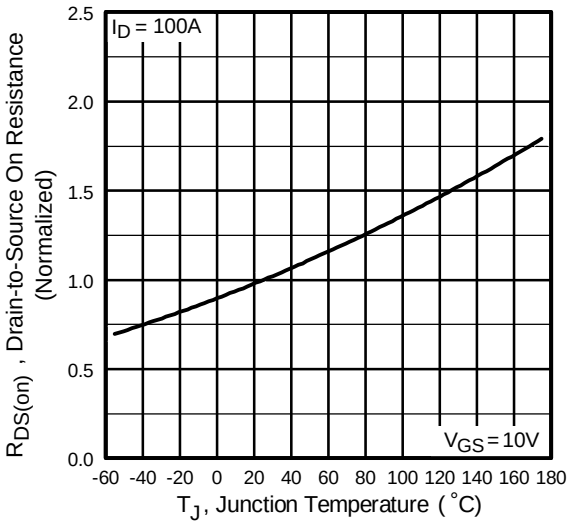

Fig 4. Normalized On-Resistance Vs. Temperature

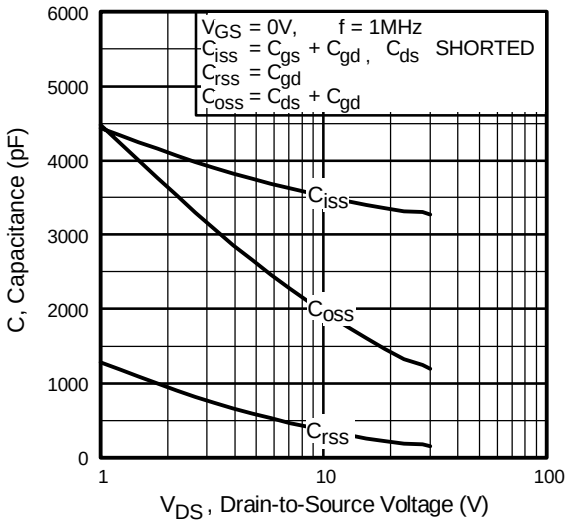

Fig 5. Typical Capacitance Vs. Drain-to-Source Voltage

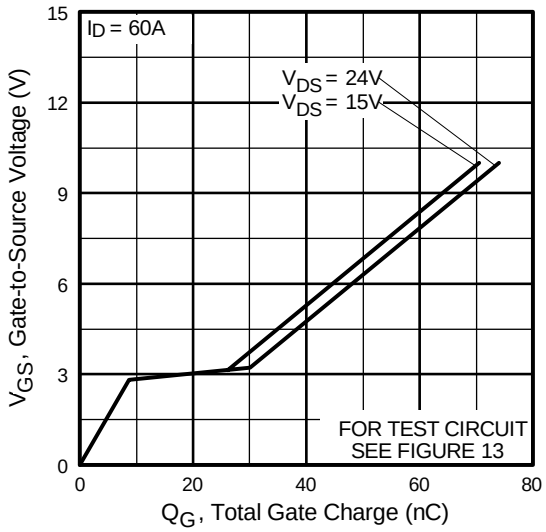

Fig 6. Typical Gate Charge Vs. Gate-to-Source Voltage

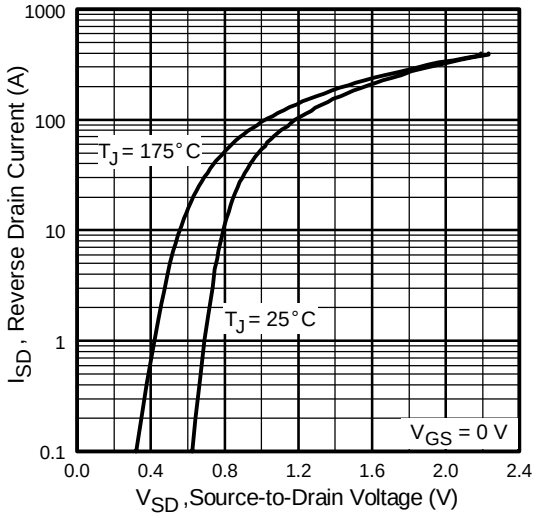

Fig 7. Typical Source-Drain Diode Forward Voltage

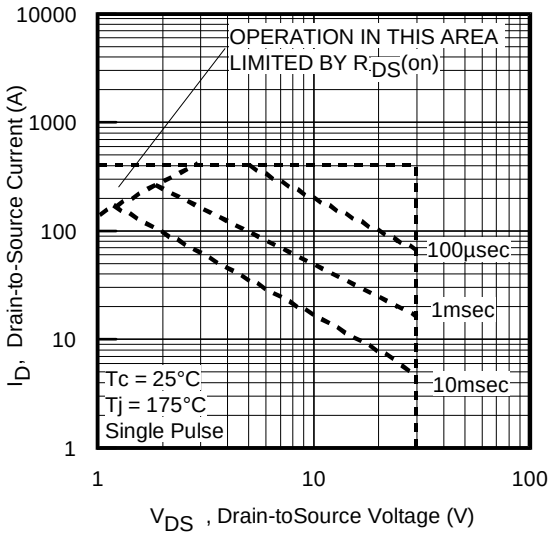

Fig 8. Maximum Safe Operating Area

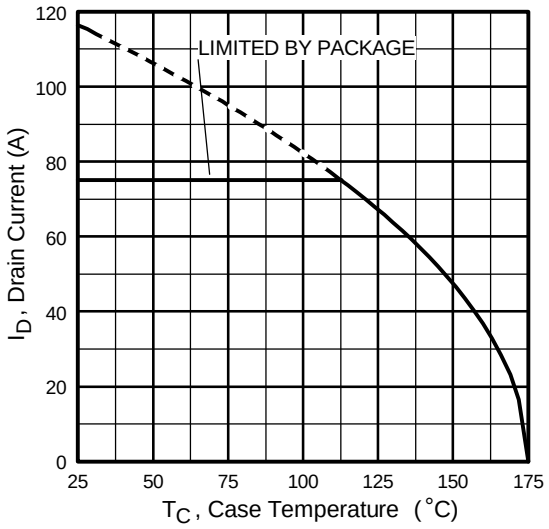

Fig 9. Maximum Drain Current Vs. Case Temperature

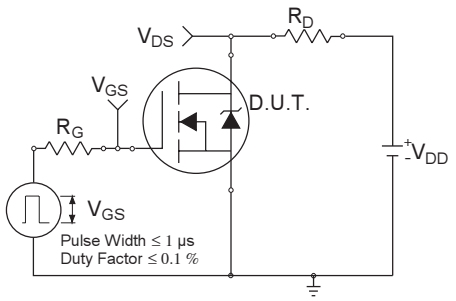

Fig 10a. Switching Time Test Circuit

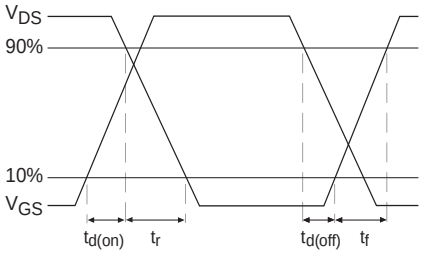

Fig 10b. Switching Time Waveforms

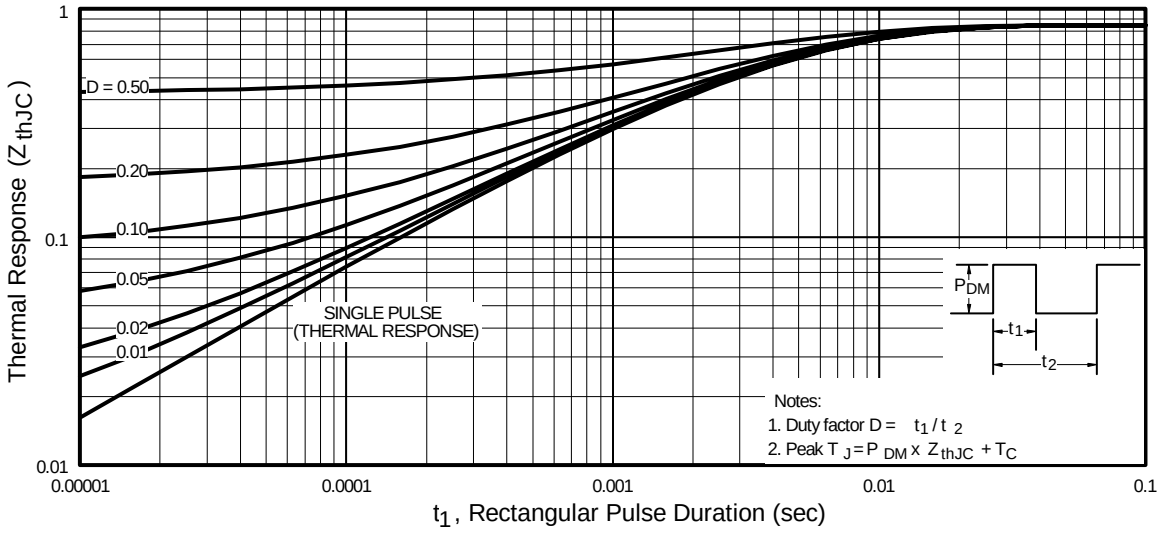

Fig 11. Maximum Effective Transient Thermal Impedance, Junction-to-Case

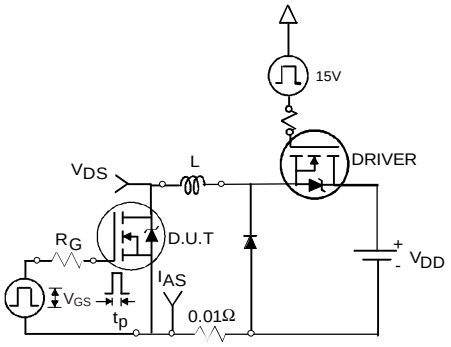

Fig 12a. Unclamped Inductive Test Circuit

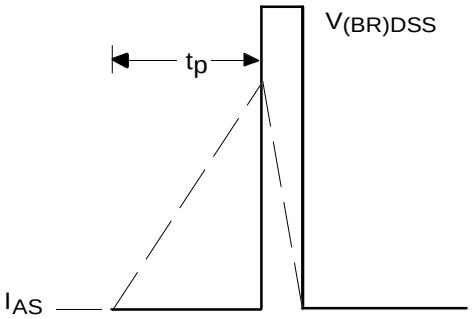

Fig 12b. Unclamped Inductive Waveforms

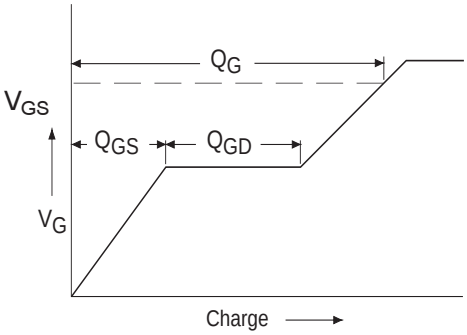

Fig 13a. Basic Gate Charge Waveform

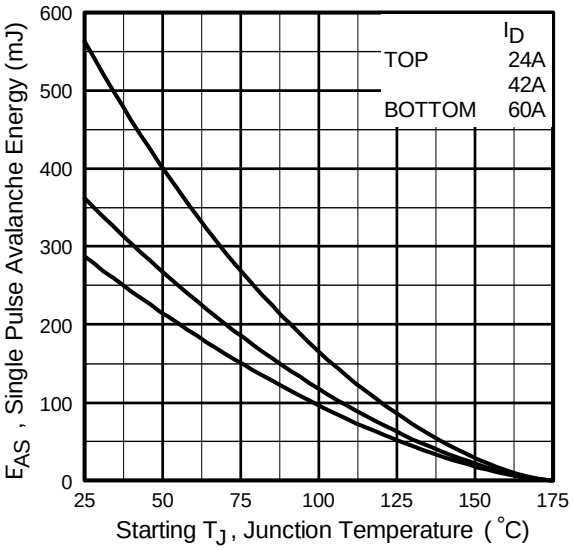

Fig 12c. Maximum Avalanche Energy Vs. Drain Current

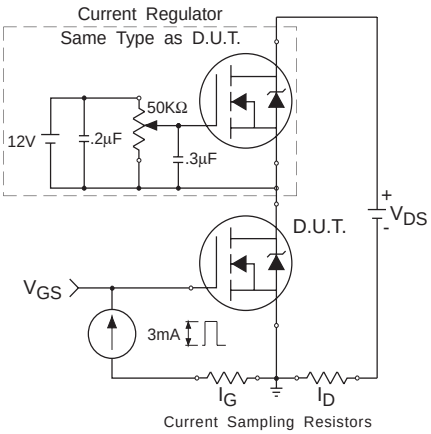

Fig 13b. Gate Charge Test Circuit

Peak Diode Recovery dv/dt Test Circuit

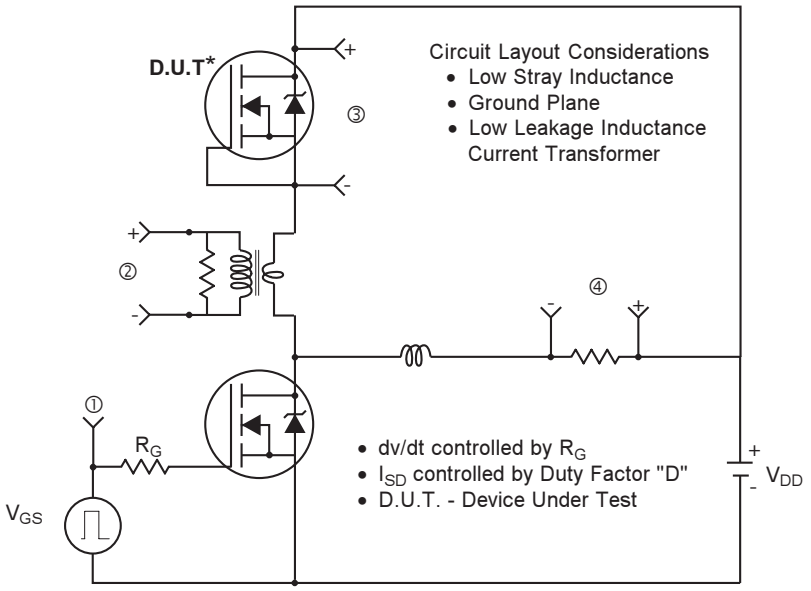

* Reverse Polarity of D.U.T for P-Channel

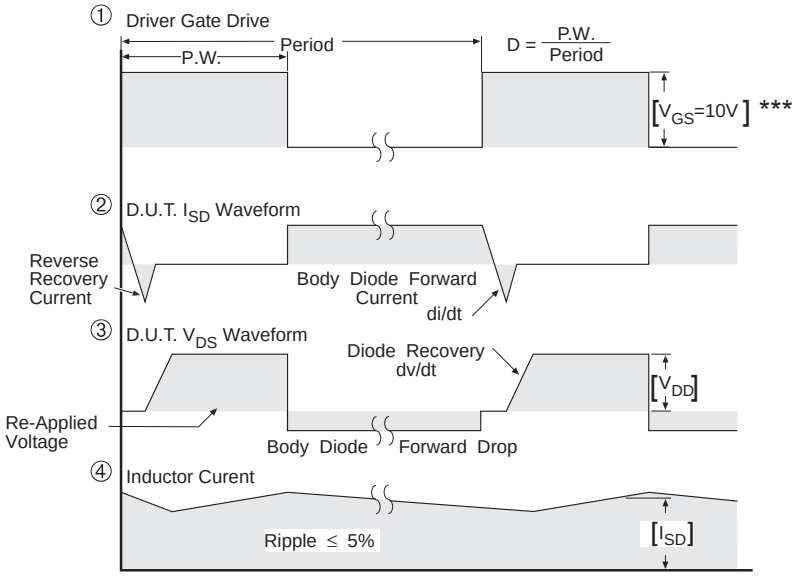

*** V_{GS} = 5.0V for Logic Level and 3V Drive Devices

Fig 14. For N-channel HEXFET® power MOSFETs

D^{2}Pak Package Outline

Dimensions are shown in millimeters (inches)

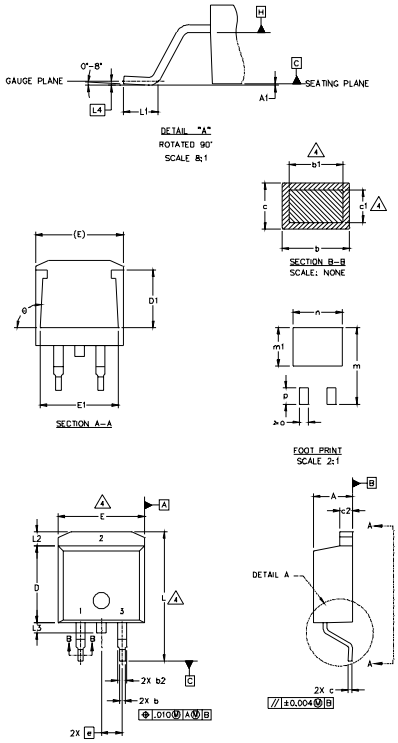

SYMBOL	DIMENSIONS MILLIMETERS MIN.	MILLIMETERS MAX.	INCHES MIN.	INCHES MAX.	NOTES
A	4.06	4.83	.160	.190	
A1		0.127		.005	
b	0.51	0.99	.020	.039	
b1	0.51	0.89	.020	.035	4
b2	1.14	1.40	.045	.055	
c	0.43	0.63	.017	.025	
c1	0.38	0.74	.015	.029	4
c2	1.14	1.40	.045	.055	
D	8.51	9.65	.335	.380	3
D1	5.33		.210		
E	9.65	10.67	.380	.420	3
E1	6.22		.245		
e	2.54 BSC		.100 BSC		
L	14.61	15.88	.575	.625	
L1	1.78	2.79	.070	.110	
L2		1.65		.065	
L3	1.27	1.78	.050	.070	
L4	0.25 BSC		.010 BSC		
m	17.78		.700		
m1	8.89		.350		
n	11.43		.450		
o	2.08		.082		
p	3.81		.150		
θ	90°	93°	90°	93°	

LEAD ASSIGNMENTS

HEXFET	IGBTs, CoPACK	DIODES
1.- GATE	1.- GATE	1.- ANODE *
2.- DRAIN	2.- COLLECTOR	2.- CATHODE
3.- SOURCE	3.- EMITTER	3.- ANODE

* PART DEPENDENT.

NING AND TOLERANCING PER ASME Y14.5M-1994

INS ARE SHOWN IN MILLIMETERS [INCHES].

IN D & E DO NOT INCLUDE MOLD FLASH. MOLD FLASH SHALL NOT EXCEED 0.127 [.005"]
E. THESE DIMENSIONS ARE MEASURED AT THE OUTMOST EXTREMES OF THE PLASTIC BODY.

IN b1 AND c1 APPLY TO BASE METAL ONLY.

5. CONTROLLING DIMENSION: INCH.

D^{2}Pak Part Marking Information

EXAMPLE: THIS IS AN IRF530S WITH
LOT CODE 8024
ASSEMBLED ON WW 02, 2000
IN THE ASSEMBLY LINE "L"

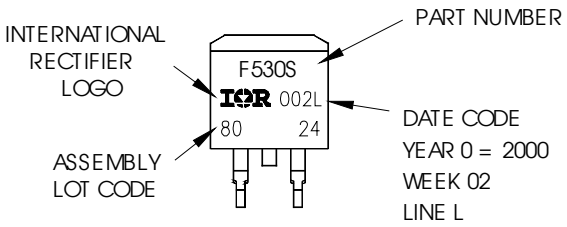

TO-262 Package Outline

Dimensions are shown in millimeters (inches)

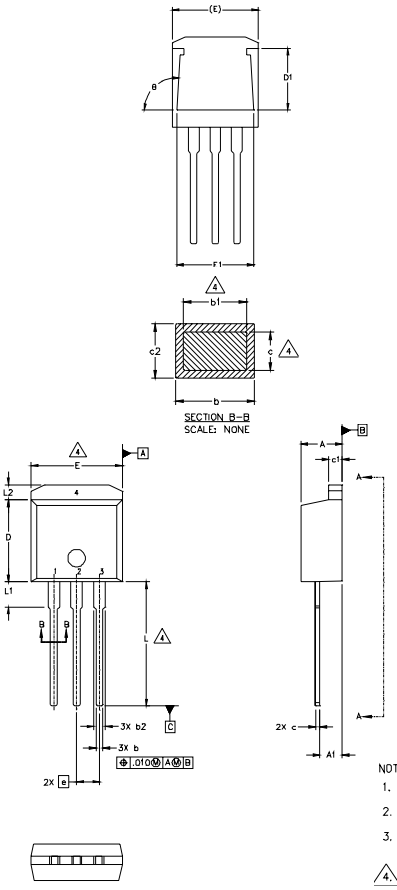

SYMBOL	DIMENSIONS				NOTES
	MILLIMETERS		INCHES		
	MIN.	MAX.	MIN.	MAX.	
A	4.06	4.83	.160	.190	
A1	2.03	2.92	.080	.115	
b	0.51	0.99	.020	.039	
b1	0.51	0.89	.020	.035	4
b2	1.14	1.40	.045	.055	
c	0.38	0.63	.015	.025	4
c1	1.14	1.40	.045	.055	
c2	0.43	.063	.017	.029	
D	8.51	9.65	.335	.380	3
D1	5.33		.210		
E	9.65	10.67	.380	.420	3
E1	6.22		.245		
e	2.54 BSC		.100 BSC		
L	13.46	14.09	.530	.555	
L1	3.56	3.71	.140	.146	
L2		1.65		.065	

LEAD ASSIGNMENTS

HEXFET	IGBT
1.– GATE	1- GATE
2.– DRAIN	2- COLLECTOR
3.– SOURCE	
4.– DRAIN	

NOTES:

1. DIMENSIONING AND TOLERANCING PER ASME Y14.5M-1994
2. DIMENSIONS ARE SHOWN IN MILLIMETERS [INCHES]
3. DIMENSION D & E DO NOT INCLUDE MOLD FLASH. MOLD FLASH SHALL NOT EXCEED 0.127 [.005"] PER SIDE. THESE DIMENSIONS ARE MEASURED AT THE OUTMOST EXTREMES OF THE PLASTIC BODY.
4. DIMENSION b1 AND c1 APPLY TO BASE METAL ONLY.
5. CONTROLLING DIMENSION: INCH.

TO-262 Part Marking Information

EXAMPLE: THIS IS AN IRL3103L
LOT CODE 1789
ASSEMBLED ON WW 19, 1997
IN THE ASSEMBLY LINE "C"

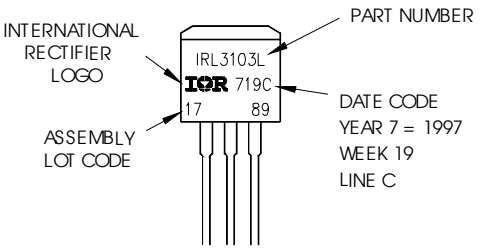

D²Pak Tape & Reel Information

Dimensions are shown in millimeters (inches)

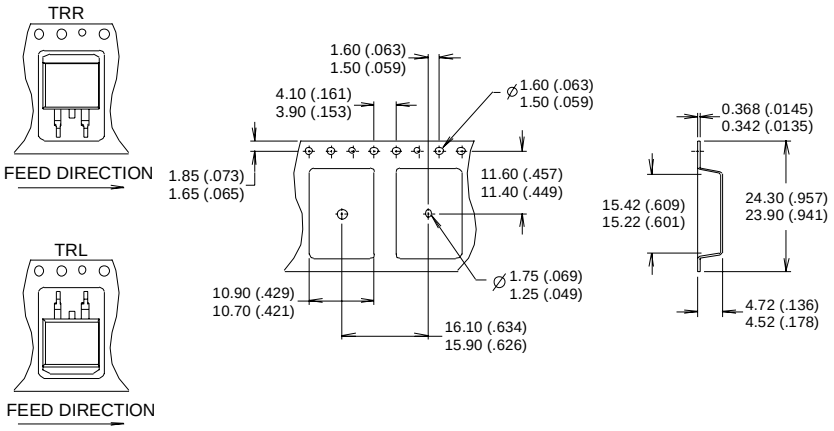

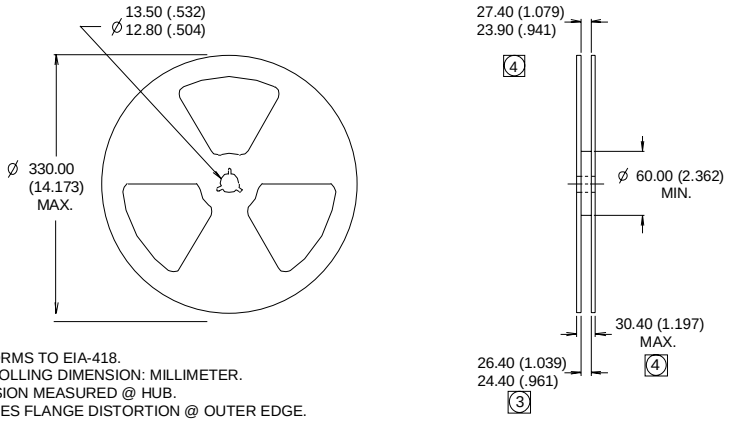

NOTES :
1. COMFORMS TO EIA-418.
2. CONTROLLING DIMENSION: MILLIMETER.
3. DIMENSION MEASURED @ HUB.
4. INCLUDES FLANGE DISTORTION @ OUTER EDGE.