查询SN74CBT16211ADGG供应商 捷多邦，专业PCB打样工厂，24小时加急出货

- **5-Ω Switch Connection Between Two Ports**
- **TTL-Compatible Input Levels**
- **Package Options Include Plastic 300-mil Shrink Small-Outline (DL), Thin Shrink Small-Outline (DGG), and Thin Very Small-Outline (DGV) Packages**

DGG, DGV, OR DL PACKAGE
(TOP VIEW)

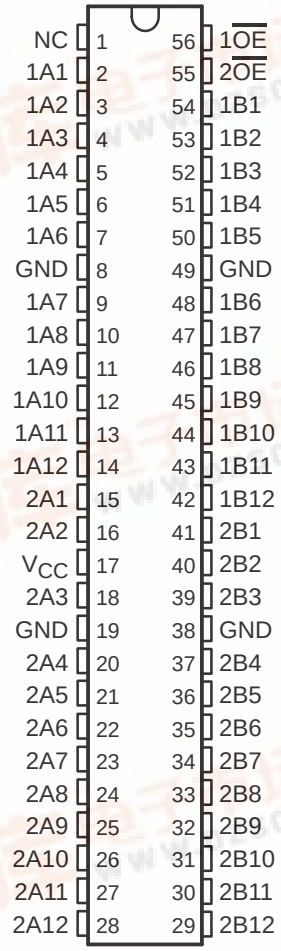

NC – No internal connection

description

The SN74CBT16211A provides 24 bits of high-speed TTL-compatible bus switching. The low on-state resistance of the switch allows connections to be made with minimal propagation delay.

The device operates as a dual 12-bit bus switch or single 24-bit bus switch. When $1\overline{OE}$ is low, 1A is connected to 1B. When $2\overline{OE}$ is low, 2A is connected to 2B.

The SN74CBT16211A is characterized for operation from –40°C to 85°C.

FUNCTION TABLE
(each 12-bit bus switch)

INPUTS		INPUTS/OUTPUTS	
$1\overline{OE}$	$2\overline{OE}$	1A, 1B	2A, 2B
L	L	1A = 1B	2A = 2B
L	H	1A = 1B	Z
H	L	Z	2A = 2B
H	H	Z	Z

Please be aware that an important notice concerning availability, standard warranty, and use in critical applications of Texas Instruments semiconductor products and disclaimers thereto appears at the end of this data sheet.

PRODUCTION DATA information is current as of publication date. Products conform to specifications per the terms of Texas Instruments standard warranty. Production processing does not necessarily include testing of all parameters.

Copyright © 1998, Texas Instruments Incorporated

logic diagram (positive logic)

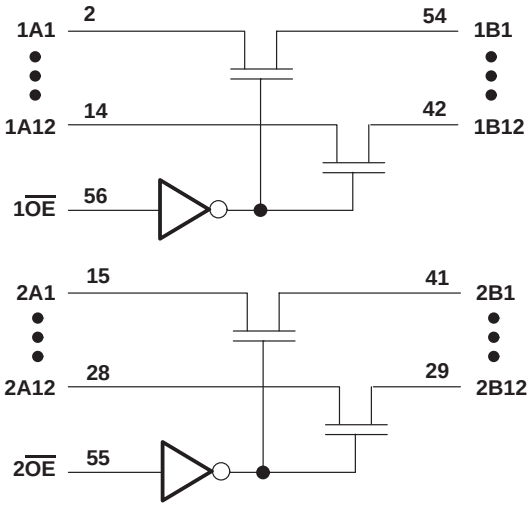

absolute maximum ratings over operating free-air temperature range (unless otherwise noted)†

Supply voltage range, V_{CC} . . . . . –0.5 V to 7 V
Input voltage range, V_I (see Note 1) . . . . . –0.5 V to 7 V
Continuous channel current . . . . . 128 mA
Input clamp current, I_{IK} ($V_I < 0$) . . . . . –50 mA
Package thermal impedance, θ_{JA} (see Note 2): DGG package . . . . . 81°C/W
DGV package . . . . . 86°C/W
DL package . . . . . 74°C/W
Storage temperature range, T_{stg} . . . . . –65°C to 150°C

† Stresses beyond those listed under "absolute maximum ratings" may cause permanent damage to the device. These are stress ratings only, and functional operation of the device at these or any other conditions beyond those indicated under "recommended operating conditions" is not implied. Exposure to absolute-maximum-rated conditions for extended periods may affect device reliability.

NOTES: 1. The input and output negative-voltage ratings may be exceeded if the input and output clamp-current ratings are observed.
2. The package thermal impedance is calculated in accordance with JESD 51.

recommended operating conditions (see Note 3)

		MIN	MAX	UNIT
V_{CC}	Supply voltage	4	5.5	V
V_{IH}	High-level control input voltage	2		V
V_{IL}	Low-level control input voltage		0.8	V
T_A	Operating free-air temperature	–40	85	°C

NOTE 3: All unused control inputs of the device must be held at V_{CC} or GND to ensure proper device operation. Refer to the TI application report, *Implications of Slow or Floating CMOS Inputs*, literature number SCBA004.

electrical characteristics over recommended operating free-air temperature range (unless otherwise noted)

PARAMETER		TEST CONDITIONS			MIN	TYP†	MAX	UNIT
V_{IK}		V_{CC} = 4.5 V,	I_I = –18 mA				–1.2	V
I_I		V_{CC} = 0 V,	V_I = 5.5 V				10	µA
		V_{CC} = 5.5 V,	V_I = 5.5 V or GND				±1	
I_{CC}		V_{CC} = 5.5 V,	I_O = 0,	V_I = V_{CC} or GND			3	µA
ΔI_{CC}‡	Control inputs	V_{CC} = 5.5 V,	One input at 3.4 V,	Other inputs at V_{CC} or GND			2.5	mA
C_i	Control inputs	V_I = 3 V or 0				3		pF
$C_{io(OFF)}$		V_O = 3 V or 0,	$\overline{OE}$ = V_{CC}			5.5		pF
r_{on}§		V_{CC} = 4 V, TYP at V_{CC} = 4 V	V_I = 2.4 V,	I_I = 15 mA		14	20	Ω
		V_{CC} = 4.5 V	V_I = 0	I_I = 64 mA		5	7	
				I_I = 30 mA		5	7	
			V_I = 2.4 V,	I_I = 15 mA		8	12	

† All typical values are at V_{CC} = 5 V (unless otherwise noted), T_A = 25°C.
‡ This is the increase in supply current for each input that is at the specified TTL voltage level rather than V_{CC} or GND.
§ Measured by the voltage drop between the A and B terminals at the indicated current through the switch. On-state resistance is determined by the lowest voltage of the two (A or B) terminals.

switching characteristics over recommended operating free-air temperature range, C_L = 50 pF (unless otherwise noted) (see Figure 1)

PARAMETER	FROM (INPUT)	TO (OUTPUT)	V_{CC} = 4 V		V_{CC} = 5 V ± 0.5 V		UNIT
			MIN	MAX	MIN	MAX	
t_{pd}¶	A or B	B or A		0.35		0.25	ns
t_{en}	$\overline{OE}$	A or B		9.3	3.3	8.6	ns
t_{dis}	$\overline{OE}$	A or B		7.1	2.8	7.9	ns

¶ The propagation delay is the calculated RC time constant of the typical on-state resistance of the switch and the specified load capacitance, when driven by an ideal voltage source (zero output impedance).

PARAMETER MEASUREMENT INFORMATION

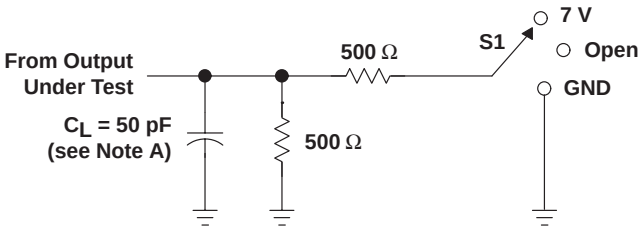

LOAD CIRCUIT

TEST	S1
t_{pd}	Open
t_{PLZ}/t_{PZL}	7 V
t_{PHZ}/t_{PZH}	Open

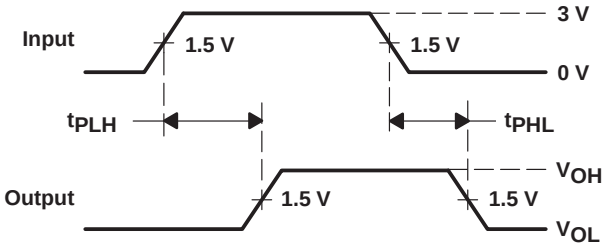

VOLTAGE WAVEFORMS
PROPAGATION DELAY TIMES

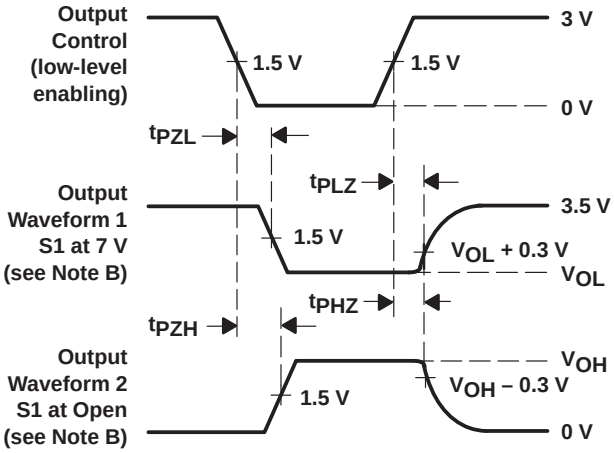

VOLTAGE WAVEFORMS
ENABLE AND DISABLE TIMES

NOTES:
A. C_L includes probe and jig capacitance.
B. Waveform 1 is for an output with internal conditions such that the output is low except when disabled by the output control. Waveform 2 is for an output with internal conditions such that the output is high except when disabled by the output control.
C. All input pulses are supplied by generators having the following characteristics: PRR ≤ 10 MHz, Z_O = 50 Ω, t_r ≤ 2.5 ns, t_f ≤ 2.5 ns.
D. The outputs are measured one at a time with one transition per measurement.
E. t_{PLZ} and t_{PHZ} are the same as t_{dis}.
F. t_{PZL} and t_{PZH} are the same as t_{en}.
G. t_{PLH} and t_{PHL} are the same as t_{pd}.

Figure 1. Load Circuit and Voltage Waveforms

IMPORTANT NOTICE

Texas Instruments and its subsidiaries (TI) reserve the right to make changes to their products or to discontinue any product or service without notice, and advise customers to obtain the latest version of relevant information to verify, before placing orders, that information being relied on is current and complete. All products are sold subject to the terms and conditions of sale supplied at the time of order acknowledgement, including those pertaining to warranty, patent infringement, and limitation of liability.

TI warrants performance of its semiconductor products to the specifications applicable at the time of sale in accordance with TI's standard warranty. Testing and other quality control techniques are utilized to the extent TI deems necessary to support this warranty. Specific testing of all parameters of each device is not necessarily performed, except those mandated by government requirements.

CERTAIN APPLICATIONS USING SEMICONDUCTOR PRODUCTS MAY INVOLVE POTENTIAL RISKS OF DEATH, PERSONAL INJURY, OR SEVERE PROPERTY OR ENVIRONMENTAL DAMAGE ("CRITICAL APPLICATIONS"). TI SEMICONDUCTOR PRODUCTS ARE NOT DESIGNED, AUTHORIZED, OR WARRANTED TO BE SUITABLE FOR USE IN LIFE-SUPPORT DEVICES OR SYSTEMS OR OTHER CRITICAL APPLICATIONS. INCLUSION OF TI PRODUCTS IN SUCH APPLICATIONS IS UNDERSTOOD TO BE FULLY AT THE CUSTOMER'S RISK.

In order to minimize risks associated with the customer's applications, adequate design and operating safeguards must be provided by the customer to minimize inherent or procedural hazards.

TI assumes no liability for applications assistance or customer product design. TI does not warrant or represent that any license, either express or implied, is granted under any patent right, copyright, mask work right, or other intellectual property right of TI covering or relating to any combination, machine, or process in which such semiconductor products or services might be or are used. TI's publication of information regarding any third party's products or services does not constitute TI's approval, warranty or endorsement thereof.

Copyright © 1998, Texas Instruments Incorporated