查询1SV269供应商 捷多邦，专业PCB打样工厂，24小时加急出货

TOSHIBA VARIABLE CAPACITANCE DIODE SILICON EPITAXIAL PLANAR TYPE

1SV269

CATV TUNING.

Unit in mm

- High Capacitance Ratio : C2V / C25V = 11.5 (Typ.)
- Low Series Resistance : rs = 0.55Ω (Typ.)
- Excellent C-V Characteristics, and Small Tracking Error.
- Small Package

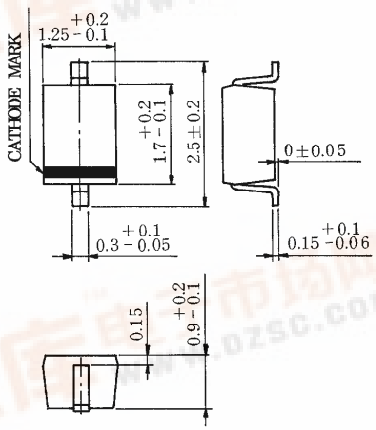

JEDEC	—
EIAJ	—
TOSHIBA	1-1E1A

MAXIMUM RATINGS (Ta = 25°C)

CHARACTERISTIC	SYMBOL	RATING	UNIT
Reverse Voltage	V_R	34	V
Peak Reverse Voltage	V_{RM}	36 (R_L = 10kΩ)	V
Junction Temperature	T_j	125	°C
Storage Temperature Range	T_{stg}	−55~125	°C

ELECTRICAL CHARACTERISTICS (Ta = 25°C)

CHARACTERISTIC	SYMBOL	TEST CONDITION	MIN.	TYP.	MAX.	UNIT
Reverse Voltage	V_R	I_R = 1μA	34	—	—	V
Reverse Current	I_R	V_R = 32V	—	—	10	nA
Capacitance	C2V	V_R = 2V, f = 1MHz	29	31.5	34	pF
Capacitance	C25V	V_R = 25V, f = 1MHz	2.5	2.75	2.9	pF
Capacitance Ratio	C2V / C25V	—	11.0	11.5	—	—
Capacitance Ratio	C25V / C28V	—	1.03	1.05	—	—
Series Resistance	r_s	V_R = 5V, f = 470MHz	—	0.55	0.7	Ω

Note 1 : Available in matched group for capacitance to 2.0%.

$$\frac{C\,(Max.) - C\,(Min.)}{C\,(Min.)} \leqq 0.02 \quad (VR = 2 \sim 25V)$$

Marking

961001EAA2

● TOSHIBA is continually working to improve the quality and the reliability of its products. Nevertheless, semiconductor devices in general can malfunction or fail due to their inherent electrical sensitivity and vulnerability to physical stress. It is the responsibility of the buyer, when utilizing TOSHIBA products, to observe standards of safety, and to avoid situations in which a malfunction or failure of a TOSHIBA product could cause loss of human life, bodily injury or damage to property. In developing your designs, please ensure that TOSHIBA products are used within specified operating ranges as set forth in the most recent products specifications. Also, please keep in mind the precautions and conditions set forth in the TOSHIBA Semiconductor Reliability Handbook.
● The information contained herein is presented only as a guide for the applications of our products. No responsibility is assumed by TOSHIBA CORPORATION for any infringements of intellectual property or other rights of the third parties which may result from its use. No license is granted by implication or otherwise under any intellectual property or other rights of TOSHIBA CORPORATION or others.
● The information contained herein is subject to change without notice.

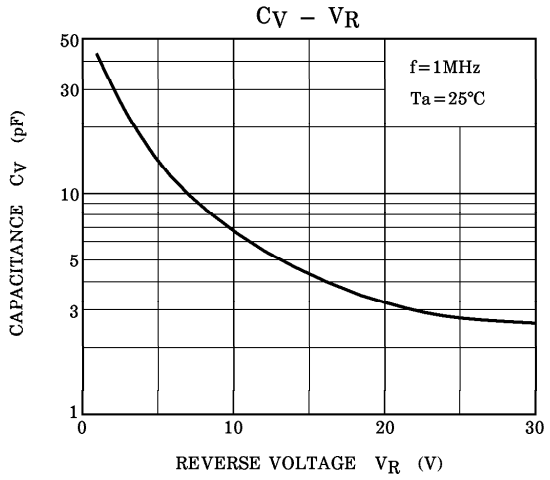
CV – VR
f=1MHz
Ta=25°C
CAPACITANCE CV (pF)
50
30
10
5
3
1
0
10
20
30
REVERSE VOLTAGE VR (V)

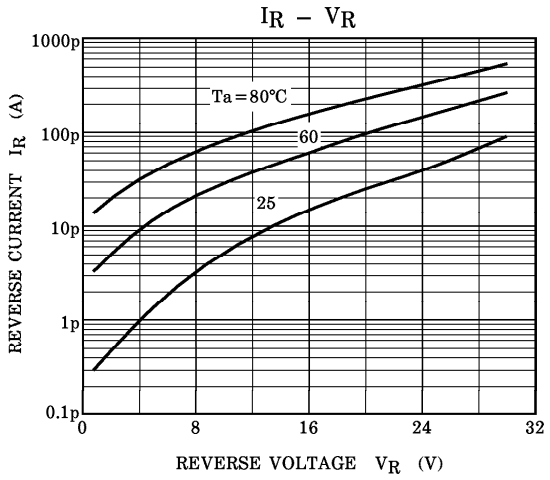
IR – VR
Ta=80°C
60
25
REVERSE CURRENT IR (A)
1000p
100p
10p
1p
0.1p
0
8
16
24
32
REVERSE VOLTAGE VR (V)

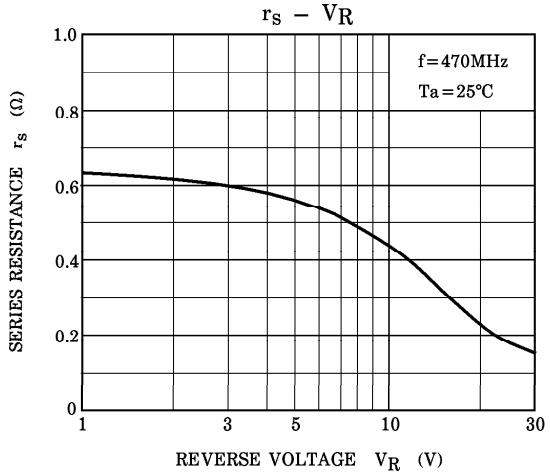
rs – VR
f=470MHz
Ta=25°C
SERIES RESISTANCE rs (Ω)
1.0
0.8
0.6
0.4
0.2
0
1
3
5
10
30
REVERSE VOLTAGE VR (V)

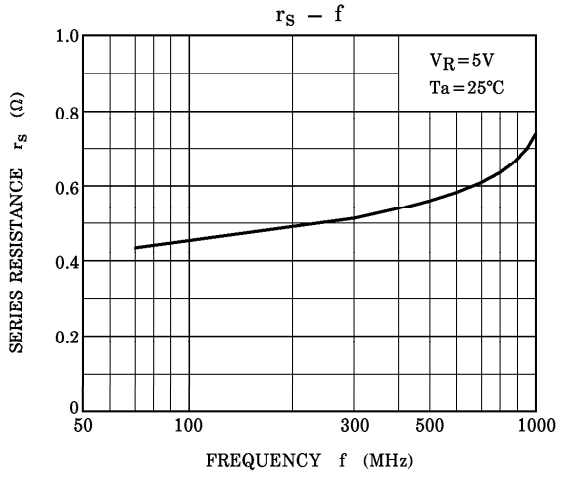
rs – f
VR=5V
Ta=25°C
SERIES RESISTANCE rs (Ω)
1.0
0.8
0.6
0.4
0.2
0
50
100
300
500
1000
FREQUENCY f (MHz)

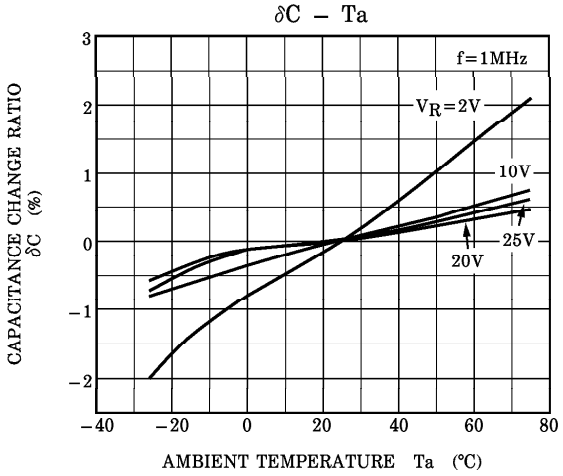
δC – Ta
f=1MHz
VR=2V
10V
25V
20V
CAPACITANCE CHANGE RATIO δC (%)
3
2
1
0
−1
−2
−40
−20
0
20
40
60
80
AMBIENT TEMPERATURE Ta (°C)