查询UC1608T-3R3供应商 捷多邦，专业PCB打样工厂，24小时加急出货

SMD Power Inductors

ECM UC Series

This particular range of surface mount inductors, the ***UC*** series now comes in seven package sizes each with their own individual benefits. The range features some of the smallest footprint sizes available for product of its type, in addition the new ***UC1606*** package is only 1.80mm high while offering safe current operation up to 2.5A (@ 1.0uH). While the ***UC5022*** is available up to 1.0mH @ 1 Amp while maintaining a total height less than 8.0mm.

Ferrite shielded versions of ***UC1608***, ***UC3316***, and ***UC5022*** are also available.

COMPONENT OUTLINE

Fig.1

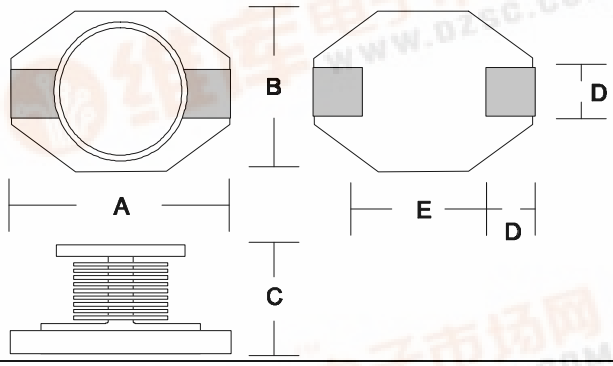

Fig.2

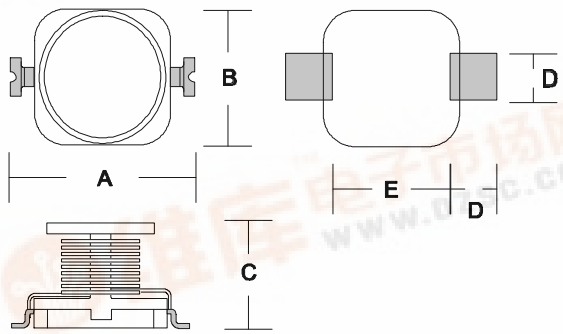

DIMENSIONS

ECM Type	Inductance Range	(Fig.)	A (mm)	B	C	D	E
UC1606	1.0uH~1.0mH	1	6.40	5.50	1.80	0.80	4.80
UC1608	1.0uH~1.0mH	1	6.60	4.45	1.27	1.02	4.32
UC1818	1.0uH~3.3mH	2	7.20	4.70	5.00	1.60	4.80
UC3308	10uH~1.0mH	1	12.95	9.40	3.00	2.54	7.62
UC3316	1.0uH~1.0mH	1	12.95	9.40	5.20	2.54	7.62
UC3340	10uH~1.0mH	1	12.95	9.40	11.43	2.54	7.62
UC5022	1.0uH~1.0mH	1	18.54	15.24	7.11	2.54	7.62

ECM Electronics Limited, Penmaen House, Ashington, West Sussex, RH20 3JR, UK
Tel: +44(0)1903 892810: Fax: +44(0)1903 892738. Email: ecm@ecmelectronics.co.uk
Although we have attempted to accurately reflect the products we market. ECM reserve the right without prior notice to

SMD Power Inductors

ECM Part	L (mH)	Tol %	R_{DC} MAX (W)	I_{DC} I_N (A)

UC1606 Series

UC1606T-1R0	1.0 @100 kHz	M	0.05	2.50
UC1606T-1R5	1.5 @100 kHz	M	0.06	2.20
UC1606T-2R2	2.2 @100 kHz	M	0.07	1.80
UC1606T-3R3	3.3 @100 kHz	M	0.10	1.40
UC1606T-4R7	4.7 @ 100kHz	M	0.12	1.20
UC1606T-6R8	6.8 @100 kHz	M	0.19	1.10
UC1606T-100	10 @100 kHz	M	0.30	1.00
UC1606T-150	15 @100 kHz	M	0.40	0.80
UC1606T-220	22 @100 kHz	M	0.54	0.60
UC1606T-330	33 @100 kHz	M	0.74	0.50
UC1606T-470	47 @100 kHz	M	1.10	0.45
UC1606T-680	68 @100 kHz	M	1.60	0.35
UC1606T-101	100 @100 kHz	M	2.30	0.30
UC1606T-151	150 @100 kHz	M	3.20	0.25
UC1606T-221	220 @100 kHz	M	5.70	0.20
UC1606T-331	330 @100 kHz	M	8.20	0.16
UC1606T-471	470 @100 kHz	M	10.80	0.14
UC1606T-681	680 @100 kHz	M	17.20	0.12
UC1606T-102	1000 @100 kHz	M	22.60	0.08

UC1608 Series

UC1608T-1R0	1.0 @100 kHz	M	0.05	2.90
UC1608T-1R5	1.5 @ 100kHz	M	0.05	2.60
UC1608T-2R2	2.2 @100 kHz	M	0.06	2.30
UC1608T-3R3	3.3 @100 kHz	M	0.07	2.00
UC1608T-4R7	4.7 @ 100kHz	M	0.08	1.50
UC1608T-6R8	6.8 @100 kHz	M	0.11	1.20
UC1608T-100	10 @100 kHz	M	0.14	1.10
UC1608T-150	15 @100 kHz	M	0.20	0.90
UC1608T-220	22 @100 kHz	M	0.32	0.70
UC1608T-330	33 @100 kHz	M	0.44	0.58
UC1608T-470	47 @100 kHz	M	0.56	0.50
UC1608T-680	68 @100 kHz	M	0.75	0.40
UC1608T-101	100 @100 kHz	M	1.10	0.31
UC1608T-151	150 @100 kHz	M	1.70	0.27
UC1608T-221	220 @100 kHz	M	2.30	0.22
UC1608T-331	330 @100 kHz	M	3.30	0.18
UC1608T-471	470 @100 kHz	M	4.40	0.06
UC1608T-681	680 @100 kHz	M	6.80	0.14
UC1608T-102	1000 @100 kHz	M	12.00	0.10

TOLERANCE K=10%; M=20%.

ECM Electronics Limited, Penmaen House, Ashington, West Sussex, RH20 3JR, UK
Tel: +44(0)1903 892810: Fax: +44(0)1903 892738. Email: ecm@ecmelectronics.co.uk

Although we have attempted to accurately reflect the products we market. ECM reserve the right without prior notice to

SMD Power Inductors

ECM Part	L (mH)	Tol %	Q Min. (** MHz)	SRF Min. (MHz)	R_{DC} MAX (W)	I_{DC} I_N (mA)
UC1818 Series						
UC1818T-1R0	1.0 @25.2 MHz	M	60	110	0.04	2000
UC1818T-1R2	1.2 @7.96 MHz	M	80	90	0.04	2000
UC1818T-1R5	1.5 @7.96 MHz	M	80	70	0.04	2000
UC1818T-1R8	1.8 @7.96 MHz	M	80	60	0.04	2000
UC1818T-2R2	2.2 @7.96 MHz	M	80	50	0.04	2000
UC1818T-2R7	2.7 @7.96 MHz	M	80	40	0.05	1920
UC1818T-3R3	3.3 @7.96 MHz	M	80	35	0.06	1740
UC1818T-3R9	3.9 @7.96 MHz	M	80	32	0.07	1600
UC1818T-4R7	4.7 @7.96 MHz	M	80	30	0.08	1450
UC1818T-5R6	5.6 @7.96 MHz	M	80	28	0.10	1320
UC1818T-6R8	6.8 @7.96 MHz	M	80	26	0.12	1200
UC1818T-8R2	8.2 @7.96 MHz	M	80	24	0.14	1100
UC1818T-100	10 @7.96 MHz	K	70	22	0.17	1000
UC1818T-120	12 @2.52 MHz	K	60	18	0.20	900
UC1818T-150	15 @2.52 MHz	K	50	16	0.25	810
UC1818T-180	18 @2.52 MHz	K	50	14	0.30	740
UC1818T-220	22 @2.52 MHz	K	50	13	0.36	670
UC1818T-270	27 @2.52 MHz	K	50	12	0.43	610
UC1818T-330	33 @2.52 MHz	K	50	10	0.52	550
UC1818T-390	39 @2.52 MHz	K	50	10	0.62	500
UC1818T-470	47 @2.52 MHz	K	50	8.8	0.82	450
UC1818T-560	56 @2.52 MHz	K	50	7.5	1.00	410
UC1818T-680	68 @2.52 MHz	K	50	7.0	1.20	370
UC1818T-820	82 @2.52 MHz	K	50	6.5	1.40	340
UC1818T-101	100 @2.52 MHz	K	50	6.0	1.70	310
UC1818T-121	120 @0.796 MHz	K	70	5.5	1.70	310
UC1818T-151	150 @0.796 MHz	K	70	5.0	2.00	290
UC1818T-181	180 @0.796 MHz	K	70	4.5	2.20	270
UC1818T-221	220 @0.796 MHz	K	70	4.0	2.50	250
UC1818T-271	270 @0.796 MHz	K	70	3.7	3.00	230
UC1818T-331	330 @0.796 MHz	K	60	3.4	3.60	210
UC1818T-391	390 @0.796 MHz	K	60	3.0	4.30	190
UC1818T-471	470 @0.796 MHz	K	60	2.7	5.20	170
UC1818T-561	560 @0.796 MHz	K	60	2.5	6.20	155
UC1818T-681	680 @0.796 MHz	K	60	2.4	6.80	140
UC1818T-821	820 @0.796 MHz	K	60	2.2	8.20	130
UC1818T-102	1000 @0.796 MHz	K	60	2.0	11.00	115
UC1818T-122	1200 @0.252 MHz	K	80	1.7	12.00	105
UC1818T-152	1500 @0.252 MHz	K	80	1.6	14.00	95
UC1818T-182	1800 @0.252 MHz	K	80	1.5	17.00	85
UC1818T-222	2200 @0.252 MHz	K	80	1.3	22.00	75
UC1818T-272	2700 @0.252 MHz	K	80	1.2	24.00	70
UC1818T-332	3300 @0.252 MHz	K	80	1.1	27.00	65

**** = Test Frequency as specified in 'L' column**

ECM Electronics Limited, Penmaen House, Ashington, West Sussex, RH20 3JR, UK
Tel: +44(0)1903 892810: Fax: +44(0)1903 892738. Email: ecm@ecmelectronics.co.uk

Although we have attempted to accurately reflect the products we market. ECM reserve the right without prior notice to

SMD Power Inductors

ECM Part	L (mH)	Tol %	R_{DC} MAX (W)	I_{DC} I_N (A)

UC3308 Series

UC3308T-100	10 @100 kHz	M	0.09	2.4
UC3308T-150	15 @100 kHz	M	0.12	2.0
UC3308T-220	22 @100 kHz	M	0.19	1.6
UC3308T-330	33 @100 kHz	M	0.25	1.4
UC3308T-470	47 @100 kHz	M	0.32	1.0
UC3308T-680	68 @100 kHz	M	0.55	0.9
UC3308T-101	100 @100 kHz	M	0.70	0.7
UC3308T-151	150 @100 kHz	M	1.00	0.6
UC3308T-221	220 @100 kHz	M	1.60	0.5
UC3308T-331	330 @100 kHz	M	2.20	0.4
UC3308T-471	470 @100 kHz	M	3.30	0.3
UC3308T-681	680 @100 kHz	M	4.40	0.2
UC3308T-102	1000 @100 kHz	M	7.00	0.1

UC3316 Series

UC3316T-1R0	1.0 @100 kHz	M	0.09	9.0
UC3316T-1R5	1.5 @100 kHz	M	0.10	8.0
UC3316T-2R2	2.2 @100 kHz	M	0.12	7.0
UC3316T-3R3	3.3 @100 kHz	M	0.15	6.4
UC3316T-4R7	4.7 @100 kHz	M	0.18	5.4
UC3316T-6R8	6.8 @100 kHz	M	0.22	4.6
UC3316T-100	10 @100 kHz	M	0.29	3.8
UC3316T-150	15 @100 kHz	M	0.46	3.0
UC3316T-220	22 @100 kHz	M	0.58	2.6
UC3316T-330	33 @100 kHz	M	0.10	2.0
UC3316T-470	47 @100 kHz	M	0.14	1.6
UC3316T-680	68 @100 kHz	M	0.18	1.4
UC3316T-101	100 @100 kHz	M	0.26	1.2
UC3316T-151	150 @100 kHz	M	0.38	1.0
UC3316T-221	220 @100 kHz	M	0.61	0.8
UC3316T-331	330 @100 kHz	M	0.93	0.6
UC3316T-471	470 @100 kHz	M	1.27	0.5
UC3316T-681	680 @100 kHz	M	1.84	0.4
UC3316T-102	1000 @100 kHz	M	2.47	0.3

TOLERANCE K=10%; M=20%.

ECM Electronics Limited, Penmaen House, Ashington, West Sussex, RH20 3JR, UK
Tel: +44(0)1903 892810: Fax: +44(0)1903 892738. Email: ecm@ecmelectronics.co.uk

Although we have attempted to accurately reflect the products we market. ECM reserve the right without prior notice to

SMD Power Inductors

ECM Part	L (mH)	Tol %	R_{DC} MAX (W)	I_{DC} I_N (A)

UC3340 Series

UC3340T-100	10 @100 kHz	M	0.033	8.0
UC3340T-150	15 @100 kHz	M	0.042	7.0
UC3340T-220	22 @100 kHz	M	0.054	5.5
UC3340T-330	33 @100 kHz	M	0.08	4.0
UC3340T-470	47 @100 kHz	M	0.10	3.8
UC3340T-680	68 @100 kHz	M	0.17	3.0
UC3340T-101	100 @100 kHz	M	0.22	2.5
UC3340T-151	150 @100 kHz	M	0.34	2.0
UC3340T-221	220 @100 kHz	M	0.44	1.6
UC3340T-331	330 @100 kHz	M	0.70	1.2
UC3340T-471	470 @100 kHz	M	0.95	1.0
UC3340T-681	680 @100 kHz	M	1.20	1.0
UC3340T-102	1000 @100 kHz	M	2.00	0.8

UC5022 Series

UC5022T-1R0	1.0 @100 kHz	M	0.011	20
UC5022T-2R2	2.2 @100 kHz	M	0.014	16
UC5022T-3R3	3.3 @100 kHz	M	0.016	14
UC5022T-6R8	6.8 @100 kHz	M	0.022	12
UC5022T-100	10 @100 kHz	M	0.032	10
UC5022T-150	15 @100 kHz	M	0.036	8.0
UC5022T-220	22 @100 kHz	M	0.047	7.0
UC5022T-330	33 @100 kHz	M	0.066	5.5
UC5022T-470	47 @100 kHz	M	0.087	4.5
UC5022T-680	68 @100 kHz	M	0.13	3.5
UC5022T-101	100 @100 kHz	M	0.19	3.0
UC5022T-151	150 @100 kHz	M	0.25	2.6
UC5022T-221	220 @100 kHz	M	0.38	2.4
UC5022T-331	330 @100 kHz	M	0.56	1.9
UC5022T-471	470 @100 kHz	M	0.85	1.4
UC5022T-681	680 @100 kHz	M	1.20	1.2
UC5022T-102	1000 @100 kHz	M	1.80	1.0

TOLERANCE K=10%; M=20%.

ECM Electronics Limited, Penmaen House, Ashington, West Sussex, RH20 3JR, UK
Tel: +44(0)1903 892810: Fax: +44(0)1903 892738. Email: ecm@ecmelectronics.co.uk

Although we have attempted to accurately reflect the products we market. ECM reserve the right without prior notice to