查询STB200NF04L-1供应商 捷多邦，专业PCB打样工厂，24小时加急出货

STP200NF04L
STB200NF04L - STB200NF04L-1

N-CHANNEL 40V - 3 mΩ - 120 A TO-220/D²PAK/I²PAK STripFET™ II MOSFET

Table 1: General Features

TYPE	V_{DSS}	$R_{DS(on)}$	I_D
STB200NF04L	40 V	3.5 mΩ	120 A
STP200NF04L	40 V	3.8 mΩ	120 A
STB200NF04L-1	40 V	3.8 mΩ	120 A

- TYPICAL $R_{DS(on)}$ = 3mΩ
- 100% AVALANCHE TESTED
- LOW THERESHOLD DRIVE

Figure 1: Package

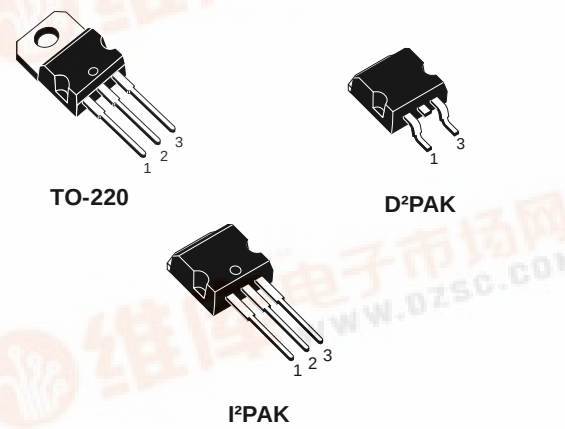

DESCRIPTION

This MOSFET is the latest development of STMicroelectronics unique "Single Feature Size™" stripbased process. The resulting transistor shows extremely high packing density for low on-resistance, rugged avalanche characteristics and less-critical alignement steps therefore a remarkable manufacturing reproducibility. This new improved device has been specifically designed for Automotive applications.

APPLICATIONS

- HIGH CURRENT, HIGH SWITCHING SPEED

Figure 2: Internal Schematic Diagram

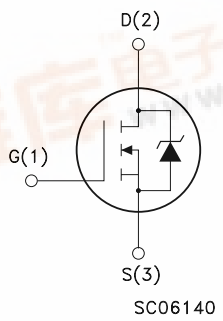

Table 2: Order Codes

PART NUMBER	MARKING	PACKAGE	PACKAGING
STP200NF04L	P200NF04L	TO-220	TUBE
STB200NF04L	B200NF04L	D²PAK	TAPE & REEL
STB200NF04L-1	B200NF04L	I²PAK	TUBE

找PDF 维库一下 pdf.dzsc.com

Table 3: Absolute Maximum ratings

Symbol	Parameter	Value	Unit
V_{DS}	Drain-source Voltage (V_{GS} = 0)	40	V
V_{GDR}	Drain-gate Voltage (R_{GS}=20 KΩ)	40	V
V_{GS}	Gate- source Voltage	± 16	V
I_D (**)	Drain Current (continuous) at T_C = 25°C	120	A
I_D	Drain Current (continuous) at T_C = 100°C	120	A
I_{DM} (2)	Drain Current (pulsed)	480	A
P_{TOT}	Total Dissipation at T_C = 25°C	300	W
	Derating Factor	2	W/°C
dv/dt (1)	Peak Diode Recovery voltage slope	3.6	V/ns
E_{AS} (3)	Single Pulse Avalanche Energy	1.4	J
T_{stg}	Storage Temperature	-55 to 175	°C
T_j	Max. Operating Junction Temperature		

(1)$I_{SD} \leq 100$ A, di/dt ≤ 240 A/µs, $V_{DD} \leq 32$, $T_j \leq T_{JMAX}$
(2) Pulse width limited by safe operating area.
(3) Starting T_j = 25°C, I_{AR} = 50A, V_{DD} = 30V
(**) Current limited by Package

Table 4: Thermal Data

			TO-220/I²PAK	D²PAK	Unit
Rthj-case	Thermal Resistance Junction-case	Max	0.50		°C/W
Rthj-pcb (*)	Thermal Resistance Junction-pcb	Max		35	°C/W
Rthja	Thermal Resistance Junction-ambient	Max	62.5	--	
T_l	Maximum Lead Temperature For Soldering Purpose		300	--	°C

(*)When mounted on 1 inch² FR4 2oZ Cu

ELECTRICAL CHARACTERISTICS (T_{CASE} =25°C UNLESS OTHERWISE SPECIFIED)

Table 5: On/Off

Symbol	Parameter	Test Conditions		Min.	Typ.	Max.	Unit
$V_{(BR)DSS}$	Drain-source Breakdown Voltage	I_D = 250 µA, V_{GS} = 0		40			V
I_{DSS}	Zero Gate Voltage Drain Current (V_{GS} = 0)	V_{DS}= Max Rating V_D = Max Rating, T_C= 125 °C				1 10	µA µA
I_{GSS}	Gate-body Leakage Current (V_{DS} = 0)	V_{GS} = ± 16V				±100	nA
$V_{GS(th)}$	Gate Threshold Voltage	V_{DS} = V_{GS}, I_D = 250µA		1		4	V
$R_{DS(on)}$	Static Drain-source On Resistance	V_{GS} = 10 V, I_D = 50 A V_{GS} = 5 V, I_D = 50 A	**TO-220** **I²PAK**		3.3 3.8	3.8 4.6	mΩ mΩ
		V_{GS} = 10 V, I_D = 50 A V_{GS} = 5 V, I_D = 50 A	**D²PAK**		3.0 3.5	3.5 4.3	mΩ mΩ

ELECTRICAL CHARACTERISTICS (CONTINUED)

Table 6: Dynamic

Symbol	Parameter	Test Conditions	Min.	Typ.	Max.	Unit
g_{fs} (4)	Forward Transconductance	V_{DS} = 15 V, I_D = 20 A		60		S
C_{iss} C_{oss} C_{rss}	Input Capacitance Output Capacitance Reverse Transfer Capacitance	V_{DS} = 25V, f = 1 MHz, V_{GS} = 0		6400 1300 190		pF pF pF
$t_{d(on)}$ t_r $t_{d(off)}$ t_f	Turn-on Delay Time Rise Time Turn-off Delay Time Fall Time	V_{DD} = 20 V, I_D = 50 A, R_G= 4.7 Ω V_{GS} = 4.5 V (see Figure 16)		37 270 90 80		ns ns ns ns
$t_{f(Voff)}$ t_f t_c	Turn-off Delay Time Fall Time Cross-over Time	V_{clamp} = 32 V, I_D = 100 A, R_G= 4.7 Ω V_{GS} = 4.5 V (see Figure 17)		85 125 160		ns ns ns
Q_g Q_{gs} Q_{gd}	Total Gate Charge Gate-Source Charge Gate-Drain Charge	V_{DD} = 32 V, I_D = 100 A, V_{GS} = 4.5 V (see Figure 19)		72 20 28.5	90	nC nC nC

Table 7: Source Drain Diode

Symbol	Parameter	Test Conditions	Min.	Typ.	Max.	Unit
I_{SD}	Source-drain Current				100	A
I_{SDM} (1)	Source-drain Current (pulsed)				400	A
V_{SD} (4)	Forward On Voltage	I_{SD} = 160 A, V_{GS} = 0			1.3	V
t_{rr} Q_{rr} I_{RRM}	Reverse Recovery Time Reverse Recovery Charge Reverse Recovery Current	I_{SD} = 100 A, di/dt = 100 A/µs, V_{DD} = 20 V, T_j = 150°C (see Figure 16)		88 240 5.5		ns nC A

(1) Pulse width limited by safe operating area
(4). Pulsed: Pulse duration = 300 µs, duty cycle 1.5 %.

Figure 3: Safe Operating Area

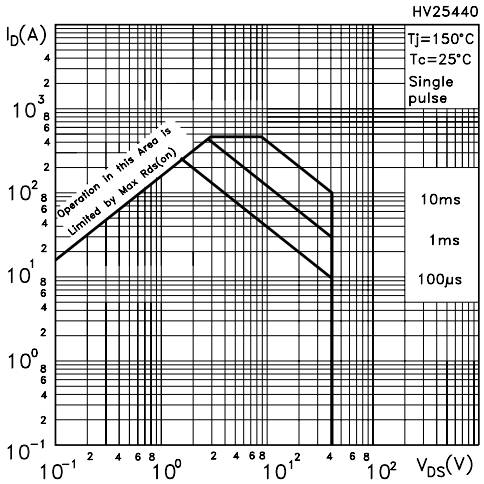

Figure 6: Thermal Impedance

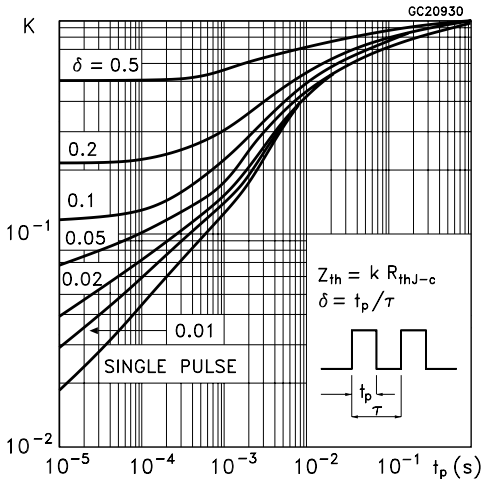

Figure 4: Output Characteristics

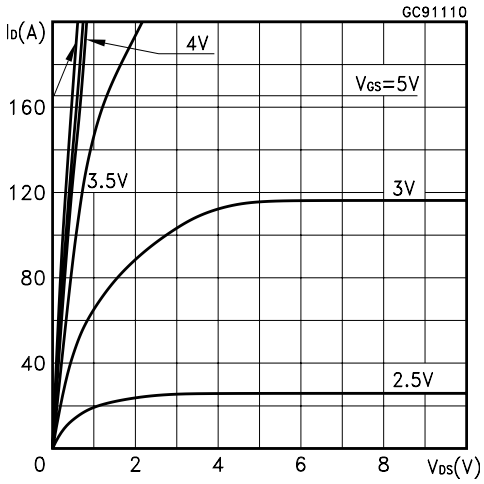

Figure 7: Transfer Characteristics

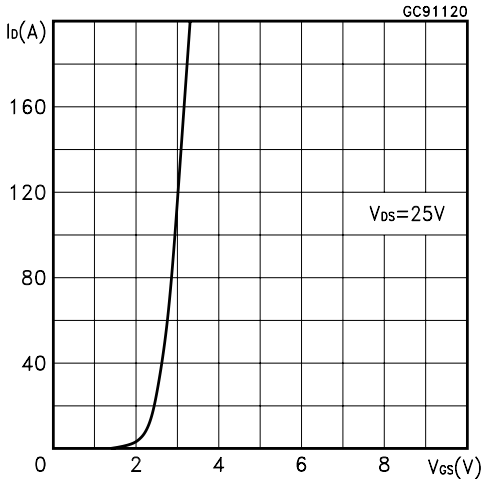

Figure 5: Transconductance

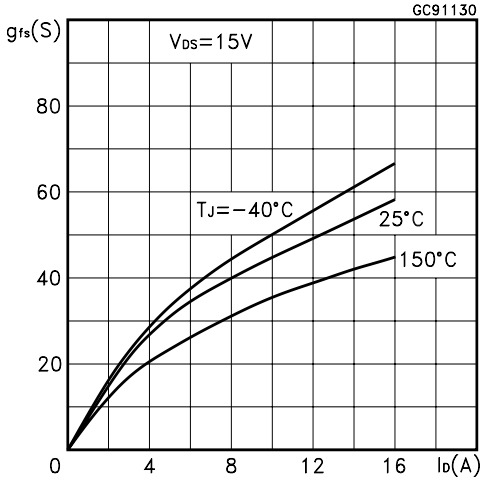

Figure 8: Static Drain-source On Resistance

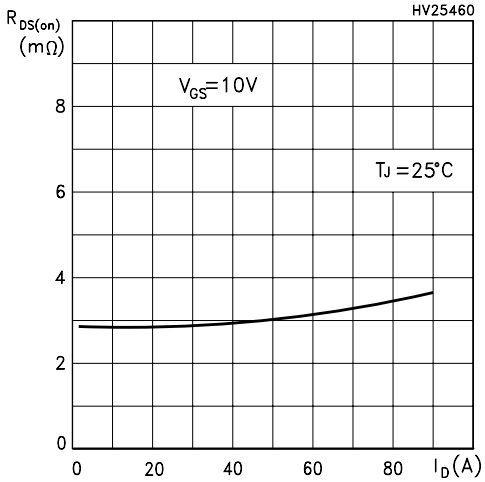

Figure 9: Gate Charge vs Gate-source Voltage

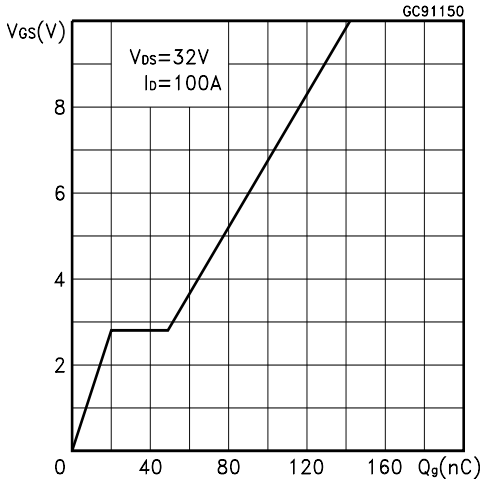

Figure 10: Normalized Gate Thereshold Voltage vs Temperature

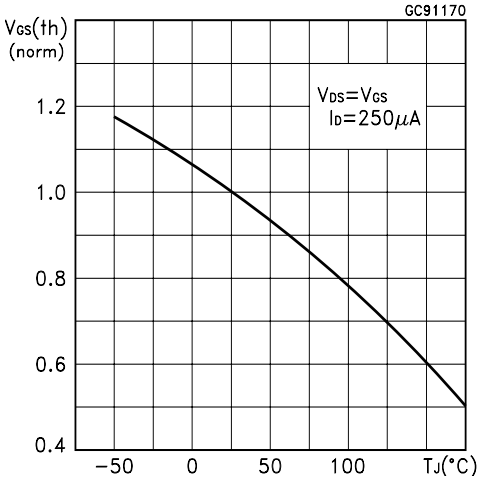

Figure 11: Source-Drain Diode Forward Characteristics

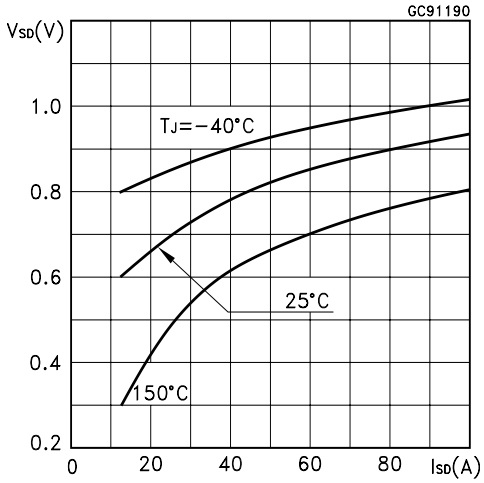

Figure 12: Capacitance Variations

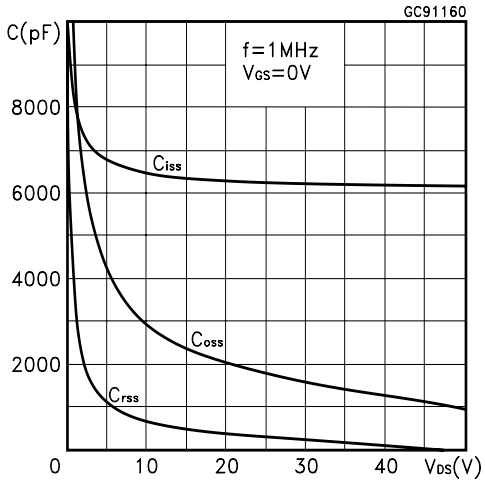

Figure 13: Normalized On Resistance vs Temperature

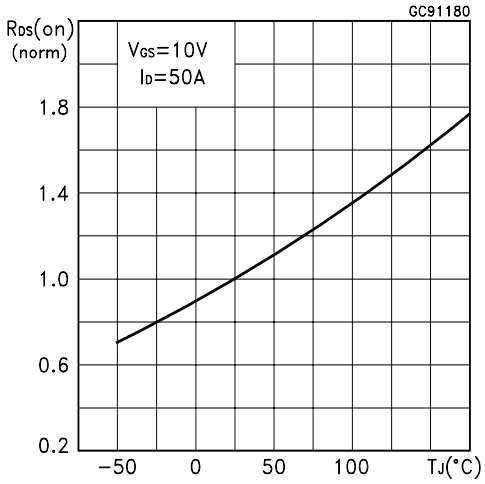

Figure 14: Normalized Breakdown Voltage vs Temperature

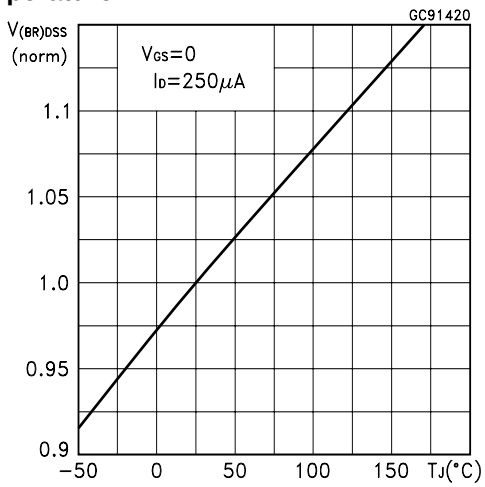

Figure 15: Unclamped Inductive Load Test Circuit

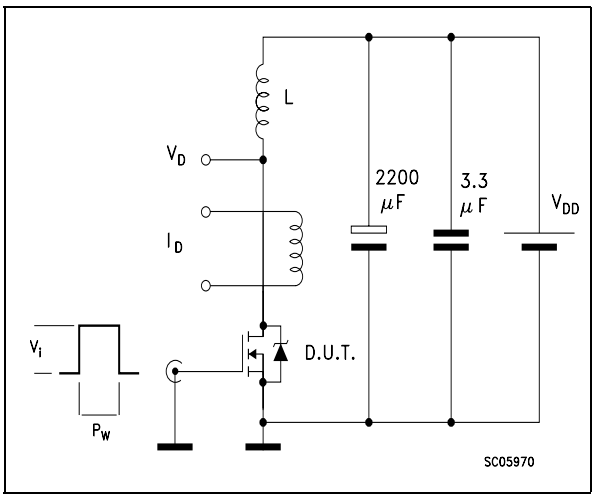

Figure 16: Switching Times Test Circuit For Resistive Load

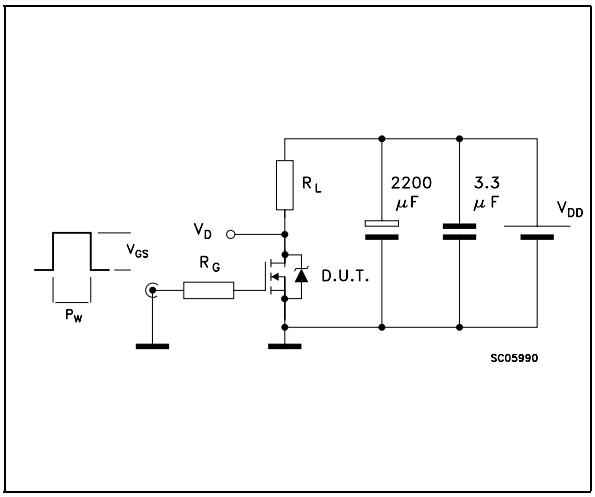

Figure 17: Test Circuit For Inductive Load Switching and Diode Recovery Times

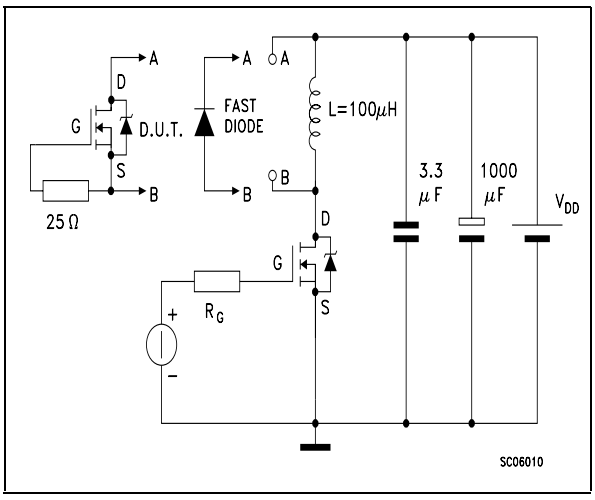

Figure 18: Unclamped Inductive Wafeform

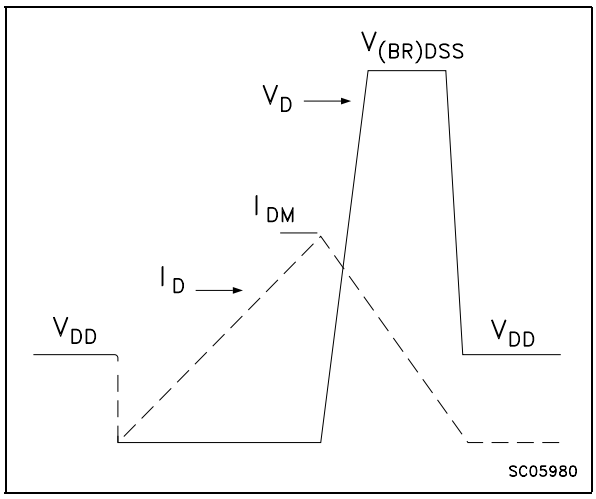

Figure 19: Gate Charge Test Circuit

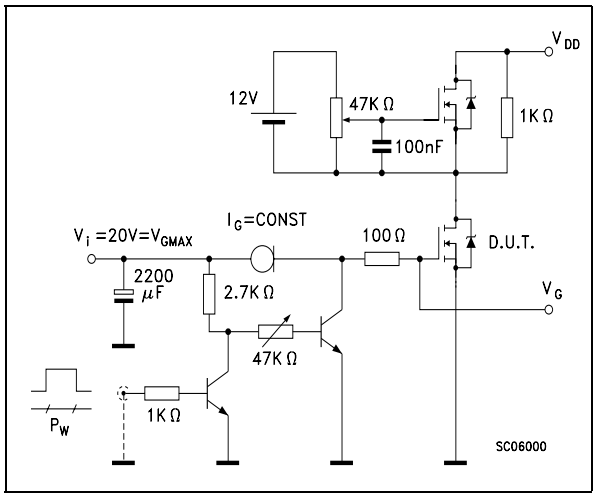

TO-220 MECHANICAL DATA

DIM.	mm.			inch		
	MIN.	TYP	MAX.	MIN.	TYP.	MAX.
A	4.40		4.60	0.173		0.181
b	0.61		0.88	0.024		0.034
b1	1.15		1.70	0.045		0.066
c	0.49		0.70	0.019		0.027
D	15.25		15.75	0.60		0.620
E	10		10.40	0.393		0.409
e	2.40		2.70	0.094		0.106
e1	4.95		5.15	0.194		0.202
F	1.23		1.32	0.048		0.052
H1	6.20		6.60	0.244		0.256
J1	2.40		2.72	0.094		0.107
L	13		14	0.511		0.551
L1	3.50		3.93	0.137		0.154
L20		16.40			0.645	
L30		28.90			1.137	
øP	3.75		3.85	0.147		0.151
Q	2.65		2.95	0.104		0.116

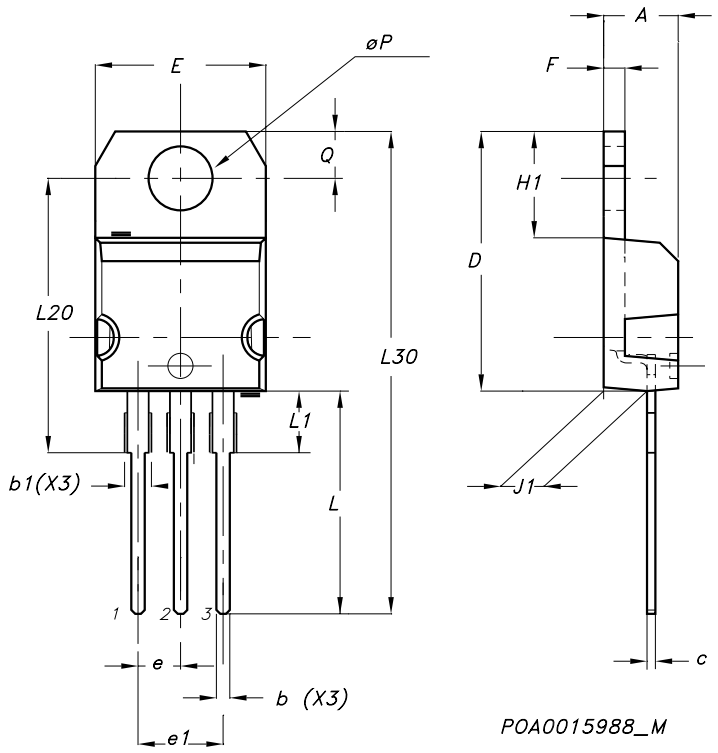

TO-262 (I^2PAK) MECHANICAL DATA

DIM.	mm.			inch		
	MIN.	TYP	MAX.	MIN.	TYP.	MAX.
A	4.40		4.60	0.173		0.181
A1	2.40		2.72	0.094		0.107
b	0.61		0.88	0.024		0.034
b1	1.14		1.70	0.044		0.066
c	0.49		0.70	0.019		0.027
c2	1.23		1.32	0.048		0.052
D	8.95		9.35	0.352		0.368
e	2.40		2.70	0.094		0.106
e1	4.95		5.15	0.194		0.202
E	10		10.40	0.393		0.410
L	13		14	0.511		0.551
L1	3.50		3.93	0.137		0.154
L2	1.27		1.40	0.050		0.055

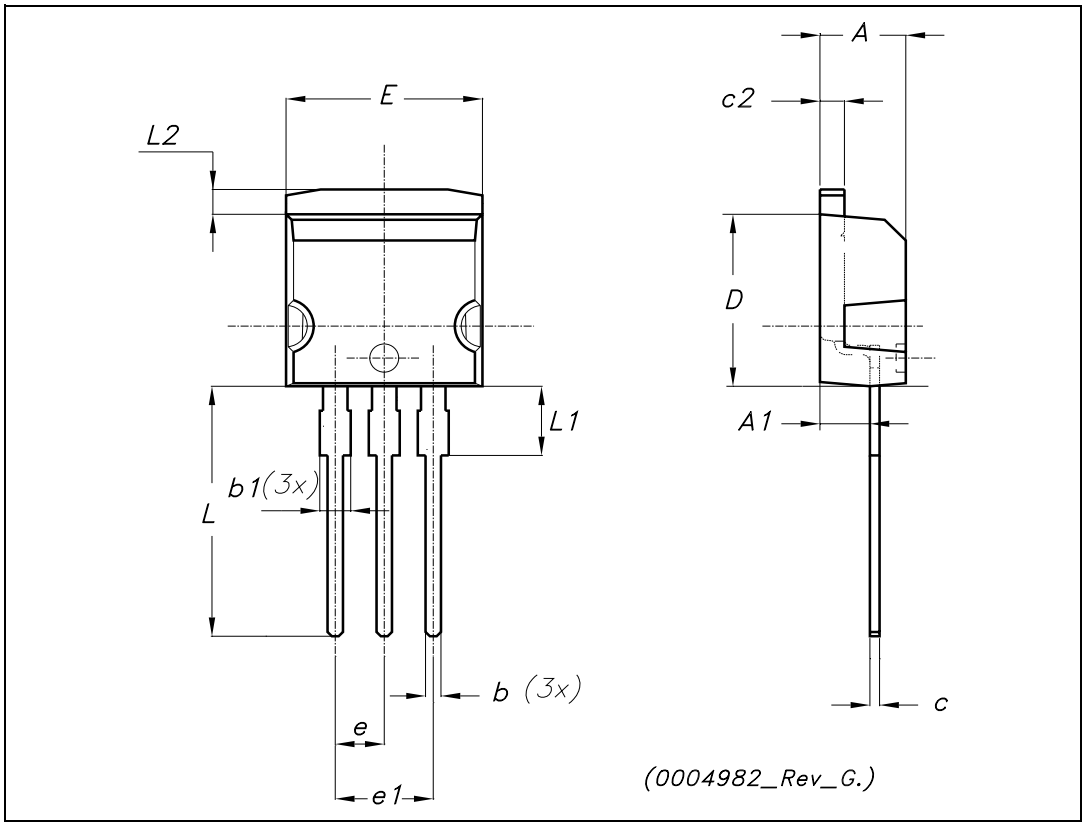

D²PAK MECHANICAL DATA

DIM.	mm.			inch		
	MIN.	TYP	MAX.	MIN.	TYP.	MAX.
A	4.4		4.6	0.173		0.181
A1	2.49		2.69	0.098		0.106
A2	0.03		0.23	0.001		0.009
B	0.7		0.93	0.027		0.036
B2	1.14		1.7	0.044		0.067
C	0.45		0.6	0.017		0.023
C2	1.23		1.36	0.048		0.053
D	8.95		9.35	0.352		0.368
D1		8			0.315	
E	10		10.4	0.393		
E1		8.5			0.334	
G	4.88		5.28	0.192		0.208
L	15		15.85	0.590		0.625
L2	1.27		1.4	0.050		0.055
L3	1.4		1.75	0.055		0.068
M	2.4		3.2	0.094		0.126
R		0.4			0.015	
V2	0º		4º			

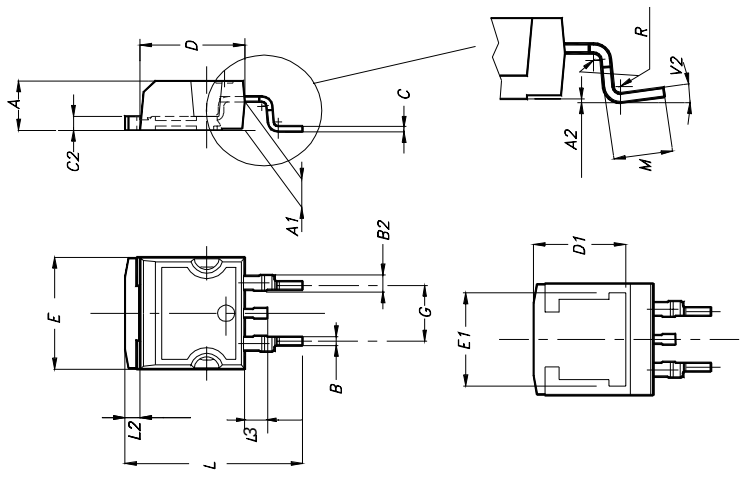

D²PAK FOOTPRINT

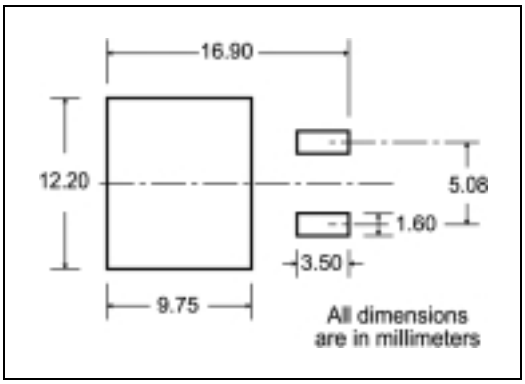

TAPE AND REEL SHIPMENT

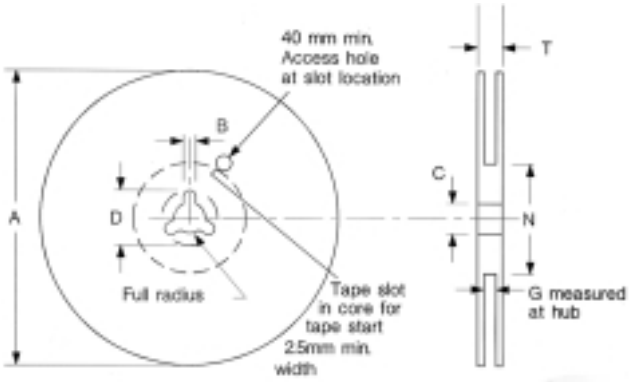

REEL MECHANICAL DATA

DIM.	mm		inch	
	MIN.	MAX.	MIN.	MAX.
A		330		12.992
B	1.5		0.059	
C	12.8	13.2	0.504	0.520
D	20.2		0795	
G	24.4	26.4	0.960	1.039
N	100		3.937	
T		30.4		1.197

BASE QTY	BULK QTY
1000	1000

TAPE MECHANICAL DATA

DIM.	mm		inch	
	MIN.	MAX.	MIN.	MAX.
A0	10.5	10.7	0.413	0.421
B0	15.7	15.9	0.618	0.626
D	1.5	1.6	0.059	0.063
D1	1.59	1.61	0.062	0.063
E	1.65	1.85	0.065	0.073
F	11.4	11.6	0.449	0.456
K0	4.8	5.0	0.189	0.197
P0	3.9	4.1	0.153	0.161
P1	11.9	12.1	0.468	0.476
P2	1.9	2.1	0.075	0.082
R	50		1.574	
T	0.25	0.35	0.0098	0.0137
W	23.7	24.3	0.933	0.956

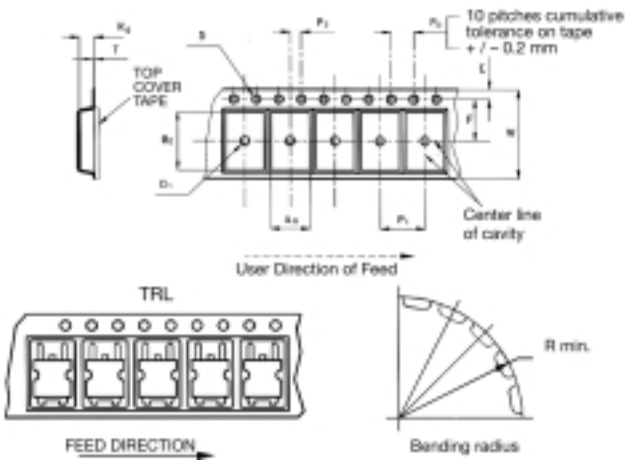

* on sales type

Table 8: Revision History

Date	Revision	Description of Changes
11/Apr/2005	1	First Release.

Information furnished is believed to be accurate and reliable. However, STMicroelectronics assumes no responsibility for the consequences of use of such information nor for any infringement of patents or other rights of third parties which may result from its use. No license is granted by implication or otherwise under any patent or patent rights of STMicroelectronics. Specifications mentioned in this publication are subject to change without notice. This publication supersedes and replaces all information previously supplied. STMicroelectronics products are not authorized for use as critical components in life support devices or systems without express written approval of STMicroelectronics.

The ST logo is a registered trademark of STMicroelectronics

All other names are the property of their respective owners

© 2005 STMicroelectronics - All Rights Reserved

STMicroelectronics group of companies

Australia - Belgium - Brazil - Canada - China - Czech Republic - Finland - France - Germany - Hong Kong - India - Israel - Italy - Japan - Malaysia - Malta - Morocco - Singapore - Spain - Sweden - Switzerland - United Kingdom - United States of America