查询ISD400216MSD供应商 捷多邦，专业PCB打样工厂，24小时加急出货

ChipCorder®

Product Brief

ISD4000 Series

Single-Chip Voice Record/Playback Devices
2- to 16-Minute Durations

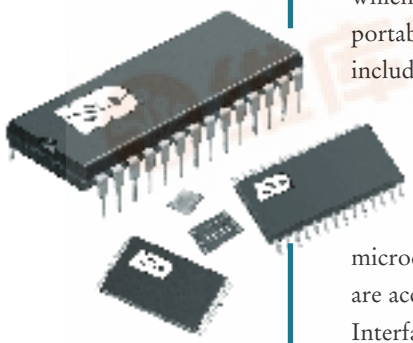

The ISD4000 ChipCorder® Products provide high-quality, 3-volt, single-chip record/playback solutions for 2- to 16-minute messaging applications which are ideal for cellular phones and other portable products. The CMOS based devices include an oscillator, antialiasing filter, smoothing filter, AutoMute® feature, audio amplifier, and high density, multilevel Flash storage array. The ISD4000 series is designed to be used in a microprocessor- or microcontroller-based system. Address and control are accomplished through a Serial Peripheral Interface (SPI) or Microwire serial interface to minimize pin count.

Recordings are stored in on-chip nonvolatile memory cells, providing zero-power message storage. This unique, single-chip solution is made possible through ISD's patented multilevel storage technology. Voice and audio signals are stored directly into memory in their natural form, providing high-quality, solid-state voice reproduction.

ISD40000 SERIES CAN BE USED IN VARIOUS APPLICATIONS:

- Cellular phones
- Portable Digital Recorders (PDR)
- Automotive
- Telephone Answering Devices (TAD)

FEATURES

- Single-chip voice record/playback solution
- Single +3 volt supply
- Low-power consumption
- Operating current:
  I_{CC} Play = 15 mA (typical)
  I_{CC} Rec = 25 mA (typical)
- Standby current 1 µA (typical)
- Single-chip durations of 2, 2.5, 3, 4, 5, 6, 8, 10, 12 and 16 minutes
- High-quality, natural voice/audio reproduction
- AutoMute feature provides background noise attenuation during periods of silence
- No speech compression algorithm development required
- Microcontroller SPI or Microwire serial interface
- Fully addressable to handle multiple messages
- Nonvolatile message storage
- Power consumption controlled by SPI or Microwire control register
- 100-year message retention (typical)
- 100K record cycles (typical)
- On-chip clock source
- Available in die form, PDIP, SOIC, TSOP and chip scale packaging (CSP)
- Extended temperature (–20°C to +70°C) and industrial temperature (–40°C to +85°C) versions available

ISD4000 SERIES BLOCK DIAGRAM

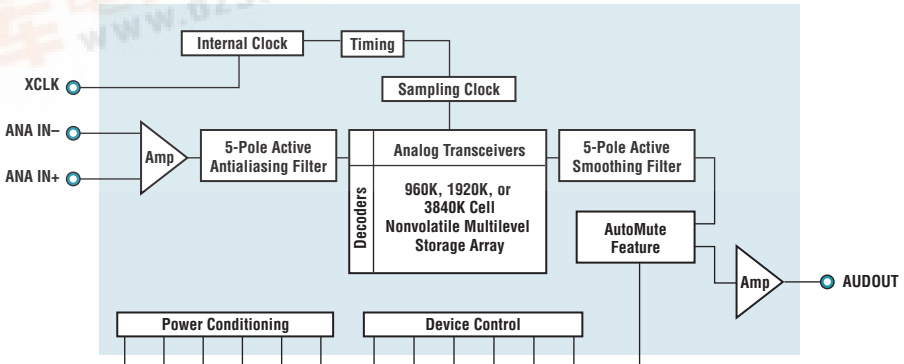

找PDF 维库一下 pdf.dzsc.com

ISD4000 SERIES AVAILABLE DURATIONS AND SAMPLING RATES

	8.0 KHz	6.4 KHz	5.3 KHz	4.0 KHz
ISD4002 Series (2–4 Minutes)	ISD4002-120 (120 Seconds)	ISD4002-150 (150 Seconds)	ISD4002-180 (180 Seconds)	ISD4002-240 (240 Seconds)
ISD4003 Series (4–8 Minutes)	ISD4003-04M (4 Minutes)	ISD4003-05M (5 Minutes)	ISD4003-06M (6 Minutes)	ISD4003-08M (8 Minutes)
ISD4004 Series (8–16 Minutes)	ISD4004-08M (8 Minutes)	ISD4004-10M (10 Minutes)	ISD4004-12M (12 Minutes)	ISD4004-16M (16 Minutes)

ISD4000 SERIES PACKAGE AND TEMPERATURE AVAILABILITY

	ISD4002 (2–4 Minute)					ISD4003 (4–8 Minute)					ISD4004 (8–16 Minute)				
	TSOP	PDIP	SOIC	DIE	CSP	TSOP	PDIP	SOIC	DIE	CSP	TSOP	PDIP	SOIC	DIE	CSP
Commercial Die (0° to +50°)				●					●					●	
Commercial Packaged (0° to +70°)	●	●	●		●	●	●	●		●	●	●	●		
Extended (–20° to +70°)	●					●					●				
Industrial (–40° to +85°)	●		●		●	●		●		●	●		●		

ORDERING THE ISD4000 PRODUCTS

ISD400__-__ __ __ __ __

Product Series

2 = Second Series (2–4 minutes)

3 = Third Series (4–8 minutes)

4 = Fourth Series (8–16 minutes)

Duration

120 = 120 seconds
150 = 150 seconds
180 = 180 seconds
240 = 240 seconds
04M = 4 minutes
05M = 5 minutes
06M = 6 minutes
08M = 8 minutes
10M = 10 minutes
12M = 12 minutes
16M = 16 minutes

Package Type

E = 28 Lead 8 × 13.4mm TSOP
P = 28 Lead 0.600-inch PDIP
S = 28 Lead 0.300-inch SOIC
X = Die
Z = Chip Scale Package (CSP, µBGA)

Special Temperature Field

Blank = Commercial Die (0°C to +50°C) or Commercial Packaged (0°C to +70°C)
D = Extended (–20°C to +70°C)
I = Industrial (–40°C to +85°C)

ISO9001 CERTIFIED

ISD, ChipCorder and AutoMute are registered trademarks of ISD.
All other trademarks are properties of their respective owners.
Printed in the U.S.A. ISD4000PB2-699

A Winbond Company

To Order Products or More Information:

ADDRESS
2727 N. First Street
San Jose, CA 95134

PHONE
1-800-677-0769 (US Only)
408-943-6666
408-544-1786 (Fax)

WEBSITE
www.isd.com

e-mail
info@isd.com