查询IRF9Z10供应商 捷多邦，专业PCB打样工厂，24小时加急出货

International
IOR Rectifier

PD - 90459A

IRF9Z10

HEXFET® Power MOSFET

- Dynamic dv/dt Rating
- Repetitive Avalanche Rated
- P-Channel
- 175°C Operating Temperature
- Fast Switching
- Ease of Paralleling
- Simple Drive Requirements

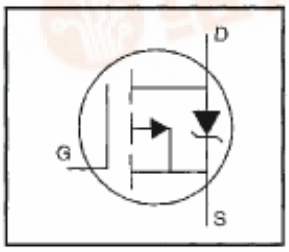

V_{DSS} = -60V

$R_{DS(on)}$ = 0.50Ω

I_D = -6.7A

Description

Third Generation HEXFETs from International Rectifier provide the designer with the best combination of fast switching, ruggedized device design, low on-resistance and cost-effectiveness.

The TO-220 package is universally preferred for all commercial-industrial applications at power dissipation levels to approximately 50 watts. The low thermal resistance and low package cost of the TO-220 contribute to its wide acceptance throughout the industry.

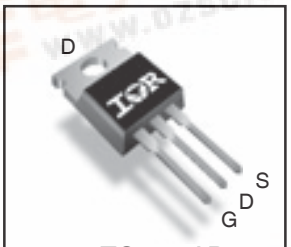

TO-220AB

G	D	S
Gate	Drain	Source

Absolute Maximum Ratings

	Parameter	Max.	Units
I_D @ T_C = 25°C	Continuous Drain Current, V_{GS} @ -10 V	-6.7	A
I_D @ T_C = 100°C	Continuous Drain Current, V_{GS} @ -10 V	-4.7	
I_{DM}	Pulsed Drain Current ①	-27	
P_D @ T_C = 25°C	Power Dissipation	43	W
	Linear Derating Factor	0.29	W/°C
V_{GS}	Gate-to-Source Voltage	±20	V
E_{AS}	Single Pulse Avalanche Energy ②	140	mJ
I_{AR}	Avalanche Current ①	-6.7	A
E_{AR}	Repetitive Avalanche Energy ①	4.3	mJ
dv/dt	Peak Diode Recovery dv/dt ③	-4.5	V/ns
T_J T_{STG}	Operating Junction and Storage Temperature Range	-55 to +175	°C
	Soldering Temperature, for 10 seconds	300 (1.6mm from case)	
	Mounting Torque, 6-32 or M3 screw	10 lbf•in (1.1 N•m)	

Thermal Resistance

	Parameter	Min.	Typ.	Max.	Units
$R_{\theta JC}$	Junction-to-Case	—	—	3.5	°C/W
$R_{\theta CS}$	Case-to-Sink, Flat, Greased Surface	—	0.50	—	
$R_{\theta JA}$	Junction-to-Ambient	—	—	62	

06/24/05

找PDF 维库一下 pdf.dzsc.com

Electrical Characteristics @ T_J = 25°C (unless otherwise specified)

	Parameter	Min.	Typ.	Max.	Units	Test Conditions
$V_{(BR)DSS}$	Drain-to-Source Breakdown Voltage	-60	—	—	V	V_{GS}=0V, I_D=-250μA
$\Delta V_{(BR)DSS}/\Delta T_J$	Breakdown Voltage Temp. Coefficient	—	-0.060	—	V/°C	Reference to 25°C, I_D=-1mA
$R_{DS(on)}$	Static Drain-to-Source On-Resistance	—	—	0.50	Ω	V_{GS}=-10V, I_D=-4.0A ④
$V_{GS(th)}$	Gate Threshold Voltage	-2.0	—	-4.0	V	V_{DS}=V_{GS}, I_D=-250μA
g_{fs}	Forward Transconductance	1.4	—	—	S	V_{DS}=-25V, I_D=-4.0A ④
I_{DSS}	Drain-to-Source Leakage Current	—	—	-100	μA	V_{DS}=-60V, V_{GS}=0V
		—	—	-500		V_{DS}=-48V, V_{GS}=0V, T_J=150°C
I_{GSS}	Gate-to-Source Forward Leakage	—	—	-100	nA	V_{GS}=-20V
	Gate-to-Source Reverse Leakage	—	—	100		V_{GS}=20V
Q_g	Total Gate Charge	—	—	12	nC	I_D=-6.7A
Q_{gs}	Gate-to-Source Charge	—	—	3.8		V_{DS}=-48V
Q_{gd}	Gate-to-Drain ("Miller") Charge	—	—	5.1		V_{GS}=-10V See Fig. 6 and 13 ④
$t_{d(on)}$	Turn-On Delay Time	—	11	—	ns	V_{DD}=-30V
t_r	Rise Time	—	63	—		I_D=-6.7A
$t_{d(off)}$	Turn-Off Delay Time	—	10	—		R_G=24Ω
t_f	Fall Time	—	31	—		R_D=4.0Ω See Figure 10 ④
L_D	Internal Drain Inductance	—	4.5	—	nH	Between lead, 6 mm (0.25in.) from package and center of die contact
L_S	Internal Source Inductance	—	7.5	—		
C_{iss}	Input Capacitance	—	270	—	pF	V_{GS}=0V
C_{oss}	Output Capacitance	—	170	—		V_{DS}=-25V
C_{rss}	Reverse Transfer Capacitance	—	31	—		f=1.0MHz See Figure 5

Source-Drain Ratings and Characteristics

	Parameter	Min.	Typ.	Max.	Units	Test Conditions
I_S	Continuous Source Current (Body Diode)	—	—	-6.7	A	MOSFET symbol showing the integral reverse p-n junction diode.
I_{SM}	Pulsed Source Current (Body Diode) ①	—	—	-27		
V_{SD}	Diode Forward Voltage	—	—	-5.5	V	T_J=25°C, I_S=-6.7A, V_{GS}=0V ④
t_{rr}	Reverse Recovery Time	—	80	160	ns	T_J=25°C, I_F=-6.7A
Q_{rr}	Reverse Recovery Charge	—	0.096	0.19	μC	di/dt=100A/μs ④
t_{on}	Forward Turn-On Time	Intrinsic turn-on time is neglegible (turn-on is dominated by L_S+L_D)				

Notes:

① Repetitive rating; pulse width limited by max. junction temperature (See Figure 11)

③ I_{SD}≤-6.7A, di/dt≤90A/μs, V_{DD}≤$V_{(BR)DSS}$, T_J≤175°C

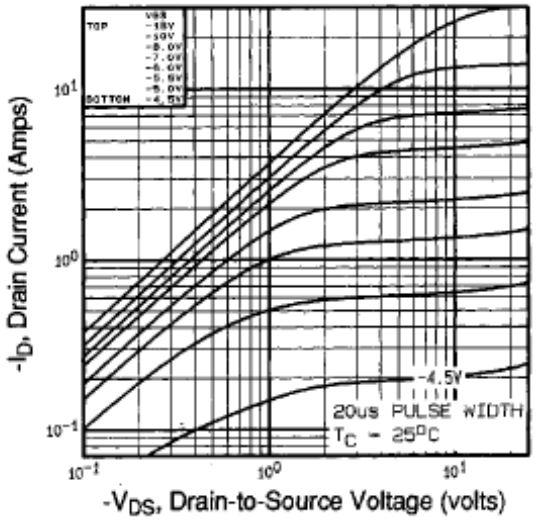

Fig 1. Typical Output Characteristics, T_C=25°C

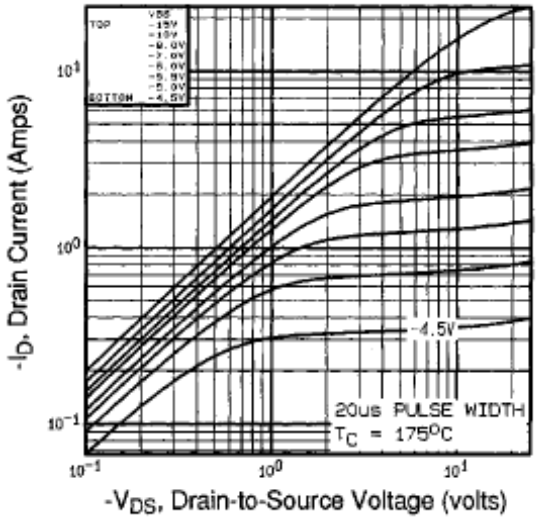

Fig 2. Typical Output Characteristics, T_C=175°C

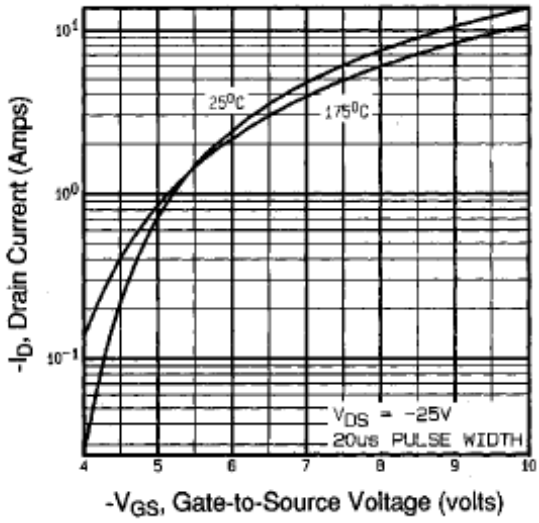

Fig 3. Typical Transfer Characteristics

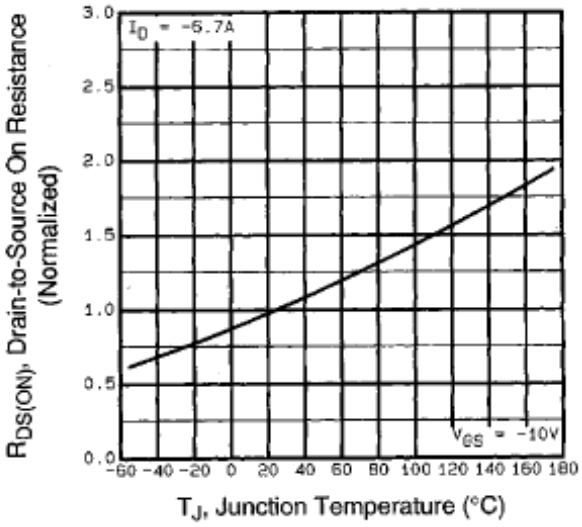

Fig 4. Normalized On-Resistance Vs. Temperature

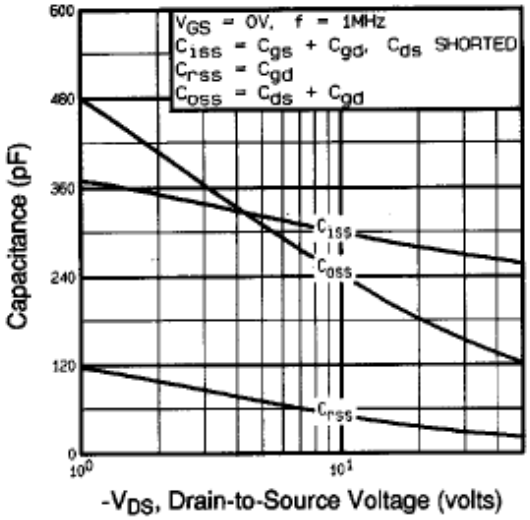

Fig 5. Typical Capacitance Vs. Drain-to-Source Voltage

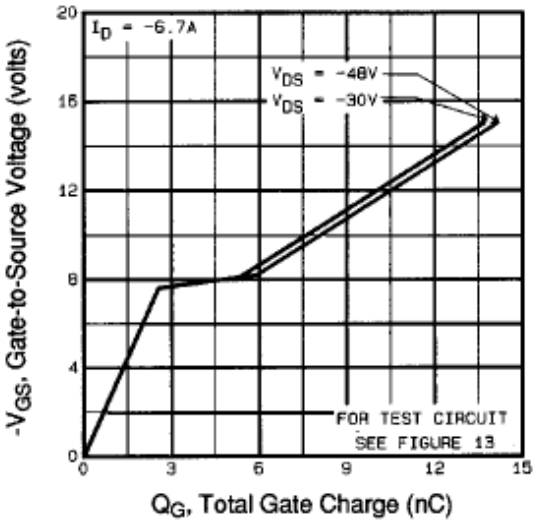

Fig 6. Typical Gate Charge Vs. Gate-to-Source Voltage

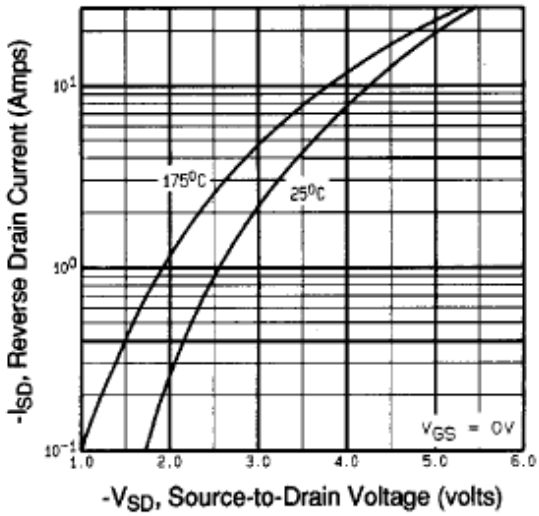

Fig 7. Typical Source-Drain Diode Forward Voltage

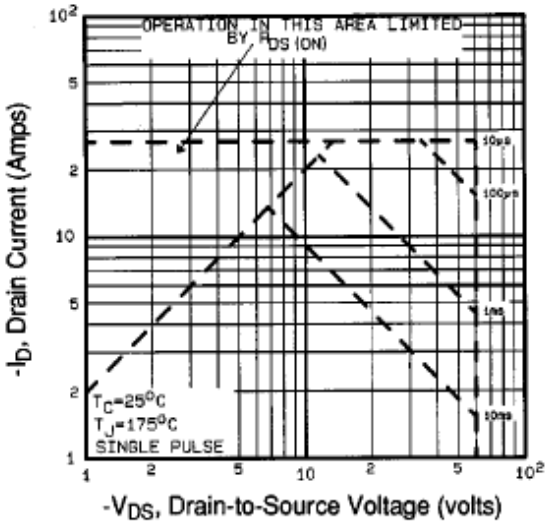

Fig 8. Maximum Safe Operating Area

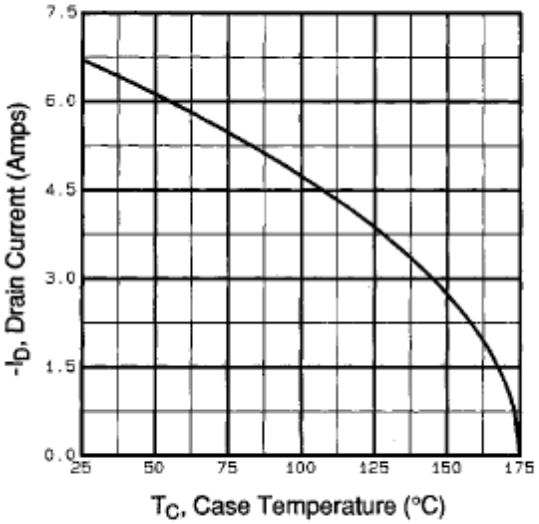

Fig 9. Maximum Drain Current Vs. Case Temperature

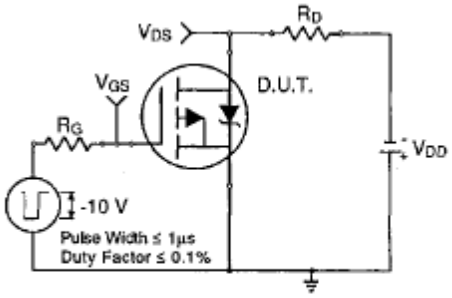

Fig 10a. Switching Time Test Circuit

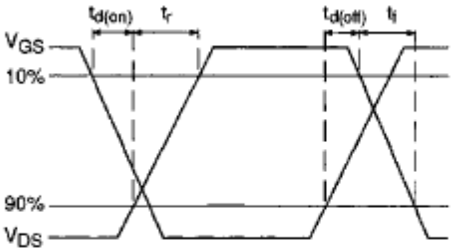

Fig 10b. Switching Time Waveforms

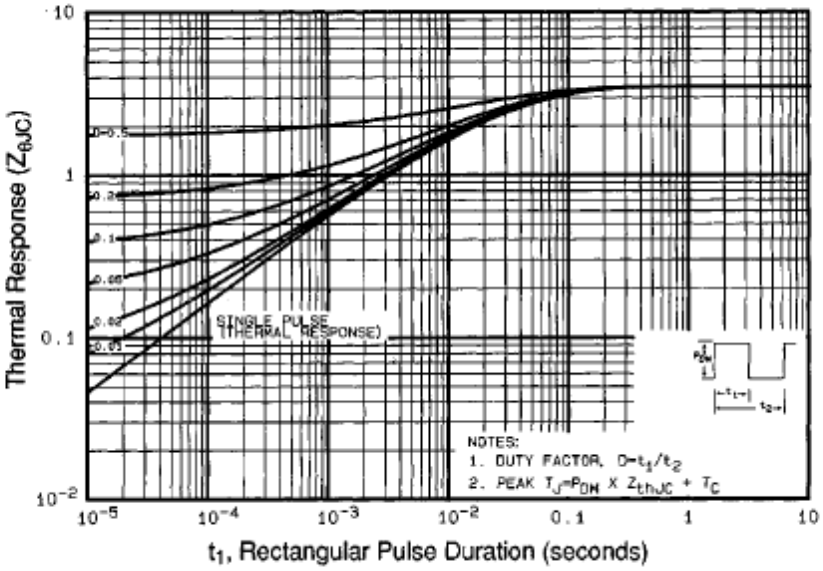

Fig 11. Maximum Effective Transient Thermal Impedance, Junction-to-Case

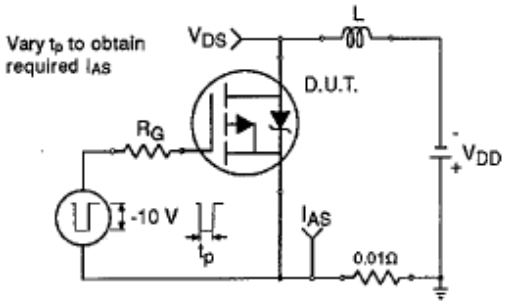

Fig 12a. Unclamped Inductive Test Circuit

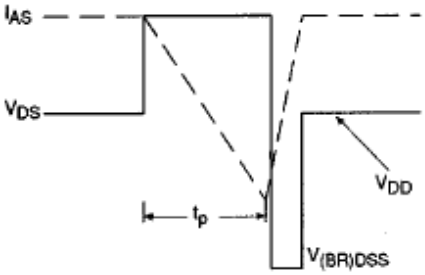

Fig 12b. Unclamped Inductive Waveforms

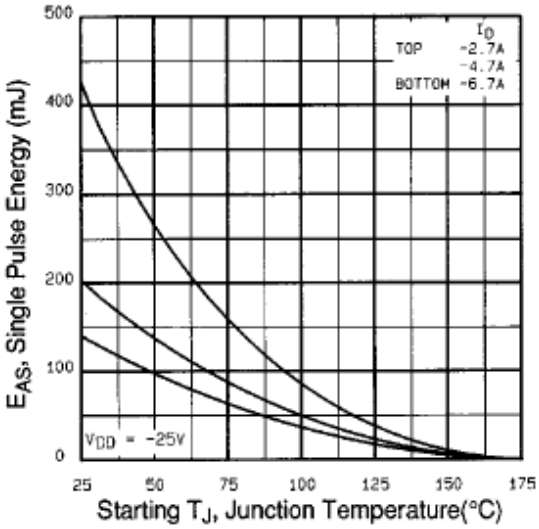

Fig 12c. Maximum Avalanche Energy Vs. Drain Current

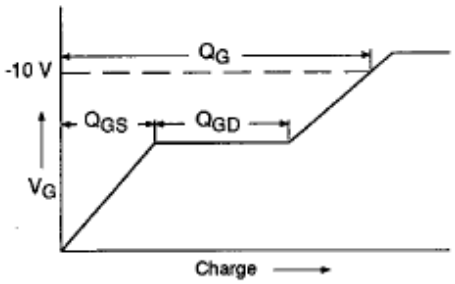

Fig 13a. Basic Gate Charge Waveform

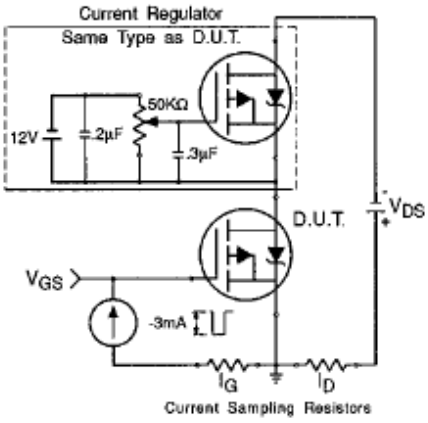

Fig 13b. Gate Charge Test Circuit

Peak Diode Recovery dv/dt Test Circuit

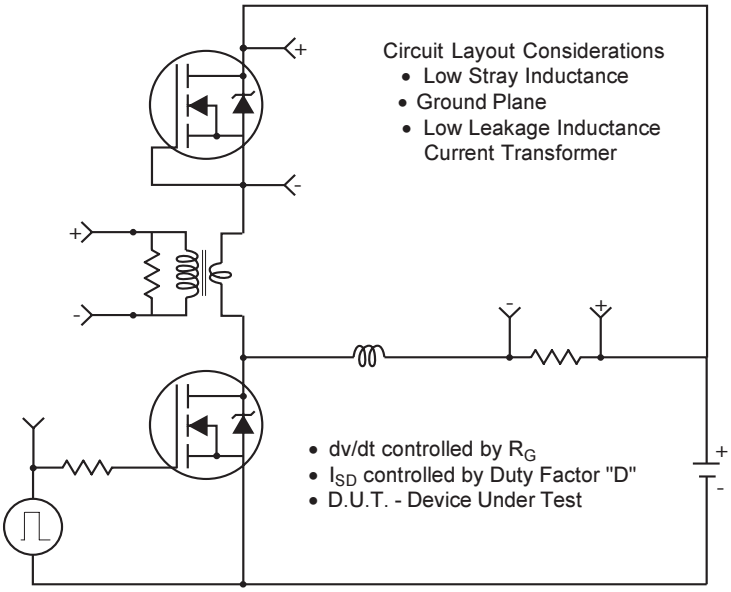

* Reverse Polarity for P-Channel
** Use P-Channel Driver for P-Channel Measurements

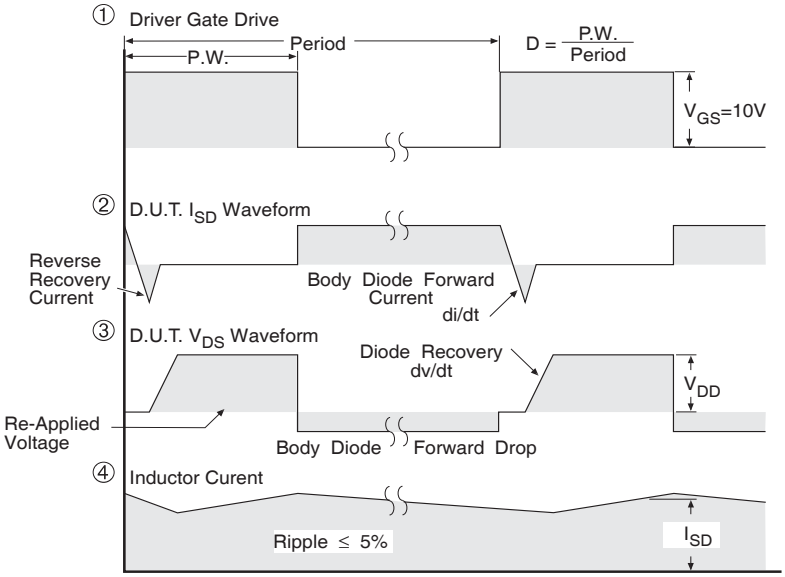

*** V_{GS} = 5.0V for Logic Level and 3V Drive Devices

Fig -14 For N Channel HEXFETS

TO-220AB Package Outline (Dimensions are shown in millimeters (inches))

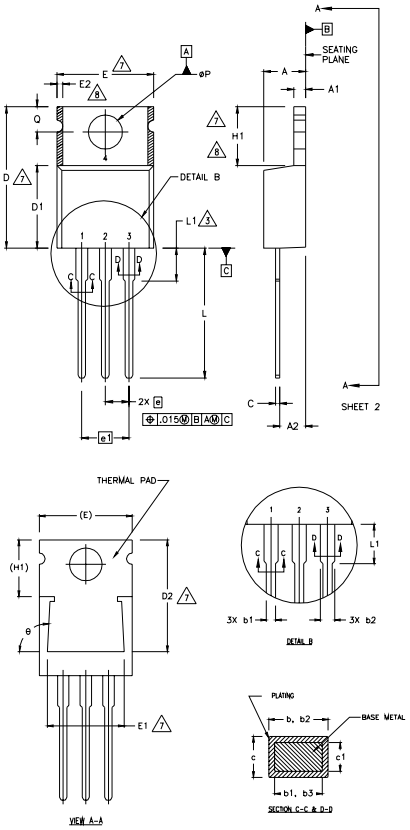

NOTES:

1. DIMENSIONING AND TOLERANCING PER ASME Y14.5 M- 1994.
2. DIMENSIONS ARE SHOWN IN INCHES [MILLIMETERS].
3. LEAD DIMENSION AND FINISH UNCONTROLLED IN L1.
4. DIMENSION D & E DO NOT INCLUDE MOLD FLASH. MOLD FLASH SHALL NOT EXCEED .005" (0.127) PER SIDE. THESE DIMENSIONS ARE MEASURED AT THE OUTERMOST EXTREMES OF THE PLASTIC BODY.
5. DIMENSION b1 & c1 APPLY TO BASE METAL ONLY.
6. CONTROLLING DIMENSION : INCHES.
7. THERMAL PAD CONTOUR OPTIONAL WITHIN DIMENSIONS E,H1,D2 & E1
8. DIMENSION E2 X H1 DEFINE A ZONE WHERE STAMPING AND SINGULATION IRREGULARITIES ARE ALLOWED.

LEAD ASSIGNMENTS

HEXFET
1.- GATE
2.- DRAIN
3.- SOURCE

IGBTs, CoPACK
1.- GATE
2.- COLLECTOR
3.- EMITTER

DIODES
1.- ANODE/OPEN
2.- CATHODE
3.- ANODE

SYMBOL	DIMENSIONS				NOTES
	MILLIMETERS		INCHES		
	MIN.	MAX.	MIN.	MAX.	
A	3.56	4.82	.140	.190	
A1	0.51	1.40	.020	.055	
A2	2.04	2.92	.080	.115	
b	0.38	1.01	.015	.040	
b1	0.38	0.96	.015	.038	5
b2	1.15	1.77	.045	.070	
b3	1.15	1.73	.045	.068	
c	0.36	0.61	.014	.024	
c1	0.36	0.56	.014	.022	5
D	14.22	16.51	.560	.650	4
D1	8.38	9.02	.330	.355	
D2	12.19	12.88	.480	.507	7
E	9.66	10.66	.380	.420	4,7
E1	8.38	8.89	.330	.350	7
e	2.54 BSC		.100 BSC		
e1	5.08		.200 BSC		
H1	5.85	6.55	.230	.270	7,8
L	12.70	14.73	.500	.580	
L1	–	6.35	–	.250	3
øP	3.54	4.08	.139	.161	
Q	2.54	3.42	.100	.135	
ø	90°–93°		90°–93°		

TO-220AB Part Marking Information

EXAMPLE: THIS IS AN IRF1010
LOT CODE 1789
ASSEMBLED ON WW 19, 1997
IN THE ASSEMBLY LINE "C"

Note: "P" in assembly line position indicates "Lead-Free"

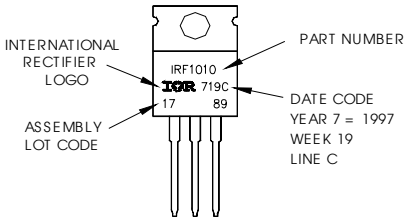

TO-220AB packages are not recommended for Surface Mount Application.

Data and specifications subject to change without notice.

International
IOR Rectifier

IR WORLD HEADQUARTERS: 233 Kansas St., El Segundo, California 90245, USA Tel: (310) 252-7105
TAC Fax: (310) 252-7903
Visit us at www.irf.com for sales contact information. 06/05