查询IRFU3709PBF供应商 捷多邦，专业PCB打样工厂，24小时加急出货

International
IOR Rectifier

PD - 95519A

SMPS MOSFET IRFU3709PbF

HEXFET® Power MOSFET

V_{DSS}	$R_{DS(on)}$ max	I_D
30V	9.0mΩ	90A ④

Applications

- High Frequency Isolated DC-DC Converters with Synchronous Rectification for Telecom and Industrial Use
- High Frequency Buck Converters for Computer Processor Power
- Lead-Free

Benefits

- Ultra-Low Gate Impedance
- Very Low RDS(on) at 4.5V V_{GS}
- Fully Characterized Avalanche Voltage and Current

I-Pak
IRFU3709

Absolute Maximum Ratings

Symbol	Parameter	Max.	Units
V_{DS}	Drain-Source Voltage	30	V
V_{GS}	Gate-to-Source Voltage	±20	V
I_D @ T_C = 25°C	Continuous Drain Current, V_{GS} @ 10V	90 ④	A
I_D @ T_C = 100°C	Continuous Drain Current, V_{GS} @ 10V	57 ④	
I_{DM}	Pulsed Drain Current①	360	
P_D @T_C = 25°C	Maximum Power Dissipation	120	W
P_D @T_C = 100°C	Maximum Power Dissipation	48	W
	Linear Derating Factor	0.96	mW/°C
T_J , T_{STG}	Junction and Storage Temperature Range	-55 to + 150	°C

Thermal Resistance

	Parameter	Typ.	Max.	Units
$R_{\theta JC}$	Junction-to-Case	——	1.04	°C/W
$R_{\theta JA}$	Junction-to-Ambient	——	110	

Notes ① through ④ are on page 9

12/06/04

找PDF 维库一下 pdf.dzsc.com

Static @ T_J = 25°C (unless otherwise specified)

	Parameter	Min.	Typ.	Max.	Units	Conditions
$V_{(BR)DSS}$	Drain-to-Source Breakdown Voltage	30	——	——	V	V_{GS} = 0V, I_D = 250µA
$\Delta V_{(BR)DSS}/\Delta T_J$	Breakdown Voltage Temp. Coefficient	——	0.029	——	V/°C	Reference to 25°C, I_D = 1mA
$R_{DS(on)}$	Static Drain-to-Source On-Resistance	——	6.9	9.0	mΩ	V_{GS} = 10V, I_D = 15A ③
		——	7.9	10.5		V_{GS} = 4.5V, I_D = 12A ③
$V_{GS(th)}$	Gate Threshold Voltage	1.0	——	3.0	V	V_{DS} = V_{GS}, I_D = 250µA
I_{DSS}	Drain-to-Source Leakage Current	——	——	20	µA	V_{DS} = 24V, V_{GS} = 0V
		——	——	100		V_{DS} = 24V, V_{GS} = 0V, T_J = 125°C
I_{GSS}	Gate-to-Source Forward Leakage	——	——	200	nA	V_{GS} = 16V
	Gate-to-Source Reverse Leakage	——	——	-200		V_{GS} = -16V

Dynamic @ T_J = 25°C (unless otherwise specified)

Symbol	Parameter	Min.	Typ.	Max.	Units	Conditions
g_{fs}	Forward Transconductance	53	——	——	S	V_{DS} = 15V, I_D = 30A
Q_g	Total Gate Charge	——	27	41	nC	I_D = 15A
Q_{gs}	Gate-to-Source Charge	——	6.7	——		V_{DS} = 15V
Q_{gd}	Gate-to-Drain ("Miller") Charge	——	9.7	——		V_{GS} = 4.5V ③
Q_{oss}	Output Gate Charge	——	22	——		V_{GS} = 0V, V_{DS} = 10V
$t_{d(on)}$	Turn-On Delay Time	——	11	——	ns	V_{DD} = 15V
t_r	Rise Time	——	171	——		I_D = 30A
$t_{d(off)}$	Turn-Off Delay Time	——	21	——		R_G = 1.8Ω
t_f	Fall Time	——	9.2	——		V_{GS} = 4.5V ③
C_{iss}	Input Capacitance	——	2672	——	pF	V_{GS} = 0V
C_{oss}	Output Capacitance	——	1064	——		V_{DS} = 16V
C_{rss}	Reverse Transfer Capacitance	——	109	——		f = 1.0MHz

Avalanche Characteristics

Symbol	Parameter	Typ.	Max.	Units
E_{AS}	Single Pulse Avalanche Energy②	——	382	mJ
I_{AR}	Avalanche Current①	——	30	A

Diode Characteristics

Symbol	Parameter	Min.	Typ.	Max.	Units	Conditions
I_S	Continuous Source Current (Body Diode)	——	——	90④	A	MOSFET symbol showing the integral reverse p-n junction diode. 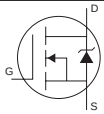
I_{SM}	Pulsed Source Current (Body Diode) ①	——	——	360		
V_{SD}	Diode Forward Voltage	——	0.88	1.3	V	T_J = 25°C, I_S = 30A, V_{GS} = 0V ③
		——	0.82	——		T_J = 125°C, I_S = 30A, V_{GS} = 0V ③
t_{rr}	Reverse Recovery Time	——	48	72	ns	T_J = 25°C, I_F = 30A, V_R=15V
Q_{rr}	Reverse Recovery Charge	——	46	69	nC	di/dt = 100A/µs ③
t_{rr}	Reverse Recovery Time	——	48	72	ns	T_J = 125°C, I_F = 30A, V_R=15V
Q_{rr}	Reverse Recovery Charge	——	52	78	nC	di/dt = 100A/µs ③

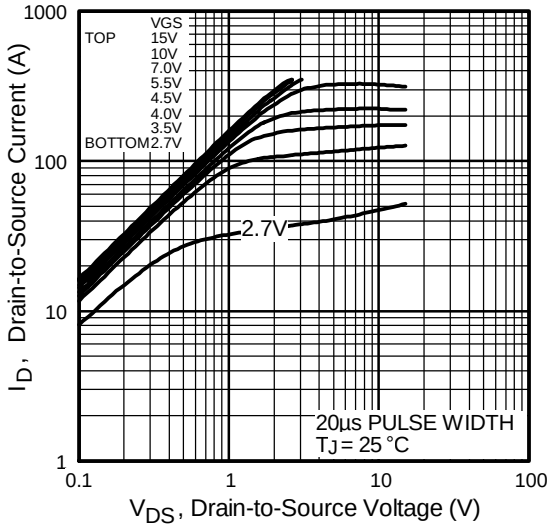

Fig 1. Typical Output Characteristics

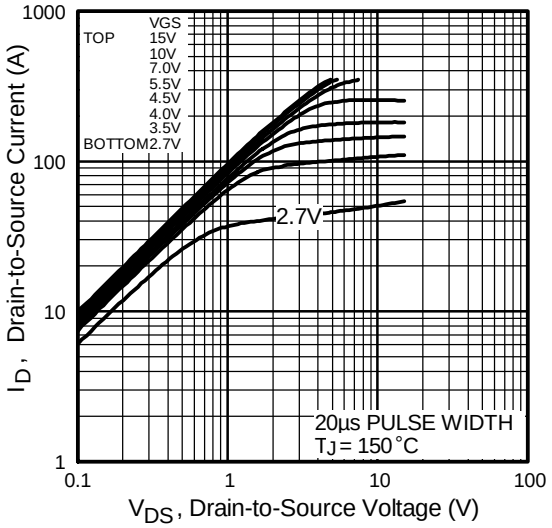

Fig 2. Typical Output Characteristics

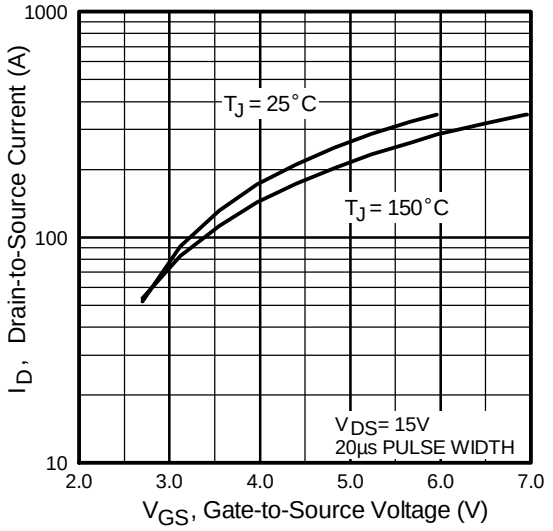

Fig 3. Typical Transfer Characteristics

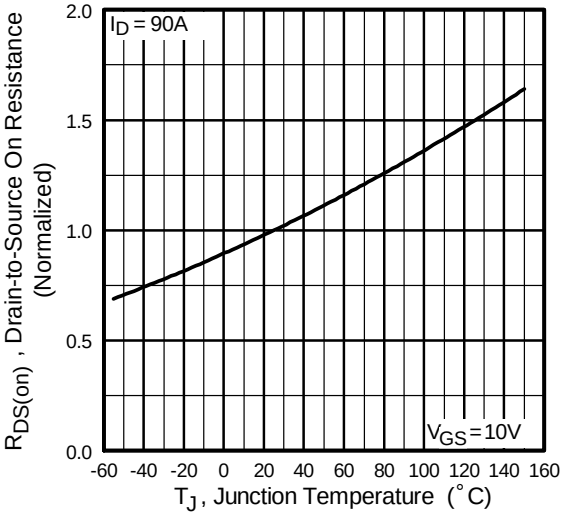

Fig 4. Normalized On-Resistance Vs. Temperature

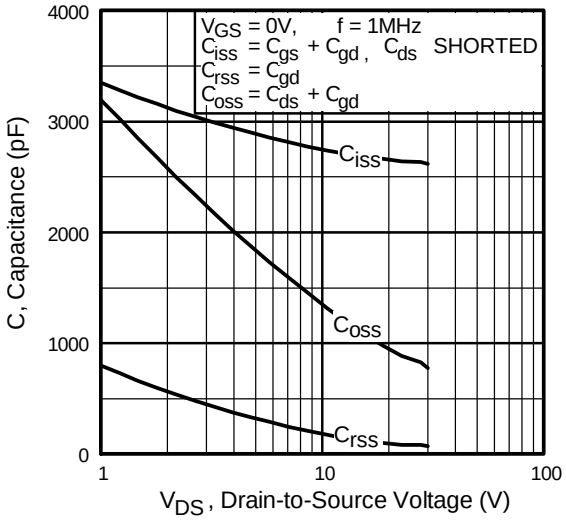

Fig 5. Typical Capacitance Vs. Drain-to-Source Voltage

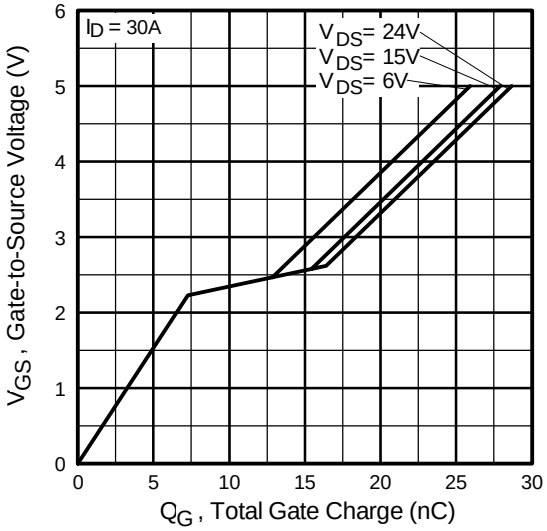

Fig 6. Typical Gate Charge Vs. Gate-to-Source Voltage

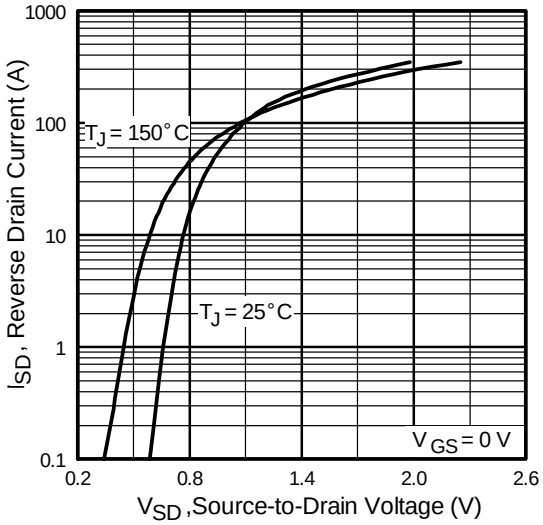

Fig 7. Typical Source-Drain Diode Forward Voltage

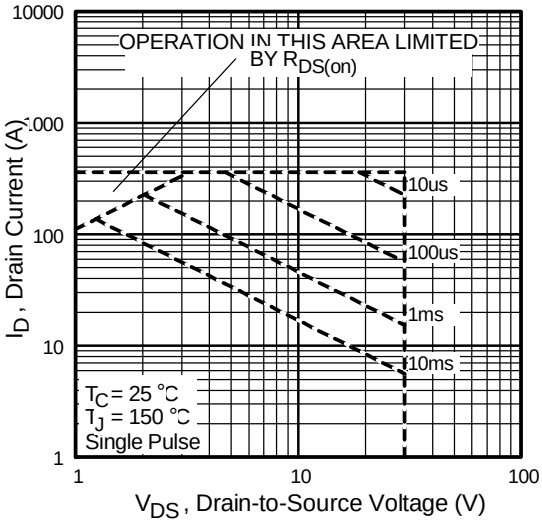

Fig 8. Maximum Safe Operating Area

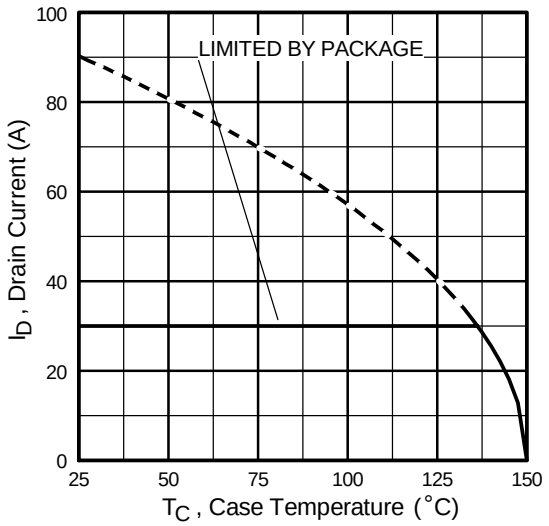

Fig 9. Maximum Drain Current Vs. Case Temperature

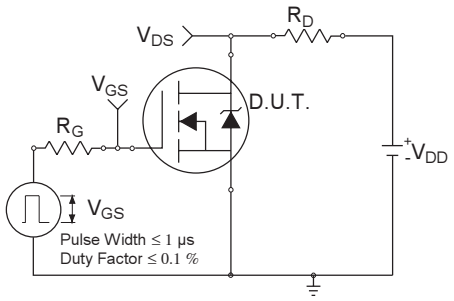

Fig 10a. Switching Time Test Circuit

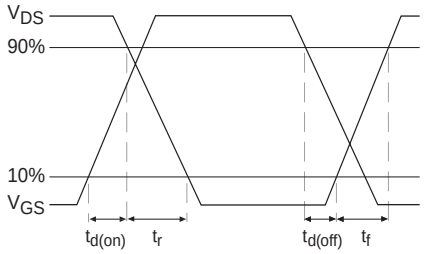

Fig 10b. Switching Time Waveforms

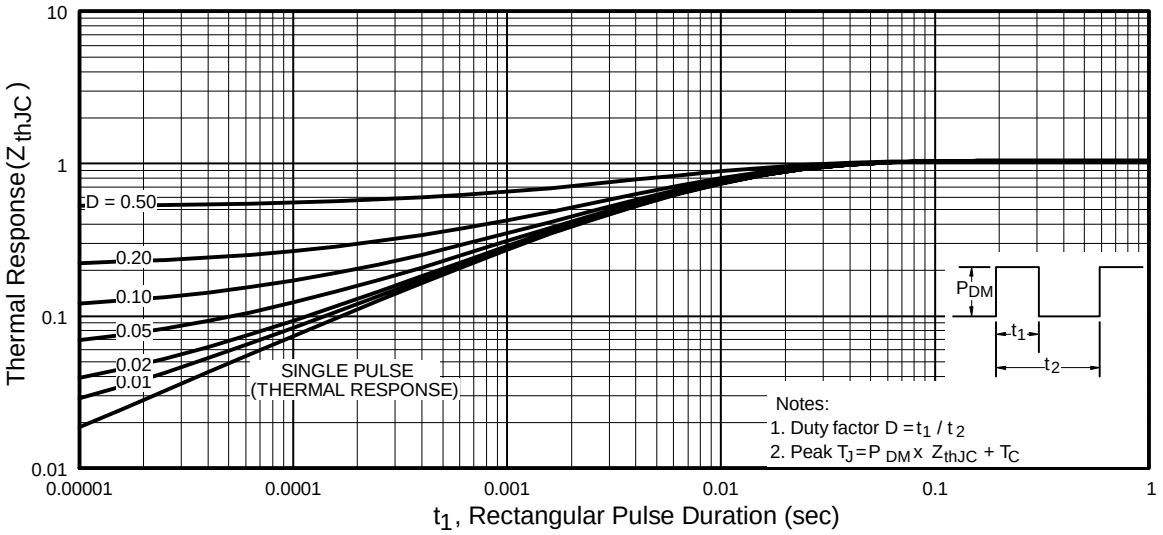

Fig 11. Maximum Effective Transient Thermal Impedance, Junction-to-Case

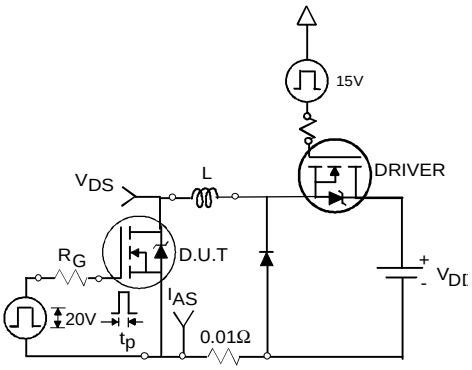

Fig 12a. Unclamped Inductive Test Circuit

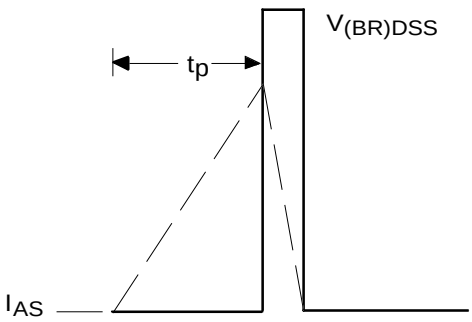

Fig 12b. Unclamped Inductive Waveforms

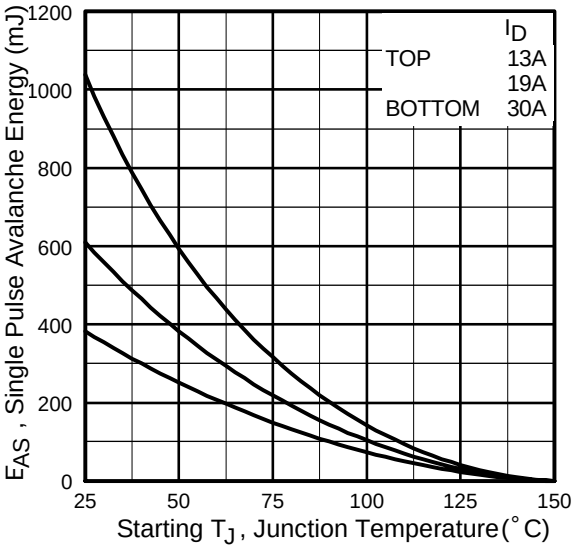

Fig 12c. Maximum Avalanche Energy Vs. Drain Current

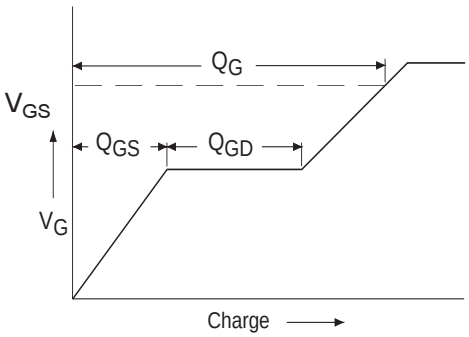

Fig 13a. Basic Gate Charge Waveform

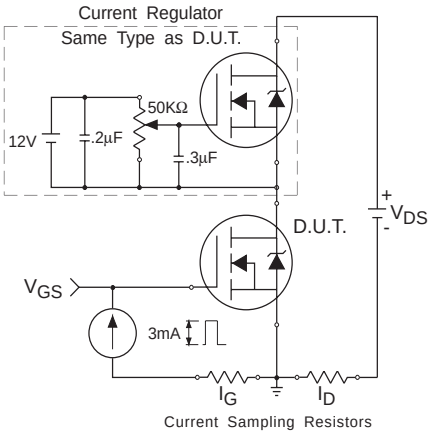

Fig 13b. Gate Charge Test Circuit

Peak Diode Recovery dv/dt Test Circuit

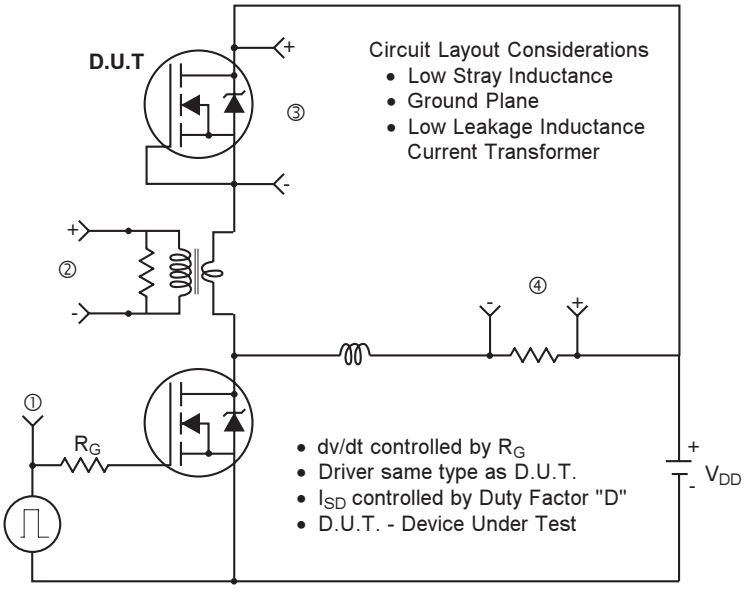

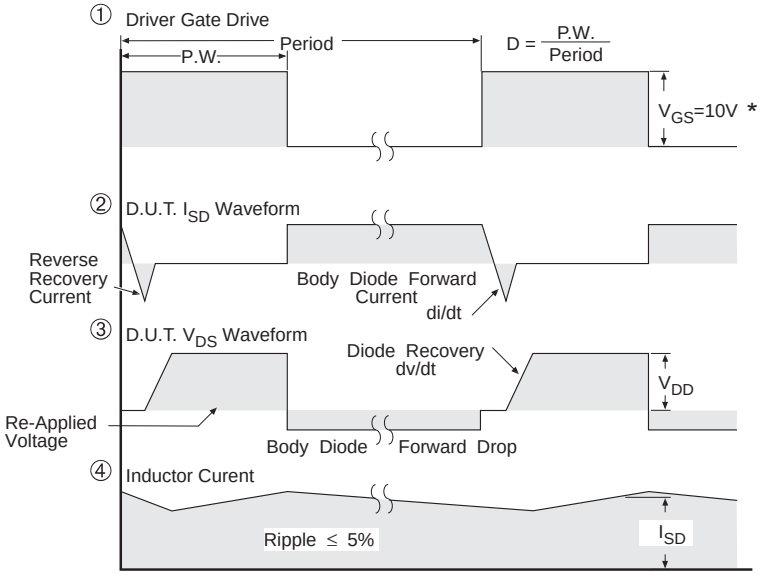

* V_{GS} = 5V for Logic Level Devices

Fig 14. For N-Channel HEXFET® Power MOSFETs

I-Pak (TO-251AA) Package Outline

Dimensions are shown in millimeters (inches)

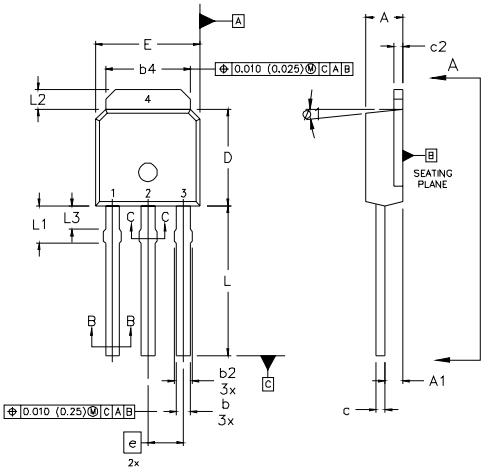

NOTES:

1. DIMENSIONING AND TOLERANCING PER ASME Y14.5 M- 1994.
2. DIMENSIONS ARE SHOWN IN MILLIMETERS [INCHES].
3. DIMENSION D & E DO NOT INCLUDE MOLD FLASH. MOLD FLASH SHALL NOT EXCEED 0.005" (0.127) PER SIDE. THESE DIMENSIONS ARE MEASURED AT THE OUTERMOST EXTREMES OF THE PLASTIC BODY.
4. THERMAL PAD CONTOUR OPTION WITHIN DIMENSION b4, L2, E1 & D1.
5. LEAD DIMENSION UNCONTROLLED IN L3.
6. DIMENSION b1, b3 APPLY TO BASE METAL ONLY.
7. OUTLINE CONFORMS TO JEDEC OUTLINE TO-251AA.
8. CONTROLLING DIMENSION : INCHES.

SYMBOL	DIMENSIONS				NOTES
	MILLIMETERS		INCHES		
	MIN.	MAX.	MIN.	MAX.	
A	2.18	2.39	0.086	.094	
A1	0.89	1.14	0.035	0.045	
b	0.64	0.89	0.025	0.035	
b1	0.64	0.79	0.025	0.031	4
b2	0.76	1.14	0.030	0.045	
b3	0.76	1.04	0.030	0.041	
b4	5.00	5.46	0.195	0.215	4
c	0.46	0.61	0.018	0.024	
c1	0.41	0.56	0.016	0.022	
c2	.046	0.86	0.018	0.035	
D	5.97	6.22	0.235	0.245	3, 4
D1	5.21	-	0.205	-	4
E	6.35	6.73	0.250	0.265	3, 4
E1	4.32	-	0.170	-	4
e	2.29		0.090 BSC		
L	8.89	9.60	0.350	0.380	
L1	1.91	2.29	0.075	0.090	
L2	0.89	1.27	0.035	0.050	4
L3	1.14	1.52	0.045	0.060	5
ø1	0°	15°	0°	15°	

LEAD ASSIGNMENTS

HEXFET

1.- GATE
2.- DRAIN
3.- SOURCE
4.- DRAIN

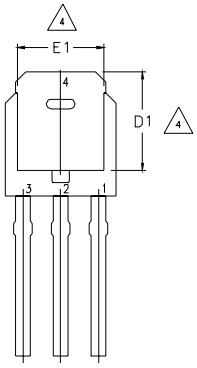

VIEW A-A

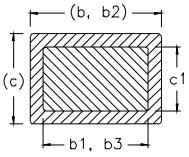

SECTION A-A

I-Pak (TO-251AA) Part Marking Information

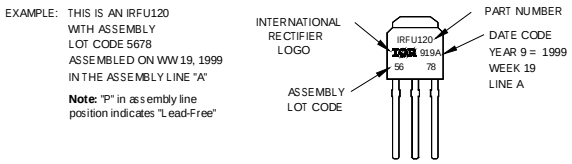

OR

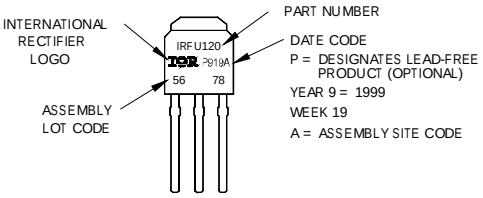

Notes:

① Repetitive rating; pulse width limited by max. junction temperature.

② Starting $T_J = 25°C$, L = 0.85mH $R_G = 25\Omega$, $I_{AS} = 30A$.

③ Pulse width ≤ 400µs; duty cycle ≤ 2%.

④ Calculated continuous current based on maximum allowable junction temperature. Package limitation current is 30A.

Data and specifications subject to change without notice.
This product has been designed and qualified for the industrial market.
Qualification Standards can be found on IR's Web site.

International
IOR Rectifier

IR WORLD HEADQUARTERS: 233 Kansas St., El Segundo, California 90245, USA Tel: (310) 252-7105
TAC Fax: (310) 252-7903
Visit us at www.irf.com for sales contact information.12/04