查询KA-3528SURC供应商 捷多邦，专业PCB打样工厂，24小时加急出货

Kingbright

3.5x2.8 mm SMD CHIP LED LAMP

KA-3528SURC HYPER RED

Features

- SINGLE COLOR.
- SUITABLE FOR ALL SMT ASSEMBLY AND SOLDER PROCESS.
- AVAILABLE ON TAPE AND REEL.
- IDEAL FOR BACKLIGHTING.
- PACKAGE : 1500PCS / REEL.
- RoHS COMPLIANT.

Description

The Hyper Red source color devices are made with DH InGaAlP on GaAs substrate Light Emitting Diode.

Package Dimensions

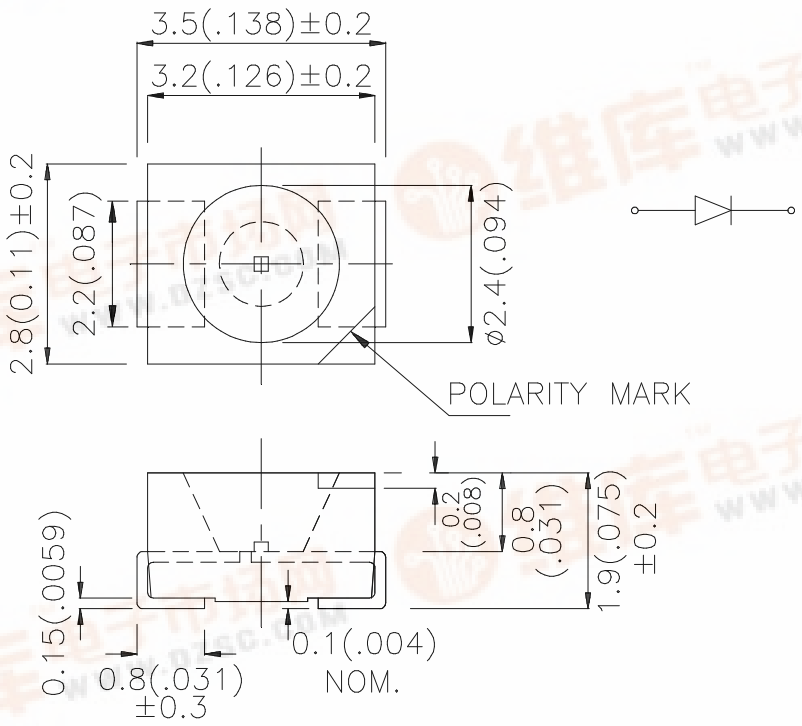

Notes:
1. All dimensions are in millimeters (inches).
2. Tolerance is ±0.25(0.01") unless otherwise noted.
3.Specifications are subject to change without notice.

找PDF 维库一下 pdf.dzsc.com

Kingbright

Selection Guide

Part No.	Dice	Lens Type	Iv (mcd) @ 20mA		Viewing Angle
			Min.	Typ.	2θ1/2
KA-3528SURC	HYPER RED (InGaAlP)	WATER CLEAR	110	230	120°

Note:
1. θ1/2 is the angle from optical centerline where the luminous intensity is 1/2 the optical centerline value.

Electrical / Optical Characteristics at T_A=25°C

Symbol	Parameter	Device	Typ.	Max.	Units	Test Conditions
λpeak	Peak Wavelength	Hyper Red	640		nm	I_F=20mA
λD	Dominant Wavelength	Hyper Red	628		nm	I_F=20mA
Δλ1/2	Spectral Line Half-width	Hyper Red	27		nm	I_F=20mA
C	Capacitance	Hyper Red	45		pF	V_F=0V;f=1MHz
V_F	Forward Voltage	Hyper Red	1.9	2.5	V	I_F=20mA
I_R	Reverse Current	Hyper Red		10	uA	V_R = 5V

Absolute Maximum Ratings at T_A=25°C

Parameter	Hyper Red	Units
Power dissipation	125	mW
DC Forward Current	50	mA
Peak Forward Current [1]	185	mA
Reverse Voltage	5	V
Operating / Storage Temperature	-40°C To +85°C	

Note:
1. 1/10 Duty Cycle, 0.1ms Pulse Width.

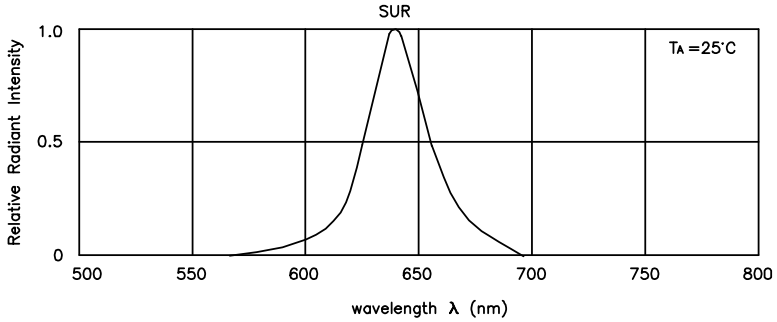

RELATIVE INTENSITY Vs. WAVELENGTH

Hyper Red **KA-3528SURC**

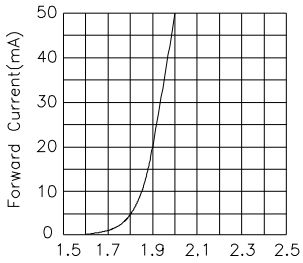

FORWARD CURRENT Vs. FORWARD VOLTAGE

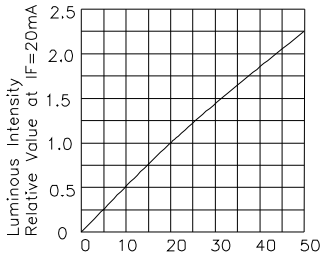

LUMINOUS INTENSITY Vs. FORWARD CURRENT

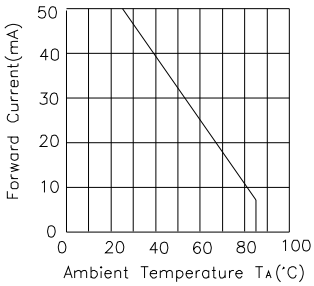

FORWARD CURRENT DERATING CURVE

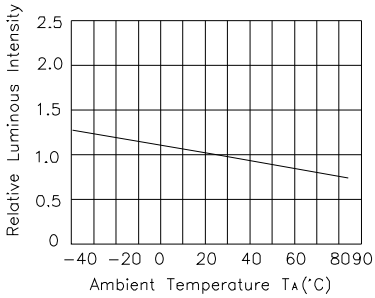

LUMINOUS INTENSITY Vs. AMBIENT TEMPERATURE

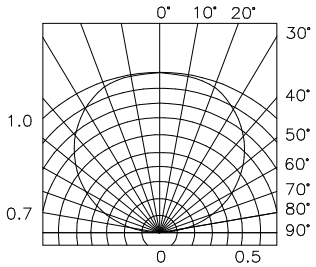

SPATIAL DISTRIBUTION

KA-3528SURC

Reflow Soldering Profile For Lead-free SMT Process.

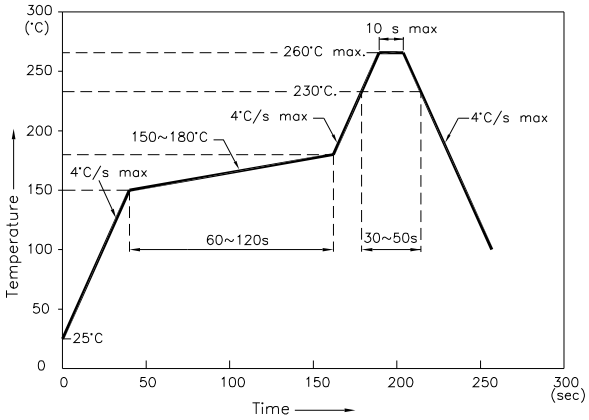

NOTES:

1. We recommend the reflow temperature 245°C(+/-5°C).The maximum soldering temperature should be limited to 260°C.
2. Don't cause stress to the epoxy resin while it is exposed to high temperature.
3. Number of reflow process shall be 2 times or less.

Recommended Soldering Pattern
(Units : mm)

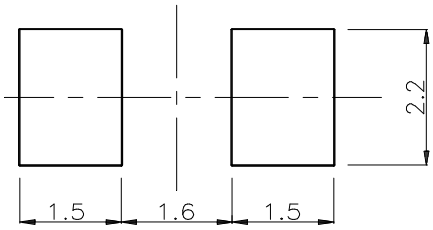

Tape Specifications
(Units : mm)

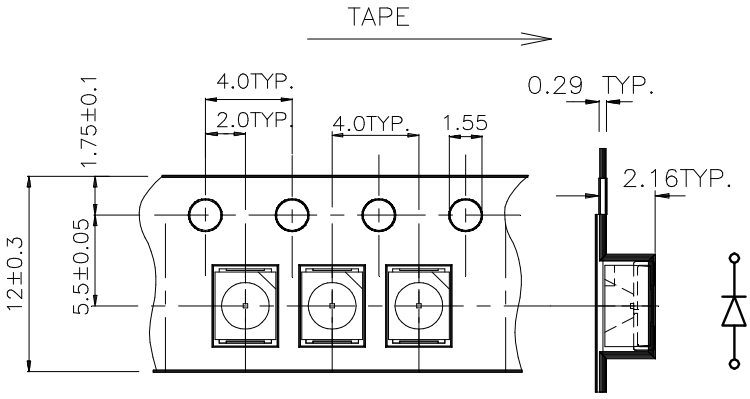

Remarks:
If special sorting is required (e.g. binning based on forward voltage,luminous intensity, or wavelength), the typical accuracy of the sorting process is as follows:
1. Wavelength: +/-1nm
2. Luminous Intensity: +/-15%
3. Forward Voltage: +/-0.1V
Note: Accuracy may depend on the sorting parameters.