查询N2576S-5供应商 捷多邦，专业PCB打样工厂，24小时加急出货

NIKO-SEM

52 KHz 3A Step-Down Switching Voltage Regulator (SVR)

N2576
TO-263, TO220

GENERAL DESCRIPTION

The N2576 Series switching voltage regulators (SVR) are monolithic integrated circuits that provide all the active functions for a step-down (buck) switching regulator, Both series are capable of driving 3 A load respectively with excellent line and load regulation.

The N2576 Series SVR include a switching regulator and compensation network all within the same package. Just add a choke, catch diode and two capacitors to obtain an efficient DC-to-DC converter. The output switch includes cycle-by-cycle current limit -ing, as well as thermal shutdown for full protection under fault conditions.

The N2576 Series SVR offer replacement for popular 3 terminal linear regulators by providing higher efficiency with reduced heat sink size. In many applications a heat sink will not be required.

FEATURES

- Pin compatible with industry products of LM2576 Series
- Adjustable output versions
- Wide output voltage range, 1.23V to 27V for adjustable output version
- DC-to-DC buck converter requiring only 4 external parts
- 52 KHz fixed frequency internal oscillator
- TTL shutdown capability, low power stand -by mode
- High efficiency
- Uses readily available standard inductors

APPLICATIONS

- Simple high-efficiency step-down (buck) regulator
- Positive to negative converter (Inverting Buck-Boost)
- Isolated Fly back Converter using mini-mum number of external parts
- Powering portable instrument, Set-Top Box, LCD Monitor, Scanner, I.A, Easy PC
- SMPS Post-Regulator

TYPICAL APPLICATION

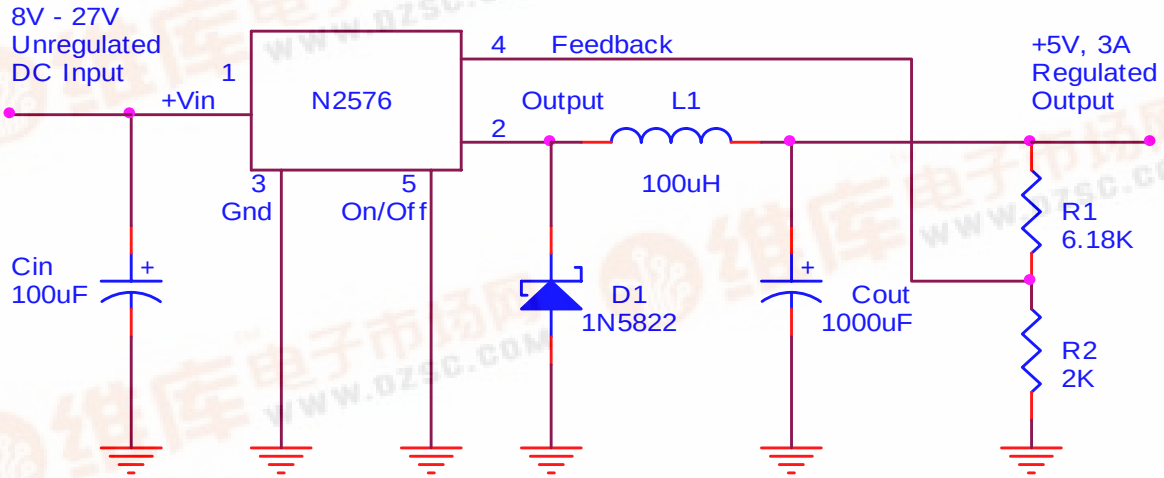

* V_{OUT} = 1.23V (1 + R1 / R2)

Adjustable Regulator in Fixed Output Application

找PDF 维库一下 pdf.dzsc.com

ABSOLUTE MAXIMUM RATINGS

- Maximum Supply Voltage: 30V
- ON/OFF Pin Input Voltage: $-0.3 \leq V \leq +V_I$
- Output Voltage to Ground (Stead State): -1V
- Power Dissipation: Internally Limited
- Thermal Resistance Junction to Case, θ_{JC}: 2.0°C/W
- Thermal Resistance Junction to Ambient, θ_{JA}
  TO-220: 50°C/W
  TO-263: 60°C/W
- Operating Junction Temperature Range: -40 to 125°C
- Storage Temperature Range: -65 to 150°C
- Lead Temperature (Soldering, 10 Seconds): 260°C

ELECTRICAL CHARACTERISTICS (Unless otherwise specified, T_A = 25°C.)

Parameter	Symbol	Test Conditions	Typical	Limits
Feedback Voltage	V_{OUT}	V_{IN} = 12V, V_{OUT} = 5V I_{LOAD} = 0.5A (N2576)	1.230V	$1.217V_{Min}$ $1.243V_{Max}$
Feedback Voltage	V_{OUT}	$8V \leq V_{IN} \leq 27V$ $0.5A \leq I_{LOAD} \leq 3A$ (N2576)	1.230V	$1.193V_{Min}$ $1.267V_{Max}$
Efficiency	η	V_{IN} = 12V, V_{OUT} = 5V I_{OUT} = 3A (N2576)	77%	
Feedback Bias Current	I_B	V_{OUT} = 5V	50nA	100nA
Oscillator Frequency	F_{OSC}		52 KHz	47 KHz (Min) 58 KHz (Max)
Saturation Voltage	V_{SAT}	I_{OUT} = 3A (N2576)	1.4V	$1.8V_{Max}$
Current Limit	I_{CL}	N2576	6.0A	4.0A ~ 7.0A
ON/OFF Pin Logic Input Level	V_{IH}	V_{OUT} = 0V	1.4V	2.2V (Min)
	V_{IL}	V_{OUT} = Nominal Output Voltage	1.2V	1.0V (Max)
ON/OFF Pin Logic Input Current	I_{IH}	ON/OFF Pin = 5V (OFF)	12µA	30µA (Max)
	I_{IL}	ON/OFF Pin = 0V (ON)	0µA	10µA (Max)

DEVICE SELECTION GUIDE

Device	N2576S	N2576S-3.3	N2576S-5	N2576T	N2576T-3.3	N2576T-5
Voltage (V)	ADJ	3.3	5	ADJ	3.3	5
Current (A)	3					
Package	TO-263	TO-263	TO-263	TO-220	TO-220	TO-220

PIN CONFIGURATIONS

5 -LEAD TO-220 (T)

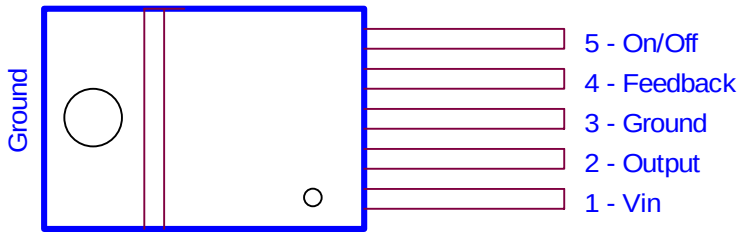

5 -LEAD TO-263 (S)

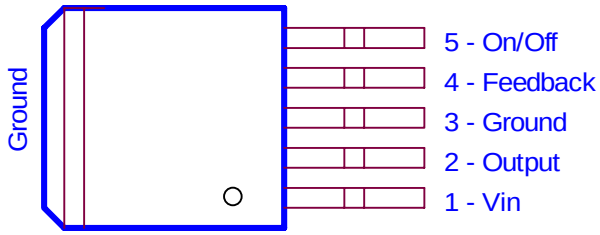

TO-220 (5-Lead) MECHANICAL DATA

Dimension	mm			Dimension	mm		
	Min.	Typ.	Max.		Min.	Typ.	Max.
A	9.78	10.16	10.54	H	1.57	1.7	1.83
B	2.61	2.74	2.87	I		6.81	
C				J	4.4	4.6	4.8
D	28.5	28.9	29.3	K	1.14	1.27	1.4
E	14.6	15.0	15.4	L	2.3	2.6	2.9
F	8.4	8.8	9.2	M	0.26	0.46	0.66
G	0.73	0.83	0.93	N		7°	

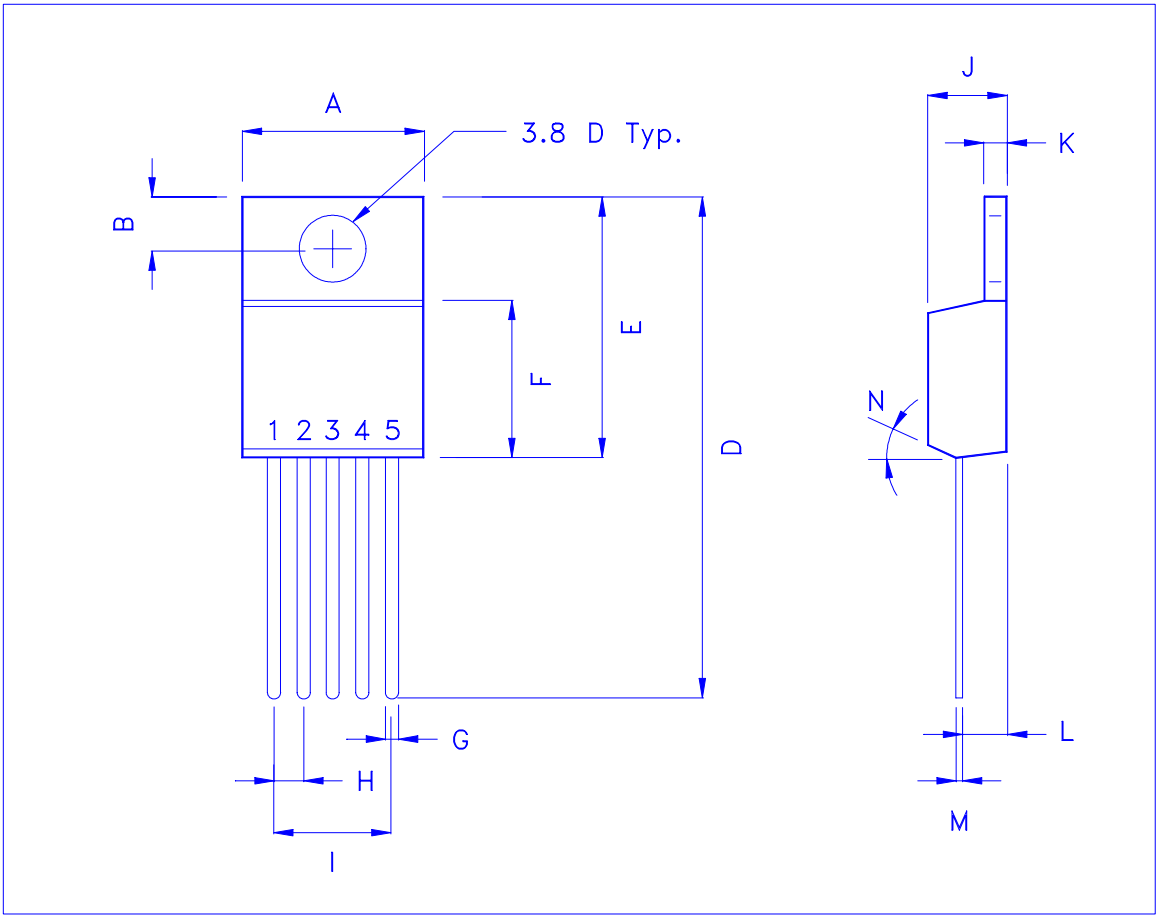

TO-263 (D^2PAK, 5-Lead) MECHANICAL DATA
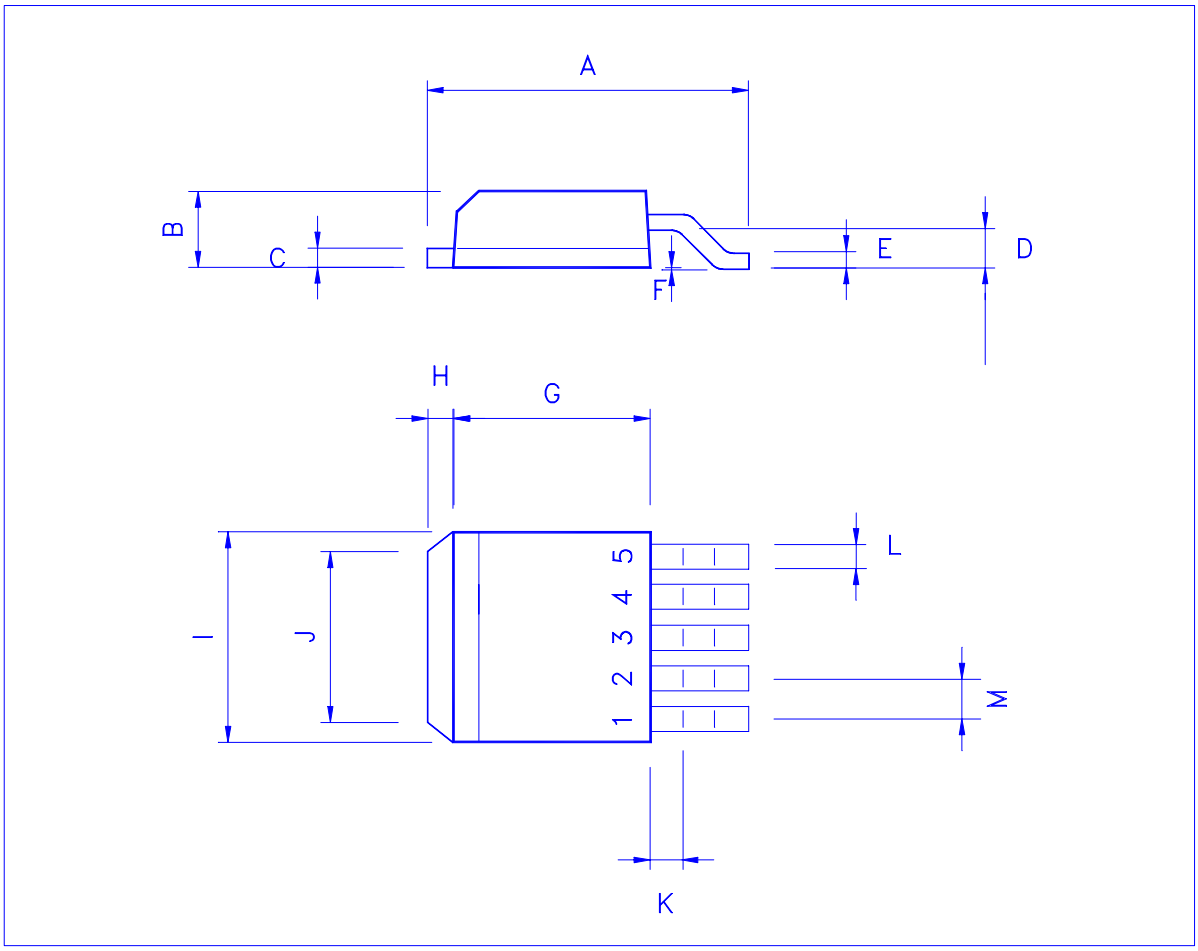
Dimension	mm			Dimension	mm		
	Min.	Typ.	Max.		Min.	Typ.	Max.
A	14.5	15	15.8	H	1.0	1.5	1.8
B	4.2		4.7	I	9.8		10.3
C	1.20		1.35	J		6.5	
D		2.8		K		1.5	
E	0.3	0.4	0.5	L	0.7	0.85	1.0
F	-0.102		0.203	M	1.57	1.7	1.83
G	8.5	9	9.5	N