LOW VOLTAGE VIDEO AMPLIFIER WITH LPF

■GENERAL DESCRIPTION

The NJM2575 is a Low Voltage Video Amplifier contained LPF circuit, 75Ω driver to connect TV monitor directly.

The mute circuit with power save function is suitable for low power design. The NJM2575 is suitable for down

■PACKAGE OUTLINE

NJM2575F1

■FEATURES

- ●Operating Voltage 2.8 to 5.5V
- ●Input Composite Video Signal 1.0Vpp
- ●Internal Low Pass Filter
- ●Operating Current 7.0mA typ. at Vcc=3.0V
- ●Operating Current Power Save Mode 60uA typ.at Vcc=3.0V
- ●Bipolar Technology
- ●Package Outline MTP6

■BLOCK DIAGRAM

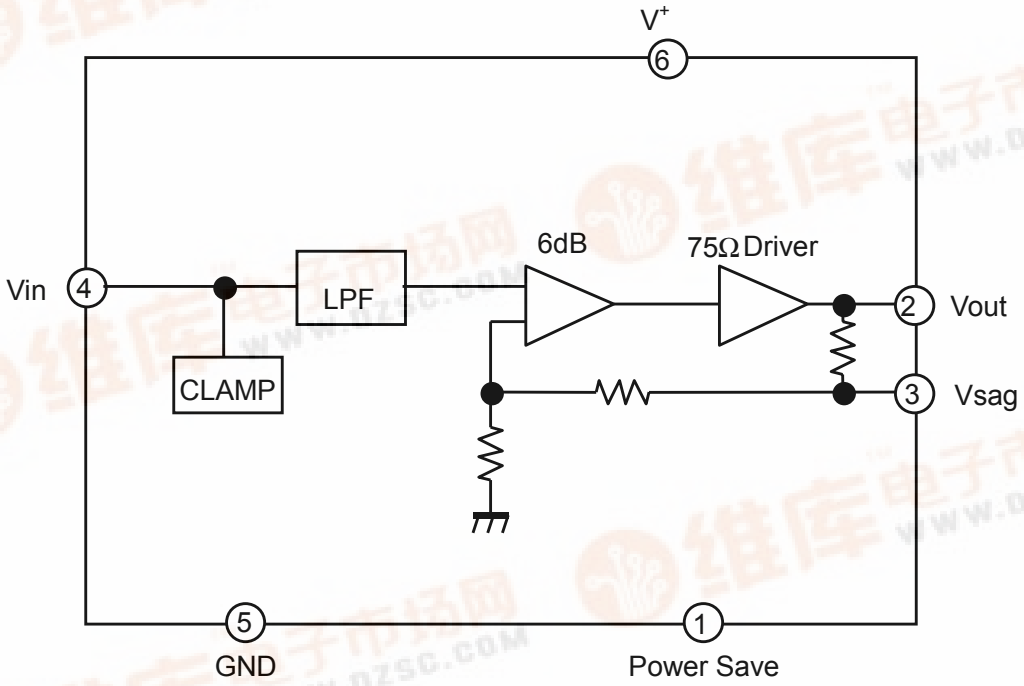

■ABSOLUTE MAXIMUM RATINGS

(Ta=25°C)

PARAMETER	SYMBOL	RATINGS	UNIT
Supply Voltage	V^+	7.0	V
Power Dissipation	P_D	200	mW
Operating Temperature Range	Topr	-40 to +85	°C
Storage Temperature Range	Tstg	-40 to +125	°C

■ELECTRICAL CHARACTERISTICS (V^+=3.0V,R_L=150Ω,Ta=25°C)

PARAMETER	SYMBOL	TEST CONDITION	MIN.	TYP.	MAX.	UNIT
Operating Voltage	Vopr		2.8	3.0	5.5	V
Operating Current	I_{CC}	No Signal	-	7.0	10.0	mA
Operating Current at Power Save	Isave	Power Save Mode	-	60	90	uA
Maximum Output Voltage Swing	Vom	f=1kHz,THD=1%	2.2	2.4	-	Vp-p
Voltage Gain	Gv	Vin=100kHz,1.0Vp-p, Input Sine Signal	6.1	6.5	6.9	dB
Low Pass Filter Characteristic	Gfy4.5M	Vin=4.5MHz/100kHz,1.0Vp-p	-0.5	0.0	+0.5	dB
	Gfy8M	Vin=8MHz/100kHz,1.0Vp-p	-	-2.0	-	
	Gfy16M	Vin=16MHz/100kHz,1.0Vp-p	-	-12.0	-	
Differential Gain	DG	Vin=1.0Vp-p, Input 10step Video Signal	-	0.2	-	%
Differential Phase	DP	Vin=1.0Vp-p, Input 10step Video Signal	-	0.2	-	deg
S/N Ratio	SNv	Vin=1.0Vp-p, 100% White Video Signal, R_L=75Ω	-	+60	-	dB
2nd. Distortion	Hv	Vin=1.0Vp-p,3.58MHz, Sine Video Signal, R_L=75Ω	-	-40	-	dB
SW Change Voltage High Level	VthPH	active	1.8	-	V^+	V
SW Change Voltage Low Level	VthPL	non-active	0	-	0.3	

■CONTROL TERMINAL

PARAMETER	STATUS	NOTE
Power Save	H	Power Save : OFF
	L	Power Save : ON
	OPEN	Power Save : ON

■TEST CIRCUIT

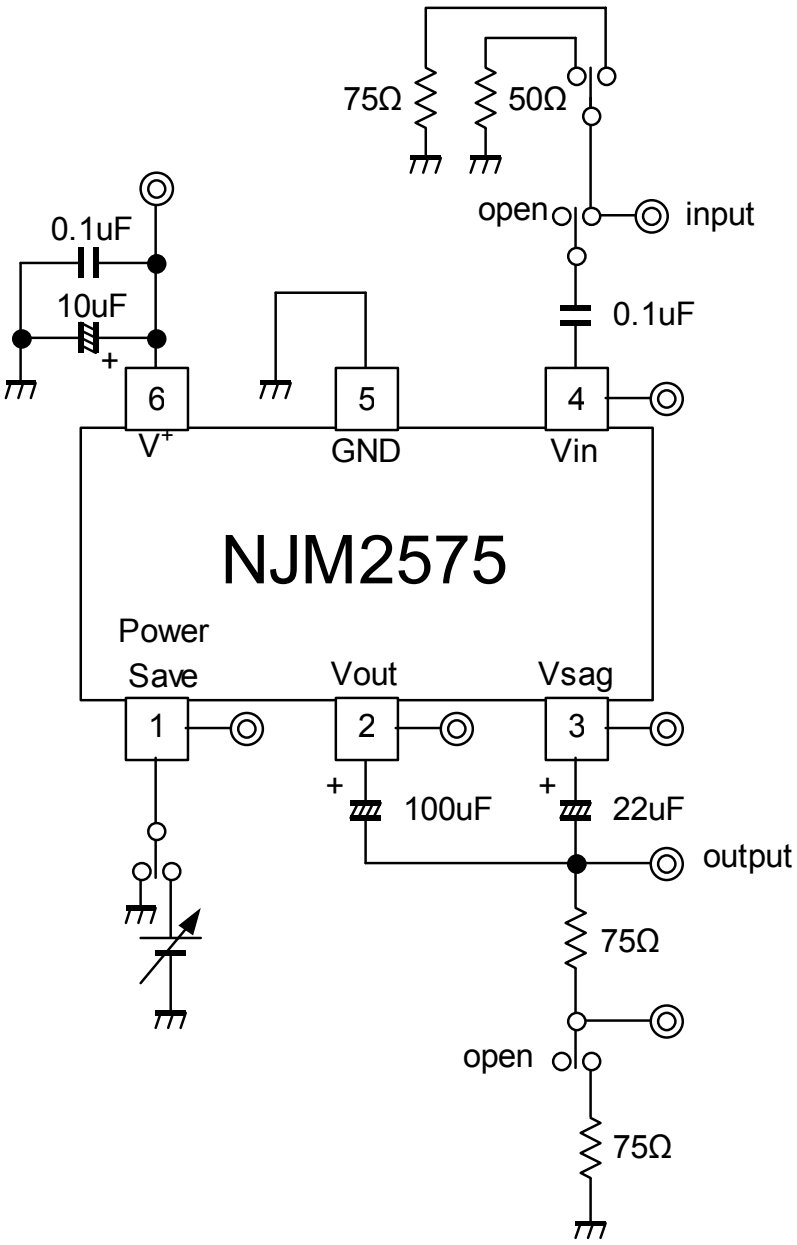

■APPLICATION CIRCUIT

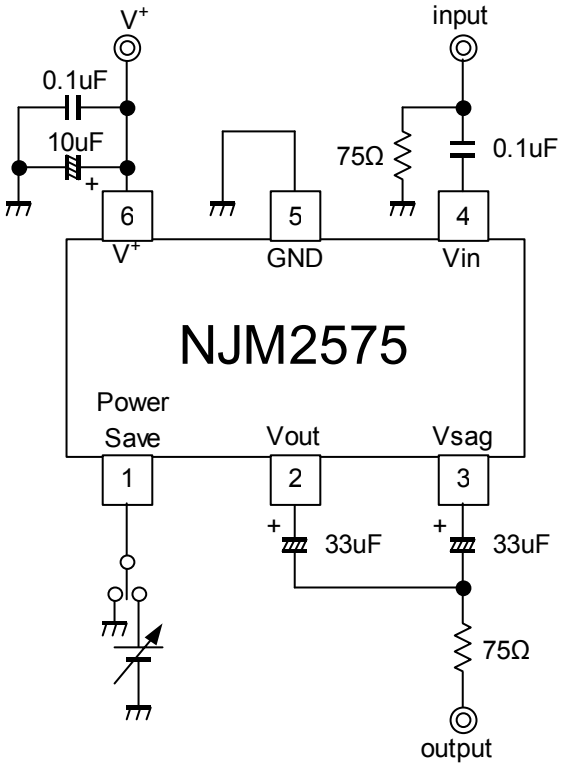

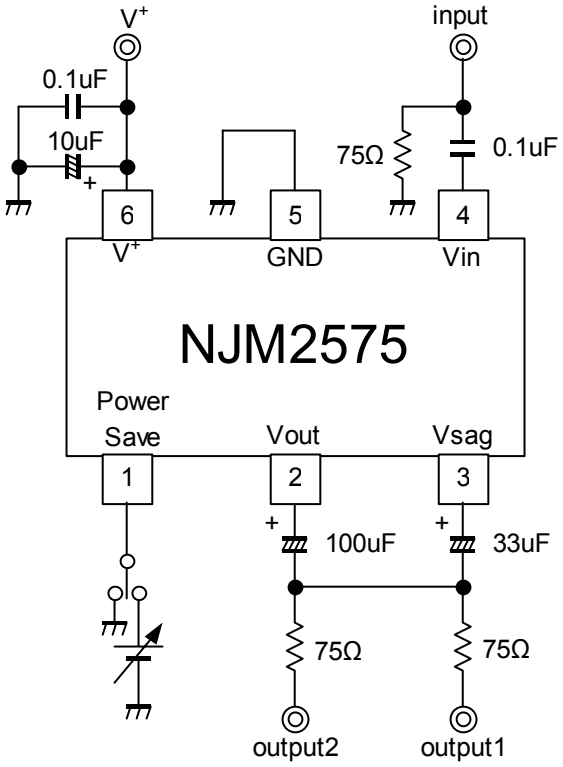

75Ω 2System Drive

■TERMINAL FUNCTION

PIN No.	PIN NAME	DC VOLTAGE	EQUIVALENT CIRCUIT
1	Power save	-	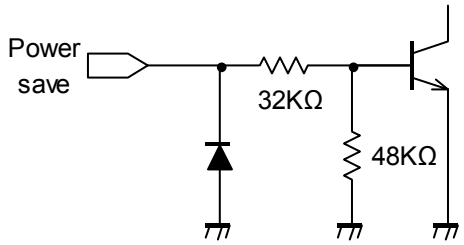
2	Vout	0.26V	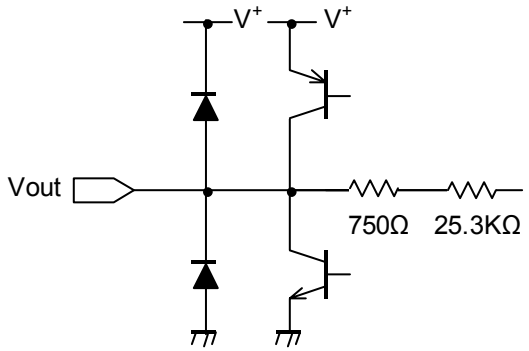
3	Vsag	-	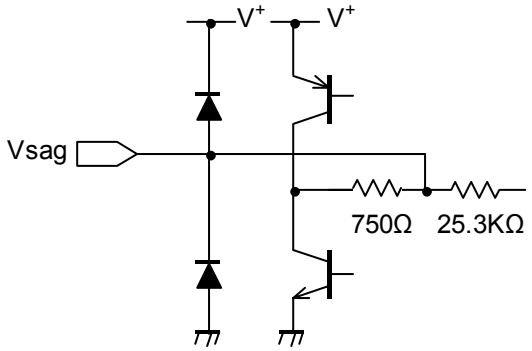
4	Vin	1.10V	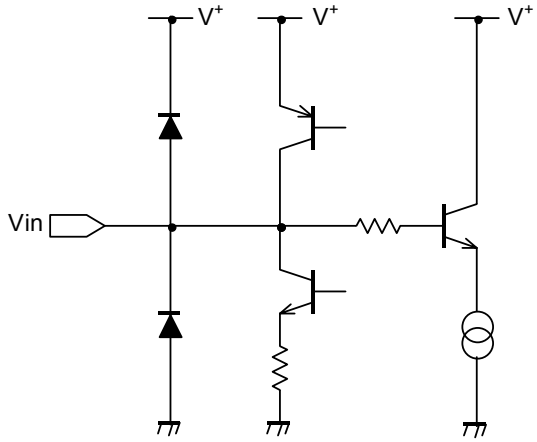
5	GND	-	
6	V^+	3V	

■TYPICAL CHARACTERISTICS

Frequency Characteristic

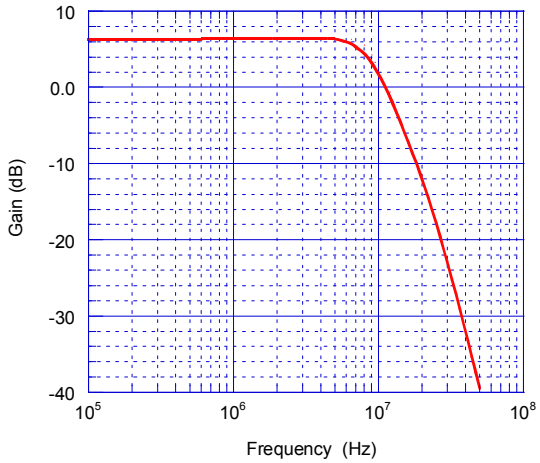

Operating Current vs. Supply Voltage

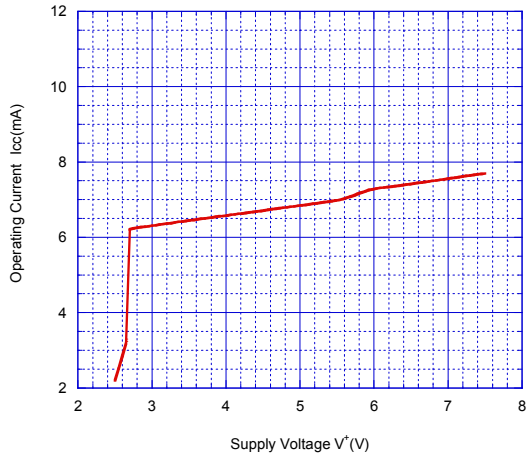

Operating Current at Standby State vs. Supply Voltage

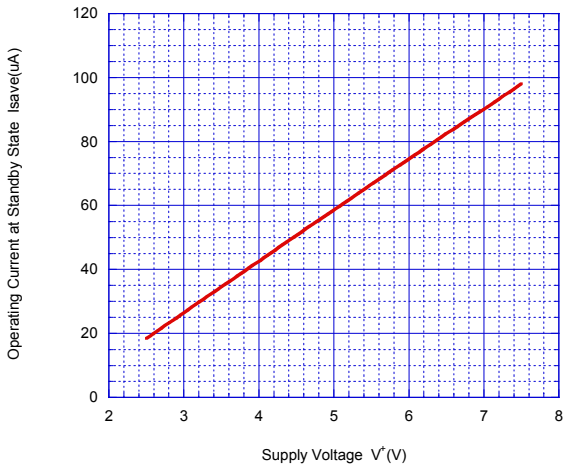

Maximum Output Voltage Swing vs. Supply Voltage

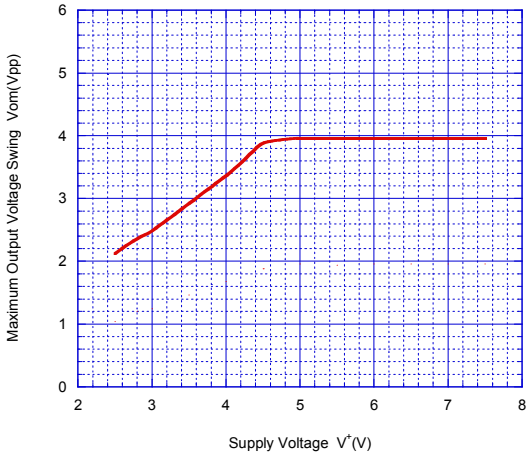

Voltage Gain vs. Supply Voltage

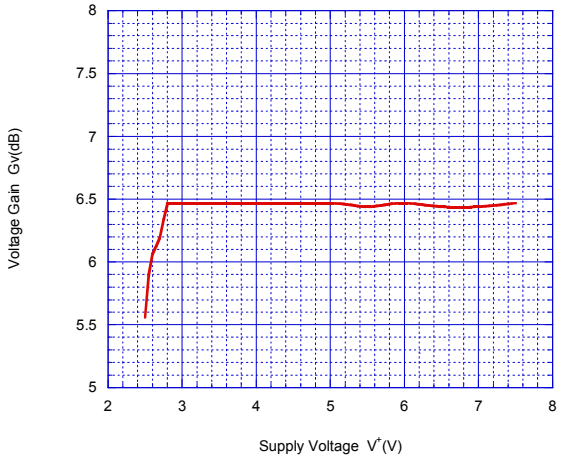

■TYPICAL CHARACTERISTICS

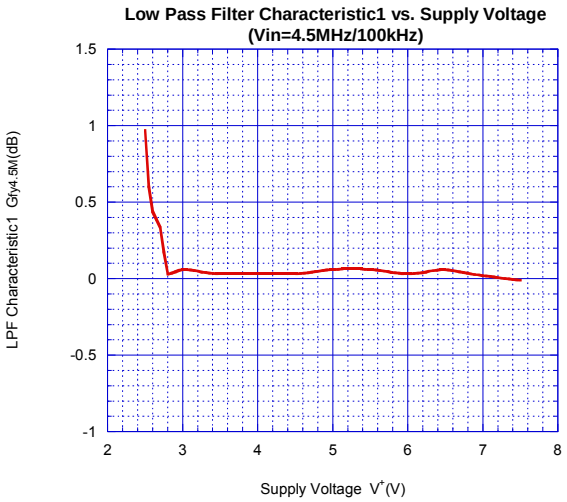

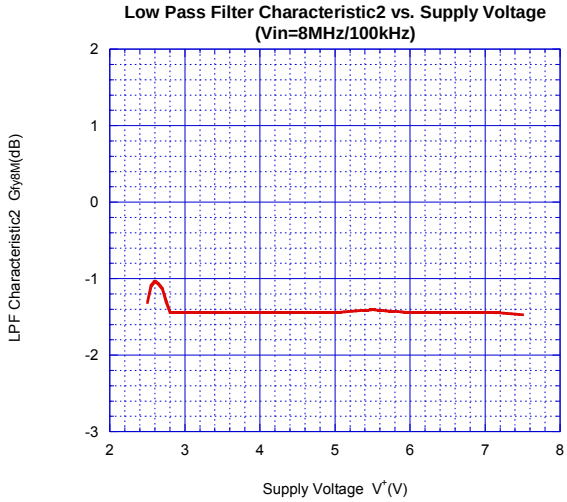

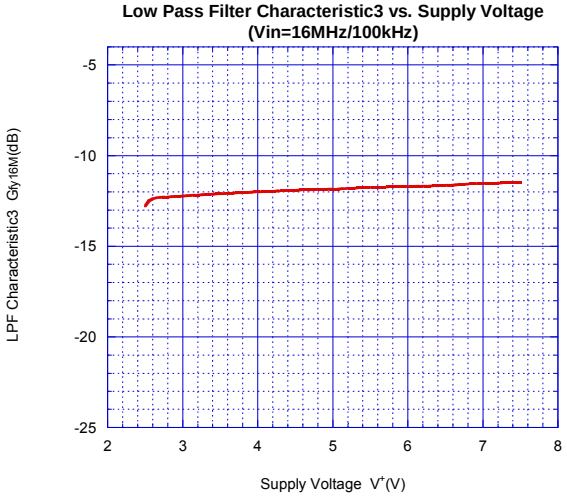

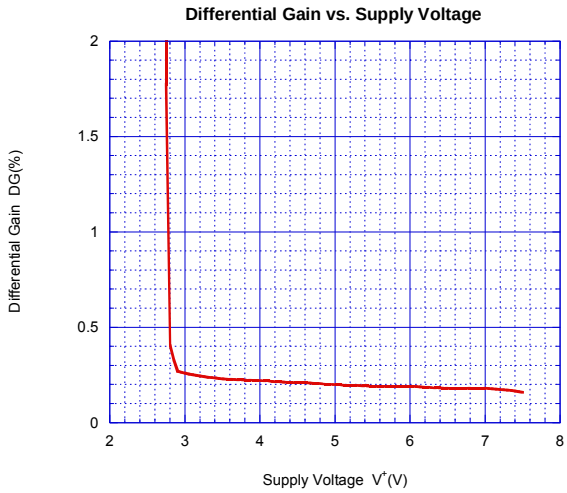

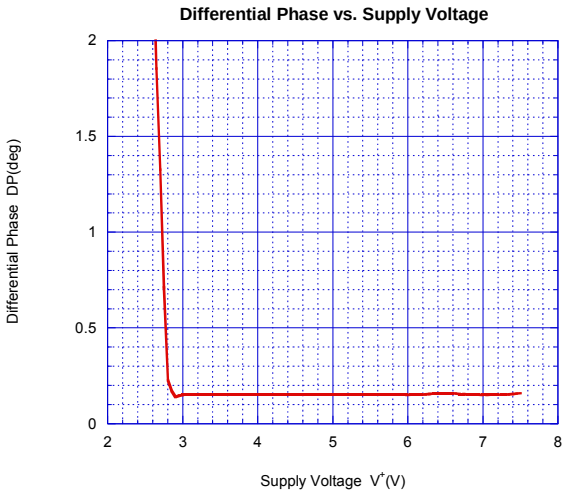

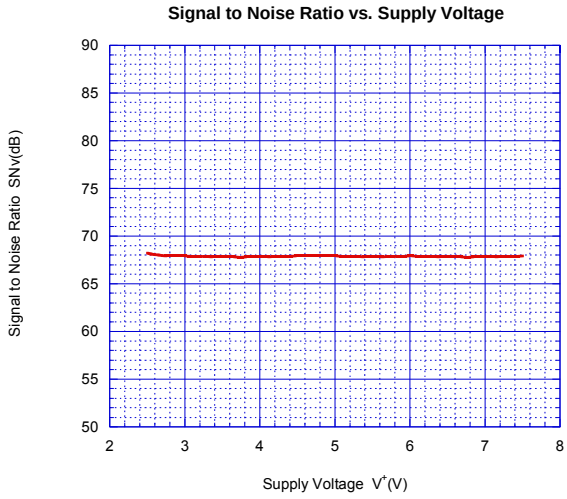

■TYPICAL CHARACTERISTICS

Second Harmonic Distortion vs. Supply Voltage

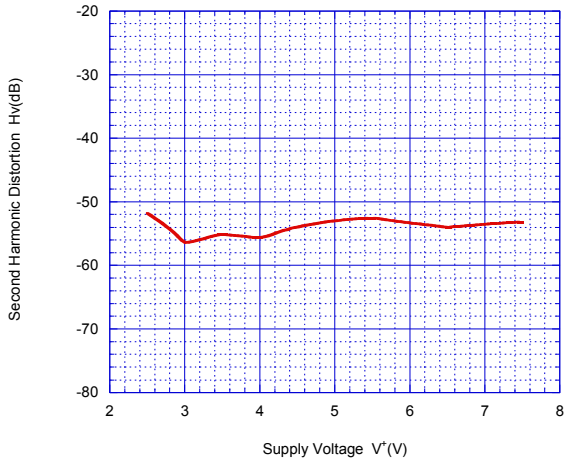

Switching Voltage vs. Supply Voltage

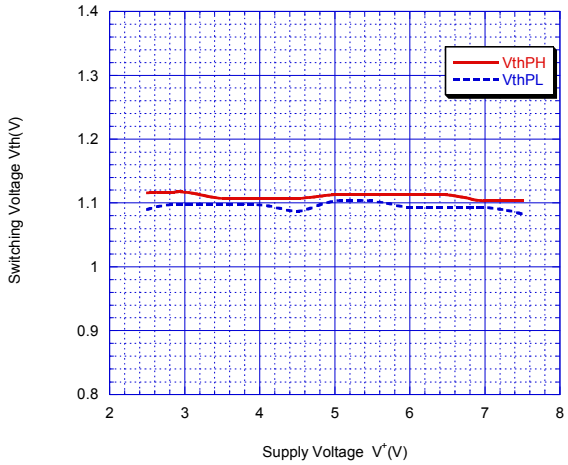

Operating Current vs. Temperature

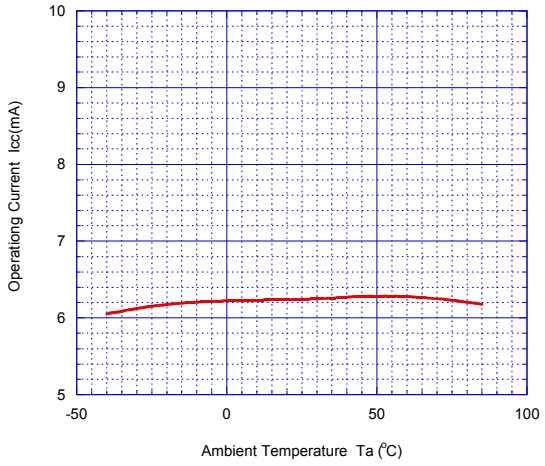

Operating Current at Standby State vs. Temperature

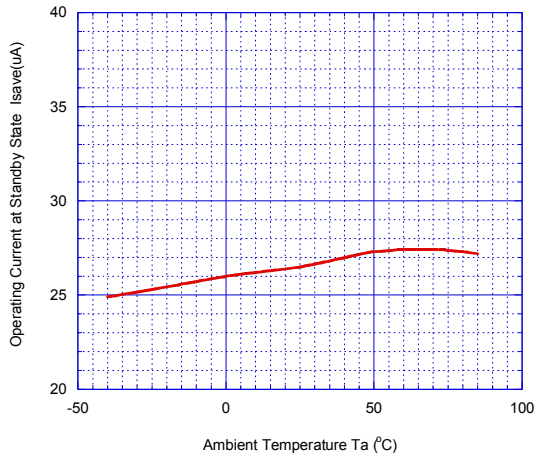

Maximum Output Voltage Swing vs. Temperature

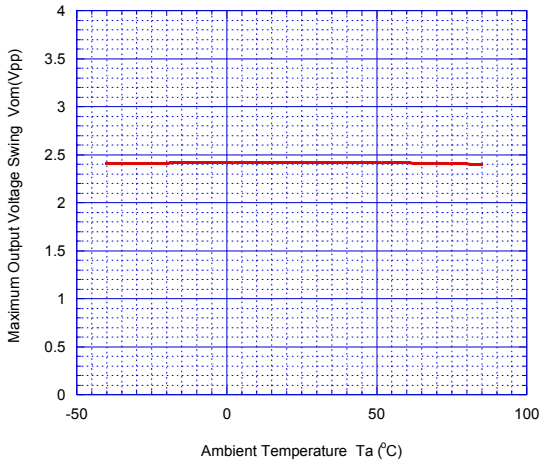

Voltage Gain vs. Temperature

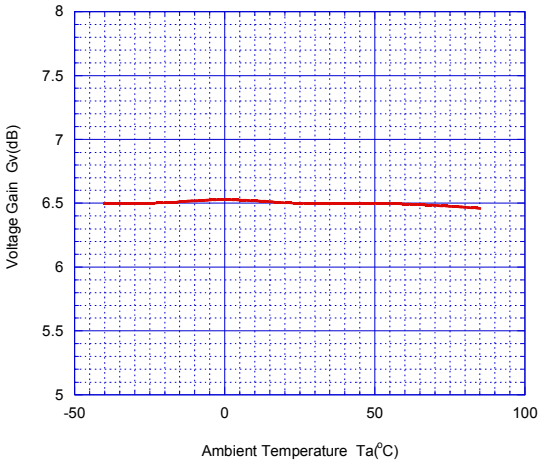

■TYPICAL CHARACTERISTICS

Low Pass Filter Characteristic 1 vs. Temperature (Vin=4.5MHz/100kHz)

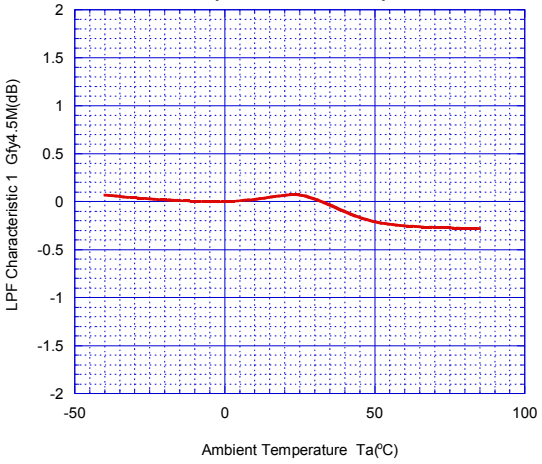

Low Pass Filter Characteristic 2 vs. Temperature (Vin=8MHz/100kHz)

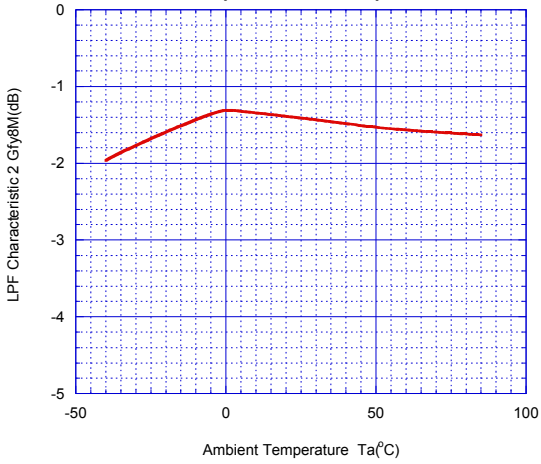

Low Pass Filter Characteristic 3 vs. Temperature (Vin=16MHz/100kHz)

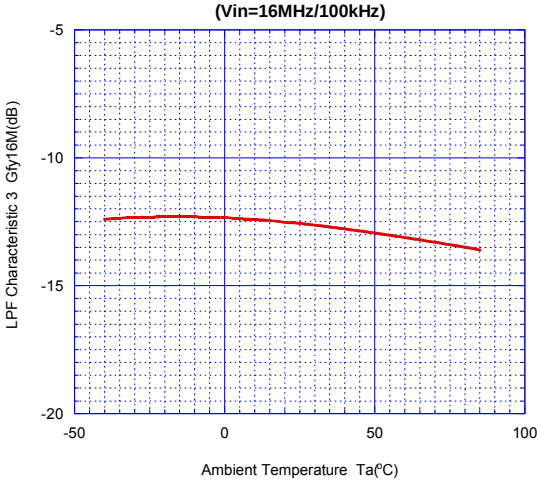

Differential Gain vs. Temperature

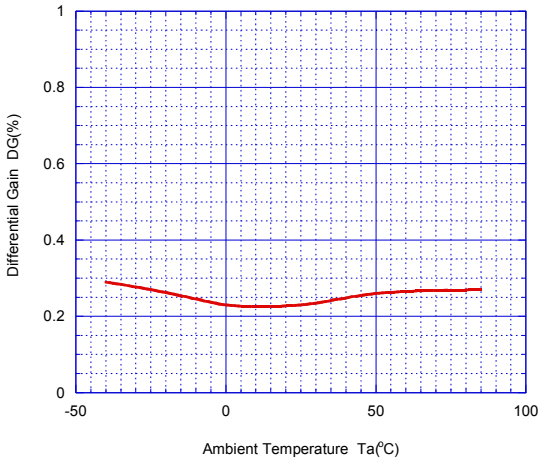

Differential Phase vs. Temperature

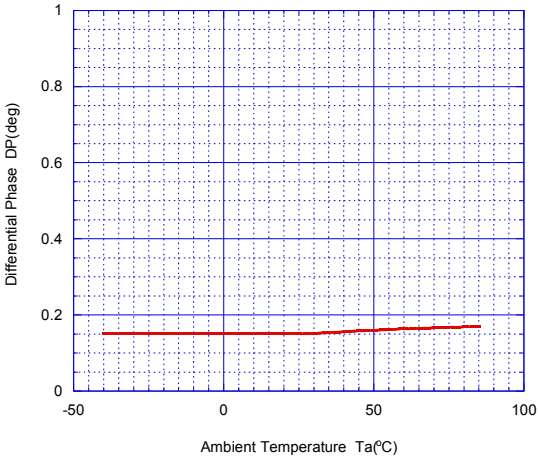

Signal to Noise Ratio vs. Temperature

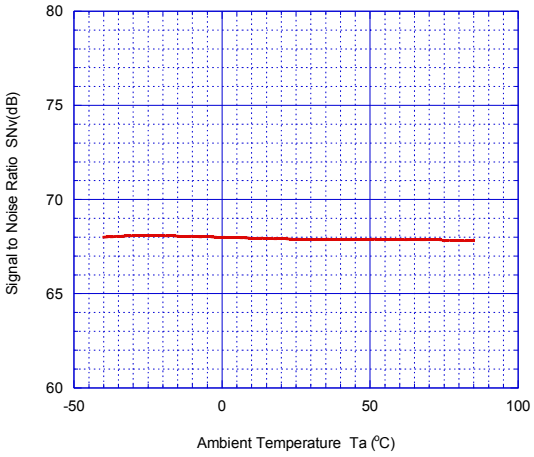

■TYPICAL CHARACTERISTICS

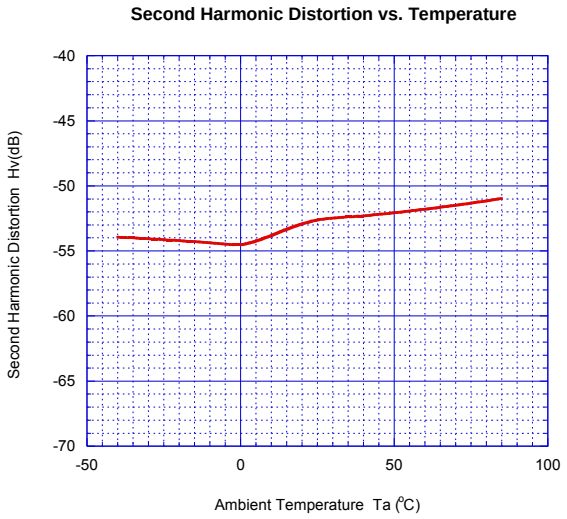

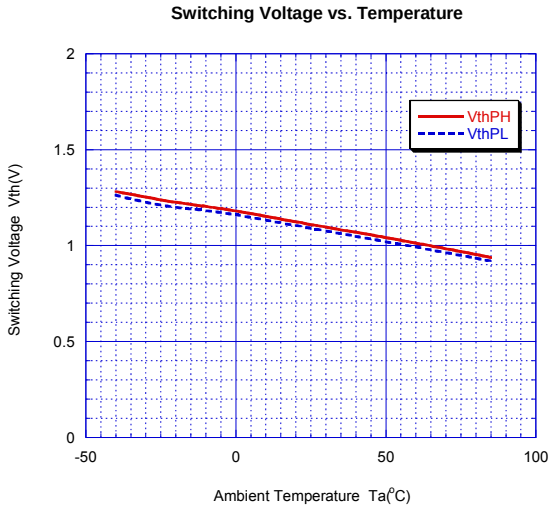

■ APPLICATION

When you use a power save terminal more than by 4.0V, please put resistance of about 20kΩ into a power save terminal.

I n addition, power save terminal voltage (VthH) -- in the case of below 4.0V, resistance is not required

Example)

● PS(VthH) ≥ 4.0V

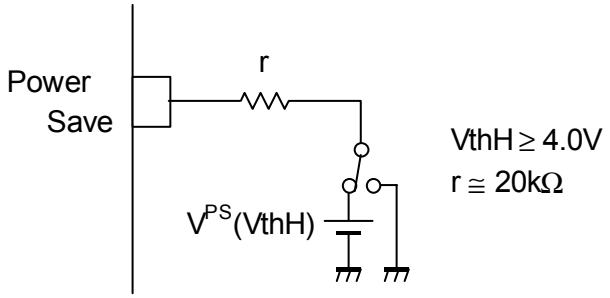

● PS(VthH) < 4.0V