查询VT16051C供应商 捷多邦，专业PCB打样工厂，24小时加急出货

372-0858

# HIGHLY MICRO SWITCHES

## SERIES VT

- MICRO SWITCHES
- 16 Amps

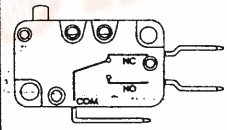

Single Pole

## AGENCY APPROVALS

## MATERIALS

**Housing:** PBT
**Contacts:** $AgSnO_2$
**Terminal:** COPPER
**Spring:** SWPB

## SPECIFICATIONS

**Contact Resistance:** 15mΩ max.(initial)
**Insulations Resistance:** 100mΩ min.
(at 500VDC)
**Electric Life:** 100,000 operations min.
(full load)
**Mechanical life:** 10,000,000 operations min.

## TEST SPECIFICATIONS

**Dielectric strength:** Between terminals of same polarity AC1000V (50/60Hz 1 min) Between each terminal and non-current-carrying rind parts AC2000V (50/60Hz 1 min)
**Ambient temperature:** -20~+85℃

## HOW TO ORDER

V T

**Series**

**Rating**

16: 15A;125/250VAC (UL 1054)
16(4)A;125/250VAC (IEC 1058-1)

**Contact**

1: 1NC & 1NO
2: 1NC
3: 1NO

**Terminal**

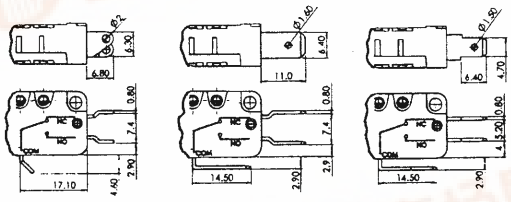

A: solder terminal
C: 6.4x0.8 quick-connect terminal
C2: 4.8x0.8 quick-connect terminal

**Actuator Type**

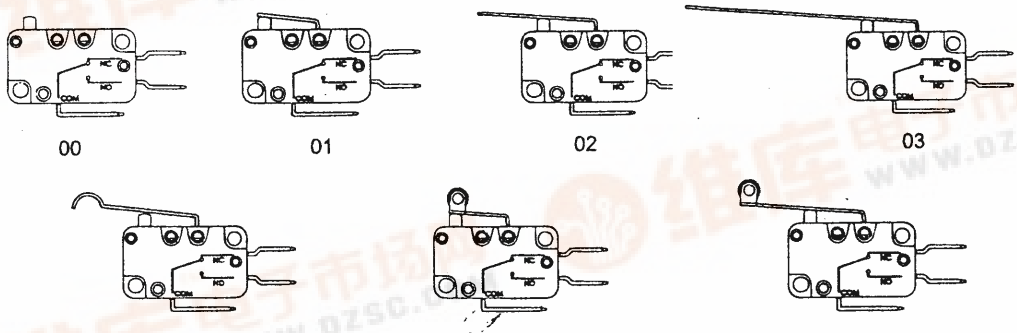

00 01 02 03 04 05 06

找PDF 维库一下 pdf.dzsc.com

# HIGHLY MICRO SWITCHES

## VT □□ 041C

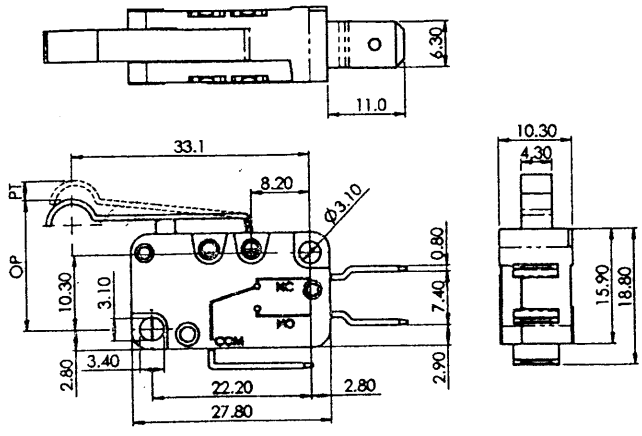


| | |
|---|---|
| Operating Force (OF) Max: | 150g |
| Pretravel (PT) Max: | 3.0mm |
| Overtravel (OT) Min: | 1.6mm |
| Movement Differential (MD) Max: | 1.0mm |
| Operating position (OP): | 20.4± 1.2mm |

## VT □□ 051C

372 0858

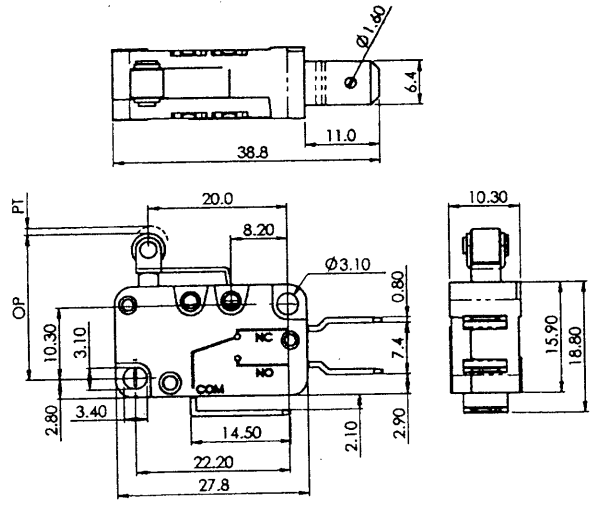


| | |
|---|---|
| Operating Force (OF) Max: | 250g |
| Pretravel (PT) Max: | 1.2mm |
| Overtravel (OT) Min: | 1.0mm |
| Movement Differential (MD) Max: | 0.4mm |
| Operating position (OP): | 20.8± 0.6mm |

## VT □□ 061C

372 0846

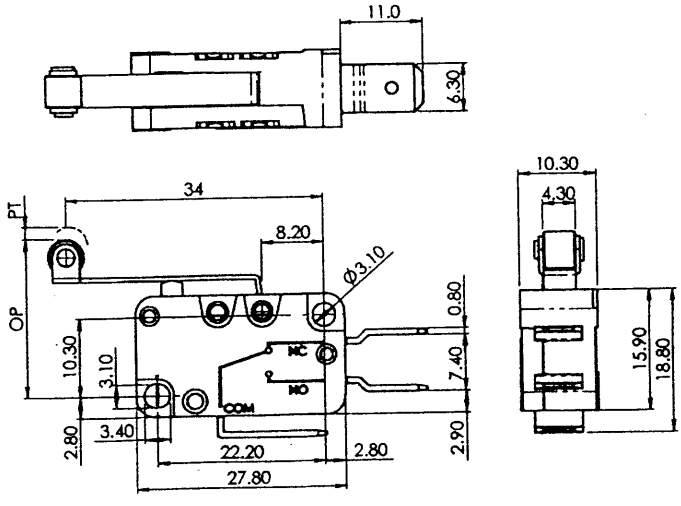


| | |
|---|---|
| Operating Force (OF) Max: | 120g |
| Pretravel (PT) Max: | 3.5mm |
| Overtravel (OT) Min: | 1.7mm |
| Movement Differential (MD) Max: | 1.0mm |
| Operating position (OP): | 20.8± 1.2mm |