查询UM91260D供应商 捷多邦，专业PCB打样工厂，24小时加急出货

UMC

UM91260 Series

ADVANCED PRODUCT DESCRIPTION

10 Memory Tone/Pulse Dialer

Features

- 32-digit redial memory
- 10 number by 16-digit repertory memory
- Tone/pulse switchable via slide switch and inserts a pause (4.08 sec.) automatically
- Low operating voltage: 1.8V to 5.0V
- Uses 480 KHz ceramic resonator
- Low standby voltage and current: 1.0V; 0.1μA, 40°C
- Low off-hook standby current and operating current
- Make/Break ratio pin selectable (1/2, 2/3)
- Dialing rate pin selectable 10 pps/20 pps (UM91261 only)
- Two keys single tone operation
- Redial memory cascadable with normal dialing
- Fully debounced 4 x 4 keyboard
- Power-on reset on chip
- Minimum tone output duration of 106.5 ms and minimum inter digit interval of 106.5 ms at normal dialing
- All pins protected against electrostatic charges and latch-up
- 22-pin and 18-pin versions
- On/off hook store

Part no.	Dialing rate	Storage mode
UM91260A	10 pps	Off-hook only
UM91260B	20 pps	On/off hook
UM91260C	10 pps	On/off hook
UM91260D	20 pps	Off hook only

General Description

The UM91260 series is a 10-number by 16-digit tone/pulse switchable repertory dialer with a 32-digit redial memory. Through pin selection, switching from pulse to tone mode can be done by using slide switch. The dialing rate & storage mode of the UM91260 is selectable by version. The UM91261 is a 22-pin version with keytone output & dialing rate, with a storage mode that can be selected by pin selection.

Pin Configuration

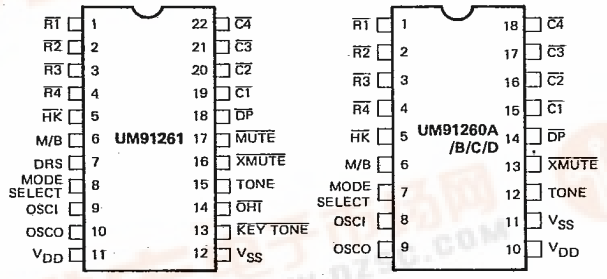

Keyboard Assignment

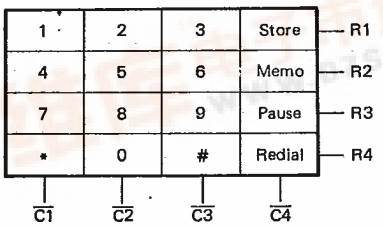

找PDF 维库一下 pdf.dzsc.com

Absolute Maximum Ratings*

Power Supply Voltage ($V_{DD} - V_{SS}$) . . . −0.3V to +6.0V

Operating Temperature (Top) . . . . . −20°C to +70°C

Storage Temperature (Tstg) . . . . . −55°C to +150°C

*Comments

Stresses above those listed under "Absolute Maximum Ratings" may cause permanent damage to the device. This is a stress rating only and functional operation of the device at these or any other conditions above those indicated in the operational sections of this specification is not implied.

Electrical Characteristics

($V_{DD} - V_{SS}$ = 3.5V, Fosc = 480 KHz, Top = 25°C, unless otherwise specified.)

Parameter	Symbol	Min.	Typ.	Max.	Units	Conditions
Operating Voltage	V_{DD}	1.8		5.0	V	
Memory Retention Voltage	Vr	1.0			V	
Supply Operating Current	I_{DDp}			0.5	mA	Oscillator running all outputs unloaded.
	I_{DDt}			1.0	mA	
Standby Current	I_{DD1}			0.05	μA	$\overline{HOOK}$ = V_{DD} = 1.0V all outputs unloaded.
	I_{DD2}			50	μA	$\overline{HOOK}$ = V_{SS}, all outputs unloaded.
Output Sink Current: $\overline{DP}$ $\overline{MUTE}$ $\overline{XMUTE}$ KEY-IN TONE	I_{OL1}	1.0			mA	V_{OL} = 0.4V.
	I_{OL2}	0.4			mA	V_{OL} = 0.4V, V_{DD} = 2.0V.
Single Column Tone Output Amplitude	V_{PP1}		945		mV	Rload = 47 Kohm.
	V_{PP2}		540		mV	Rload = 47 Kohm, V_{DD} = 2.0V.
Valley of Single Column/ Row Tone Output	Vvalley		0.48 V_{DD}			Rload = 47 Kohm.
Single Row Tone Output Amplitude	V_{PP1}		770		mV	Rload = 47 Kohm.
	V_{PP2}		440		mV	Rload = 47 Kohm, V_{DD} = 2.0V
Distortion	% DIS			5		
Oscillator Start up Time	Tstart		10		mS	V_{DD} = 2.0V, Fosc = 480 KHz, connected as typical application circuit.

Key Definition

1, 2, 3, 4, 5, 6, 7, 8, 9, 0 Keys

These are either the dialing signal keys for both the PULSE mode and TONE mode operation or the memory location which is to be RECALLED or STORED, according to the operation sequence.

*, # Keys

These are the dialing signal keys for TONE mode only. The * key is equivalent to PAUSE key; the # key is equivalent to REDIAL key in the PULSE mode.

(Note: In the TONE mode when NORMAL dialing, pressing two or more DIGIT keys (0 to 9, *, #) in the same column (or row) simultaneously

will activate the SINGLE TONE output of that column (or row). Multiple columns and/or rows which have been activated will not have any tone output.)

PAUSE Key

A PAUSE key input is stored as a digit, and it will pause the output for 4.0 seconds when this digit is being execued.

REDIAL Key

The REDIAL key is valid only when it is pressed as the 1st key after OFF-HOOK operation. This key provides REDIAL function conveniently.

STORE Key

If the STORE operation is allowed when the DIALER is set to the corresponding condition, pressing the STORE key will change the DIALER into the STORE mode. The STORE mode is released after the memory transfer operation is executed. This is a MASTER control key. The dialing sequence will be interrupted when this key is activated.

RECALL/LOCATION Key

This key is operated either to RECALL one of the memory locations or to store a telephone number into a memory LOCATION according to the operation sequence.

Keyboard and T/P Operation Manual

SYMBOL DEFINITION

Dp

PULSE Data; 1, 2, 3, 4, 5, 6, 7, 8, 9, 0.

Dt

TONE Data; Dp, *, #.

Dm

Memory Location; 1, 2, 3, 4, 5, 6, 7, 8, 9, 0.

ST

STORE KEY.

R/1

RECALL/LOCATION key for RECALL.

r/L

RECALL/LOCATION key for LOCATION.

RD

REDIAL KEY.

t/P

T/P input HIGH.

T/p

T/P input LOW.

zizizi

CONVERSATION mode.

RECOMMENDED DIALING, STORAGE OPERATION

Normal Dialing in Pulse Mode

OFF HOOK, t/P; Dp, ... , Dp; zizizi; ON HOOK

Normal Dialing in Tone Mode

OFF HOOK, T/p; Dt, ... , Dt; zizizi; ON HOOK

Normal Dialing in Pulse-to-Tone Mode

OFF HOOK, t/P; Dp, ... , Dp; T/p; Dt, ... , Dt; zizizi; ON HOOK

(Note: In the normal dialing mode, if the digits that are to be dialed are less than 32, the UM91260 series can dial out those digits exactly and unlimitedly.

Redialing

OFF HOOK; RD; zizizi; ON HOOK

(Note: This operation activates the UM91260 series to dial out the BUFFER memories.)

Repertory Dialing for one Memory

OFF HOOK, t/P; R/1, Dm; zizizi; ON HOOK

Repertory Dialing for Cascaded Memories

OFF HOOK; R/1, Dm; . . . . . ; R/1, Dm; zizizi; 0-0 ↓

(Warning: Do not enter more than 32 digits into the cascaded memories. Overflowing digits will be truncated and will not be dialed out.)

Repertory Dialing Cascaded with Normal Dialing

OFF HOOK; R/1, Dm; Dp/Dt, ... ; zizizi; ON HOOK

Storing a Telephone Number for Pulse Output

1. For UM91260A/D:
   OFF HOOK, t/P; ST; Dp, ... , Dp; r/L; Dm; ON HOOK (Return To Normal Mode)
2. For UM91260B/C:
   ON HOOK/OFF HOOK, t/P; ST; Dp, ... Dp; r/L; Dm; ON HOOK (Return To Normal Mode).

Storing a Telephone Number for Pulse-to-Tone Mixed Dialing

ON HOOK/OFF HOOK (BY CONDITION), t/P; ST; Dp, ... , Dp; T/p; Dt, ... , Dt; r/L; Dm; ON HOOK

Storing a Telephone Number for DTMF Output

ON HOOK/OFF HOOK (BY CONDITION), T/p; ST; Dt, ... , Dt; r/L; Dm; ON HOOK (Return to NORMAL mode)

(Note: The STORE key input will latch the DIALER in the STORE mode unless the r/L key and the Dm key are pressed one after the other.

Comparisions of Specified vs Actual Tone Frequencies Generated by UM91260 Series

Output Frequency (Hz)		% Error (See Note)
Specified	Actual	
697 (Row 1)	695.65	–0.19
770 (Row 2)	769.23	–0.10
852 (Row 3)	851.06	–0.11
941 (Row 4)	941.18	+0.02
1,209 (Column 1)	1,212.12	+0.26
1,336 (Column 2)	1,333.33	–0.20
1,477 (Column 3)	1,481.48	+0.30

Note: % error does not include oscillator drift.

TONE Generator

The UM91260 series is well designed with a 6-LEVEL, 12-SEGMENT, 1/2 V_{DD} REFERENCE VOLTAGE structure. The THD (total harmonic distortion) of the UM91260 TONE output is typically 1.0%, very low compared to the EIA RS-470 STANDARD.

The TEMPERATURE COEFFICIENT of the TONE OUTPUT AMPLITUDES is balanced to ZERO from the adaptive TONE GENERATOR structure.

The output strength of the COLUMN TONE is pre-emphasized 2 dB than the ROW TONE.

The typical equivalent output impedance of this TONE GENERATOR is 1.5 Kohm.

Pin/Function Description

HOOK Input ($\overline{HK}$)

The UM91260 series governs ON-HOOK/OFF-HOOK conditions according to whether the HOOK INPUT is connected to V_{DD} or V_{SS}. This is the MASTER CONTROL of UM91260 series.

Keyboard (C1, C2, C3, C4, R1, R2, R3, R4)

Connecting a row and a column together will activate a key operation. When the ON HOOK STORE pin is inhibited, both the row and column are at high impedance in ON HOOK state. When the ON HOOK STORE pin is available, the column input is pulled low and the row input is pulled high. Scanning signals are presented on both the row and column pins under a valid key-in condition. The key-in debounce time is typically 20 mS.

Oscillator (OSCI, OSCO)

The UM91260 series contains an oscillator circuit to generate the system time-base. One 480 KHz ceramic resonator, two 100pF serial loading capacitors and a 470 Kohm feedback resistor form a complete oscillator circuit. The oscillator circuit is activated when the HOOK pin is low.

TONE/PULSE Input (MODE SELECT)

The UM91260 series is operated in the TONE/PULSE mode corresponding to this input which is connected to V_{SS}/V_{DD} respectively.
During PULSE mode dialing sequence, switching this pin from V_{DD} to V_{SS}, the DIALER will automatically insert a TONE with PAUSE code into the BUFFER memories, then change the following entrance of digits to the TONE mode.
Once the DIALER is operating in the TONE mode, the T/P input which changes from V_{SS} to V_{DD} can not switch the DIALER back to PULSE mode except via ON-HOOK operation.
Following the OFF-HOOK operation, pressing the 1st digit will result in two codes being written into the BUFFER memories during TONE mode. The 1st is the TONE code and the 2nd is DIGIT code.
Before pressing the next key, toggling the T/P SWITCH back and forth will not change the state of the DIALER. This input is checked whenever a DIGIT key is pressed.
(Warning: The TONE mode is stored as a digit in the BUFFER memory. In the TONE only application, for example, the UM91260 series is effectively a 31-DIGIT REDIAL BUFFER MEMORY AND 10 NUMBER BY 15 DIGITS REPERTORY MEMORY TONE DIALER.)

Dial PULSE Output ($\overline{DP}$)

This pin is an N-channel open drain output. The output is low in the dial pulse "BREAK" operation during OFF-HOOK PULSE mode. Otherwise, this output is "OPEN". The UM91260 series provides the IDP (Inter-Digit Pause) for 808 ms in 10 PPS and 404 ms in 20 PPS dial pulse rate.

TONE Out (TONE)

In the TONE mode operation, this pin provides a TONE output to drive the external amplifier circuit. It is forced to V_{SS} in non-output condition. The UM91260 series is well-designed minimum TONE and IDP duration: 96 ms is built-in. The equivalent OUTPUT IMPEDANCE is 1.5 Kohm typically.

ON HOOK STORE Inhibit ($\overline{OHI}$)

The ON HOOK STORE function is available when this input is high, and is inhibited when this input is low.

Rmute Output ($\overline{MUTE}$)

This is an N-channel open drain output. The output transistor is switched on during PULSE dialing sequences. Otherwise, it is switched off. (UM91261 only)

XMUTE Output ($\overline{XMUTE}$)

This is an N-channel open drain output. The output transistor is switched on during dialing sequences (both PULSE and TONE modes). Otherwise, it is switched off.

MAKE-BREAK Ratio Select (M/B)

This input selects the MAKE-BREAK ratios:

Input Level	Make-Break Ratio
V_{DD}	1 : 2
V_{SS}	2 : 3

Dialing Rate Select (DRS)

This input selects the DIALING RATE: (UM91261 only)

Input Level	Dialing Rate
V_{DD}	20 PPS
V_{SS}	10 PPS

Key-In Tone ($\overline{KEY\ TONE}$)

This is a CMOS inverter device output. This output is valid in PULSE & TONE modes. Output frequency 1.5 KHz and duration for 42.6 ms after a valid key-in. (UM91261 only)

Power Input (V_{DD}, V_{SS})

These are the power input pins for UM91260 series.

Timing Diagram

NORMAL PULSE TO TONE MIXED DIALING

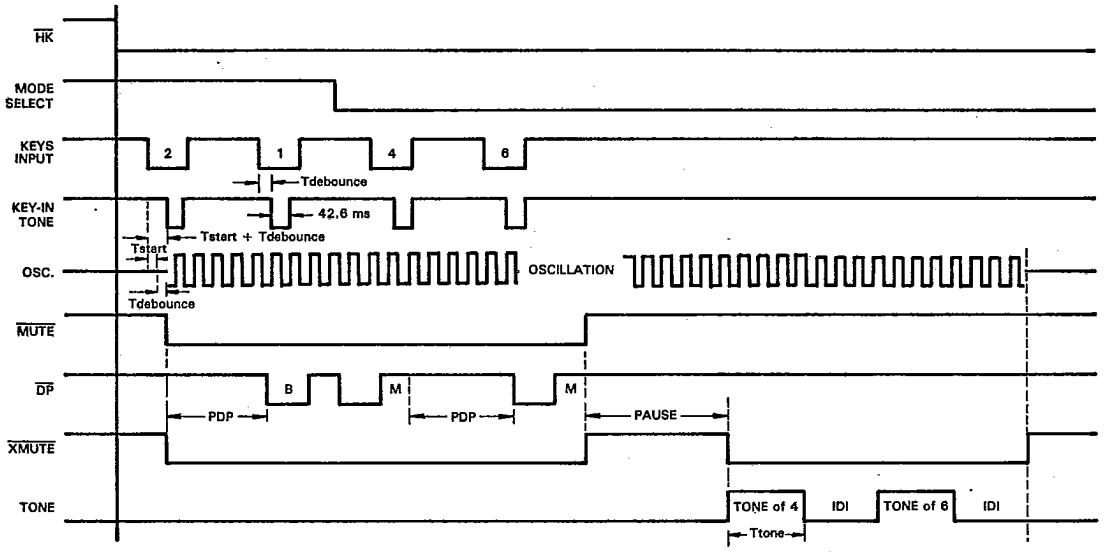

After the above keys are entered, the REDIAL BUFFER MEMORY has used 5 digits to store 5 codes as follows:

Redial Buffer Digit	1	2	3	4	5
Code	2	1	TONE	4	6
Signal Form	pulse	pulse	change to tone, and pause for 4.08 seconds	TONE	TONE

After the above keys are entered, the REDIAL BUFFER MEMORY has used 4 digits to store 4 codes as follows:

Redial Buffer Digit	1	2	3	4
Code	TONE	1	1	7
Signal	change to tone	TONE	TONE	TONE

Notes: 1. The N-channel open drain output pins should be pulled high.
2. The output of $\overline{DP}$, $\overline{RMUTE}$ and $\overline{KEY\text{-}IN\ TONE}$ pins are high (opened).
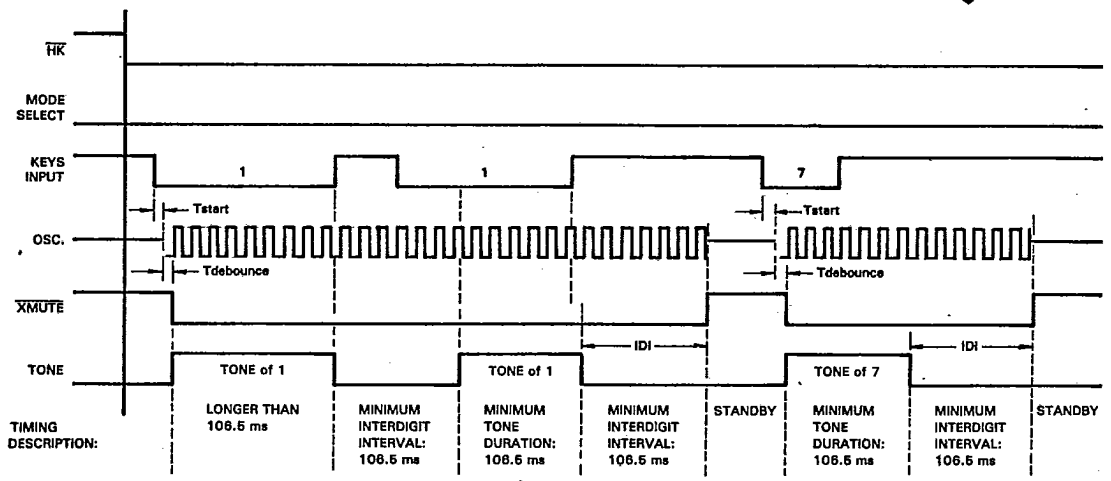
NORMAL PURE TONE DIALING