529-734

PYF08AE

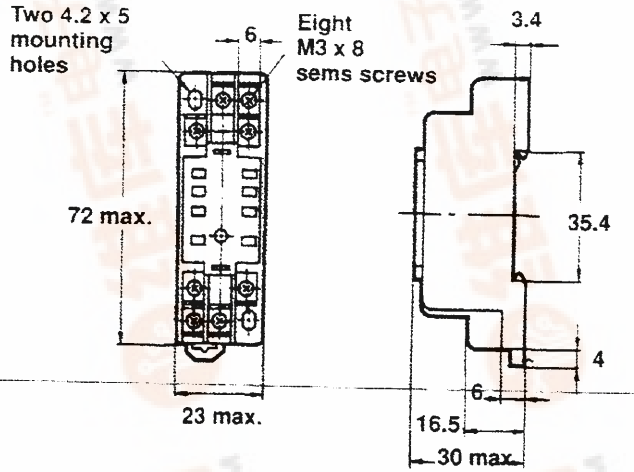

Terminal arrangement
(top view)

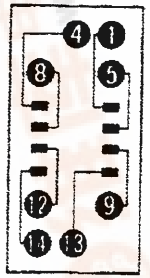

Mounting holes

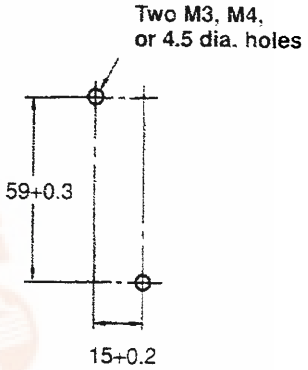

捷多邦，专业PCB打样工厂，24小时加急出货
查询PYF08A-E供应商